SL-HF100ES
RMT-216

SERVICE MANUAL

April, 1984

711B CHASSIS

Refer to separate adjustment manual, part number 9-972-308-81.

SPECIFICATIONS

System

Video recording system
Rotary two-head helical scanning

Audio recording system
Beta hi-fi PAL system (2 channels)
(Recording on the conventional audio track is monaural.)

Video signal: CCIR standards, PAL and DDR SECAM colour

Aerial input: 75-ohm, asymmetrical aerial socket

Stereo/bilingual system
West-German two-carrier system

Channel coverage
VHF: Western European channels E2-E12
UHF: Western European channels E21-E68
(Up to 12 programmes can be preset.)

RF output signal
UHF channels E30 to E39 (variable)
75 ohms, unbalanced

Video

Input: VIDEO IN: BNC connector
1.0 V $^{+1.0}_{-0.5}$ V (p-p)
75 ohms, unbalanced,
sync negative

Output: VIDEO OUT: BNC connector
1.0 V (p-p) ±0.1 V (p-p)
75 ohms, unbalanced,
sync negative

Horizontal resolution
260 lines

Signal-to-noise ratio
Colour: Better than 40 dB
B/W: Better than 43 dB

Audio

Input: AUDIO IN: phono jacks
47 kilohms, −10 dBs
(0 dBs = 0.775 V rms)

Outputs: AUDIO OUT: phono jacks
Load impedance less than 10 kilohms
−10 dBs with 47 kilohms load, unbalanced
PHONES: stereo minijack
−26 dBs, 8 ohms

Beta hi-fi PAL sound

Frequency response
20 Hz to 20 kHz (MPX FILTER OFF)

Wow and flutter
Less than 0.005% WRMS

Dynamic range: More than 80 dB

Video/Audio

Output: AV: 6-pin DIN connector

— Continued on next page —

Beta
VIDEO CASSETTE RECORDER
SONY®

MICROFILM

Consumer VIDEO

Tape transport

Tape speed 18.73 mm/sec.
Maximum recording time
2 hours 10 min. (with Sony L-500 cassette)
3 hours 15 min. (with L-750)
Fast forward/rewind time
Within 5 min. (with L-500)

Timer

Clock Crystal lock
Time indication 24-hour cycle
Timer setting Only for recording
2 events/week, adjustable for any day or for all 7 days of the week
Power back-up Back-up duration of 3 minutes minimum at one time

General

Power requirements
110 - 240 V ac ±10%, 50/60 Hz
Power consumption
38 W
Storage temperature
−20°C to +65°C (−4°F to +149°F)
Operating temperature
5°C to 40°C (41°F to 104°F)
Dimensions Approx. 430 × 105 × 380 mm (w/h/d) (17 × 4¼ × 14¼ inches) including projecting parts and controls
Weight Approx. 10.5 kg (23 lbs 2 oz) net

Accessories supplied

75-ohm coaxial cable for recorder to TV connection 1
Remote Commander RMT-216 with two IEC designation R6 batteries 1
RF channel adjustment tool 1

Design and specifications subject to change without notice.

SAFETY CHECK-OUT

After correcting the original service problem, perform the following safety checks before releasing the set to the customer:

1. Check the area of your repair for unsoldered or poorly-soldered connections. Check the entire board surface for solder splashes and bridges.
2. Check the interboard wiring to ensure that no wires are "pinched" or contact high-wattage resistors.
3. Look for unauthorized replacement parts, particularly transistors, that were installed during a previous repair. Point them out to the customer and recommend their replacement.
4. Look for parts which, though functioning, show obvious signs of deterioration. Point them out to the customer and recommend their replacement.
5. Check the B+ voltage to see it is at the values specified.

SAFETY-RELATED COMPONENT WARNING !!

COMPONENTS IDENTIFIED BY SHADING AND MARK ⚠ ON THE SCHEMATIC DIAGRAMS, EXPLODED VIEWS AND IN THE PARTS LIST ARE CRITICAL TO SAFE OPERATION. REPLACE THESE COMPONENTS WITH SONY PARTS WHOSE PART NUMBERS APPEAR AS SHOWN IN THIS MANUAL OR IN SUPPLEMENTS PUBLISHED BY SONY. CIRCUIT ADJUSTMENTS THAT ARE CRITICAL TO SAFE OPERATION ARE IDENTIFIED IN THIS MANUAL. FOLLOW THESE PROCEDURES WHENEVER CRITICAL COMPONENTS ARE REPLACED OR IMPROPER OPERATION IS SUSPECTED.

TABLE OF CONTENTS

Section	Title	Page
1.	GENERAL	
1-1.	Warning	4
1-2.	Precautions	4
1-3.	Location and Function of Controls	5
1-4.	Adjusting the TV	9
1-5.	TV Station Programming	10
1-6.	Clock Setting	11
1-7.	TV Programme Recording (Beta hi-fi Recording)	12
1-8.	Playback	14
1-9.	Timer-Activated Recording of TV Programmes	16
1-10.	Beta hi-fi Audio Recording	18
2.	DISASSEMBLY	
2-1.	Case and Front Panel Removal	21
2-2.	Power Block Removal	21
2-3.	Timer Block Removal	22
2-4.	FL Cassette Compartment Assembly Removal	22
2-5.	Removal of Mechanical Chassis Block (1)	23
2-6.	Removal of Mechanical Chassis Block (2)	23
2-7.	Reel Ass'y Removal	24
2-8.	The YC-28 Board Removal	24
2-9.	Interval View	25
3.	DIAGRAMS	
3-1.	Circuit Boards Location	26
3-2.	Overall Block Diagram	27
3-3.	Video System Block Diagram	30
3-4.	Video Y Block Diagram	33
3-5.	Video Chroma Block Diagram	34
3-6.	Servo System Block Diagram	35
3-7.	System Control Block Diagram	37
3-8.	System Control Circuit and Mechanism Block Interface	39
3-9.	System Control Circuit and Remote Control/ Timer Circuit Interface	39
3-10.	System Control Circuit and Function Block Interface	40
3-11.	System Control Circuit and Its Peripheral Circuit Interface	40
3-12.	System Control Circuit and Reel Motor Control Circuit Interface	42
3-13.	System Control Circuit and Video Circuit Interface	42
3-14.	System Control Circuit and Servo Circuit Interface	43
3-15.	System Control Circuit and Audio Circuit Interface	43
3-16.	Capstan Phase System Timing Chart (REC)	45
3-17.	Capstan Phase System Timing Chart (PB)	46
3-18.	Capstan Speed System Timing Chart	47
3-19.	Drum Phase System Timing Chart	47
3-20.	Drum Speed System Timing Chart	48
3-21.	PG Signal Timing Chart	48
3-22.	Audio Block Diagram	49
3-23.	Audio Level Diagram (REC)	51
3-24.	Audio Level Diagram (PB)	51
3-25.	AFM Level Diagram (REC)	52
3-26.	AFM Level Diagram (PB)	52
3-27.	Timer Block Diagram	53
3-28.	Tuner Block Diagram	55
3-29.	Power Block Diagram	57
4.	SCHEMATIC DIAGRAM AND PRINTED WIRING BOARDS	
4-1.	Frame Schematic Diagram	59
4-2.	RP-17 and YC-28 Boards	63
4-3.	SS-28, FU-22(½), TR-14, RD-6, RD-7, LM-8, CS-3, CS-4, PT-7(½) Capstan Motor and Reel Motor Boards	72
4-4.	AF-3, AM-5, RL-18, FU-22(½), PT-7(½), HP-7, SW-31, SV-12 Boards and Level Meter Unit	82
4-5.	TU-60, MT-4, TM-54, TM-55 and N Boards	91
4-6.	SR-19E (Power Supply)	99
4-7.	Semiconductors	103
4-8.	VHF/UHF Tuner Schematic Diagram	105
5.	EXPLODED VIEWS	
5-1.	Front Panel and Cabinet Assembly	106
5-2.	Power Assembly	107
5-3.	Timer Assembly	108
5-4.	Tuner Assembly	109
5-5.	Front Loading Assembly	110
5-6.	Reel Table Assembly	111
5-7.	Chassis Assembly (1)	112
5-8.	Chassis Assembly (2)	113
5-9.	Drum and S Loading Assemblies	114
5-10.	Hardware List	115
6.	ELECTRICAL PARTS LIST	116
	REMOTE COMMANDER RMT-216	149

SECTION 1
GENERAL

1-1. WARNING

To prevent fire or shock hazard, do not expose the unit to rain or moisture.

To avoid electrical shock, do not open the cabinet. Refer servicing to qualified personnel only.

1-2. PRECAUTIONS

On safety

- This unit operates on 110 - 240 V ac, 50/60 Hz.
- Should any solid object or liquid fall into the cabinet, turn off the unit and have it checked by qualified personnel before operating it any further.
- To disconnect the mains lead (ac power cord), pull it out by the plug. Never pull the lead itself.

On installation

- Allow adequate air circulation to prevent internal heat build-up. Do not place the unit on surfaces (rugs, blankets, etc.) or near materials (curtains, draperies) that may block the ventilation grille.
- Do not install the unit near heat sources such as radiators or air ducts or in a place subject to direct sunlight, excessive dust, mechanical vibration or shock.
- The unit is designed for operation in a horizontal position. Do not install it in an inclined position.
- Keep the unit and cassette tapes away from equipment with strong magnets, such as a microwave oven, large loudspeakers, etc.

On operation

- When the unit is not to be used for a long period, turn off the POWER switch on the rear to conserve energy and to extend the useful life of your unit.
- Remove and store video cassettes after recording or playback.

On cleaning

Clean the cabinet, panel and controls with a dry soft cloth. Do not use a moistened cloth or any type of solvent, such as alcohol or benzine, which might damage the finish.

On repacking

Do not throw away the carton and packing materials. They make an ideal container in which to transport the unit. When shipping the unit to another location, repack it as illustrated on the carton.

On colour broadcasting systems

This machine is designed to record and playback using the PAL and DDR SECAM colour standards. Recording and playback of video sources based on other colour systems cannot be guaranteed.

1-3. LOCATION AND FUNCTION OF CONTROLS

Front

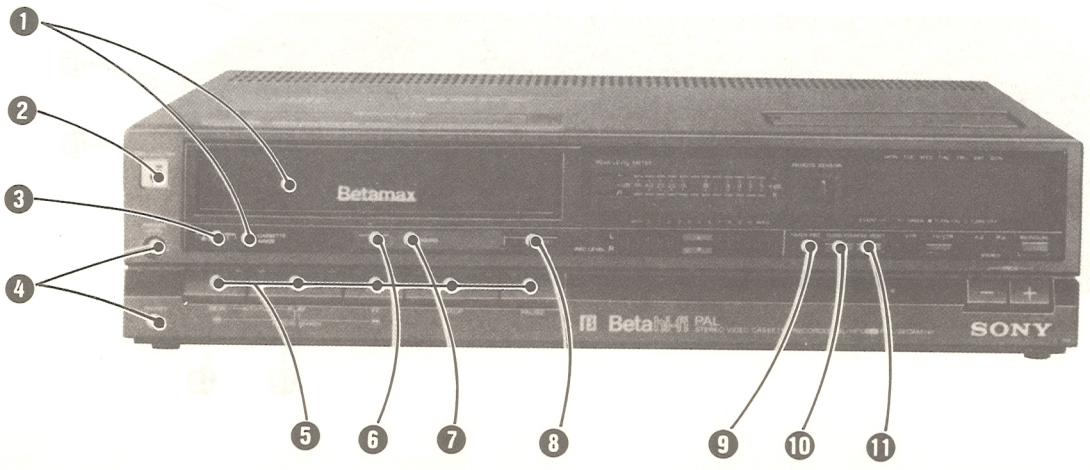

❶ Cassette compartment and CASSETTE INSIDE lamp
Insert a cassette after turning on the recorder. The lamp lights up when a cassette is inside.

❷ ON/STANDBY button and lamp
Press to turn on the unit. The lamp will light up. Press again to turn it off.
The timer section will continue to operate and the time will be displayed even if the ON/STANDBY button is off so long as the POWER switch is depressed (ON).

❸ ⏏ EJECT button
Press to remove the cassette. This button does not function when the recorder is turned off.

❹ PHONES jack and PHONES LEVEL control
Connect headphones to the PHONES jack (stereo mini-jack) to monitor the sound. The PHONES LEVEL control adjusts the headphone volume.

❺ Function buttons
◀◀ REW button : Press to rewind the tape. Also used for the reverse picture search and skip scan operation.
▶ PLAY button : Press to play the tape back.
▶▶ FF button : Press to advance the tape rapidly. Also used for the forward picture search and skip scan operation.
■ STOP button : Press to stop the tape.
❚❚ PAUSE button : Press to stop the tape for a moment during recording or playback. A still picture will be seen during playback. Press again to release the pause mode.

❻ Beta hi-fi lamp
Lights to show Beta hi-fi recording, or playback of a Beta hi-fi recorded tape regardless of the BETA Hi-Fi selector's position.

❼ SOUND lamp
When the RECORD mode selector is set to SOUND, this lamp lights to show audio recording. It also lights when a tape with audio signals only is being played back.

❽ RECORD button and lamp
Press to start recording. The lamp will light up.

❾ TIMER REC lamp
Lights when the TIMER REC button behind the front panel is pressed to set the recorder in the timer stand-by mode. It remains lit till the timer recording is finished.

❿ CLOCK/COUNTER button
Press to set the display to the tape counter. To reset to clock, press it again.

⓫ RESET button
Press to set the tape counter reading to "0000".

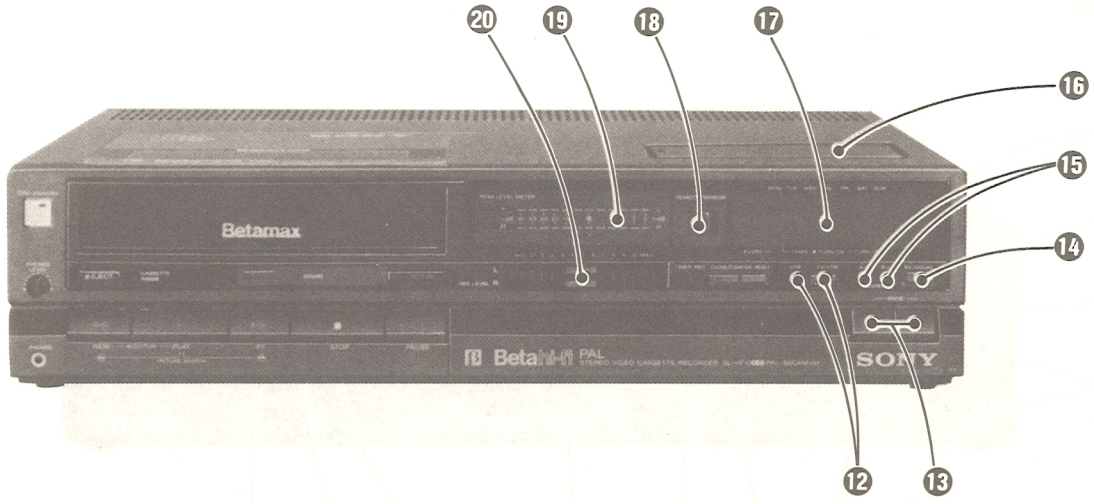

⑫ TV/VTR select button and VTR lamp (behind the front panel)
This button is operable when a TV is connected to the recorder's AV connector.
To view a TV programme selected by the PROG buttons on the recorder or to monitor the picture being recorded, press this button so that the VTR lamp lights up. When the PLAY button on the recorder is pressed, the recorder is automatically set in the VTR mode. To view a TV programme in the usual manner, press this button so that the lamp goes off. When the recorder is turned off, the recorder is automatically set in the TV mode.

⑬ PROG (programme) select buttons
Select the number of the programme to be recorded or to be viewed. Press + for higher-numbered programmes, and – for lower-numbered programmes. The selected programme number will appear in the display window.

⑭ BILINGUAL select button
Selects the language of the bilingual TV programme.

⑮ STEREO A, B lamps
When a stereo TV programme is being received, both lamps light up. When a bilingual programme is being received, either A or B lamp lights up. These lamps do not activate when a pre-recorded stereo or bilingual tape is played.

⑯ Tuning compartment
All the switches and buttons for programming stations are in this compartment.

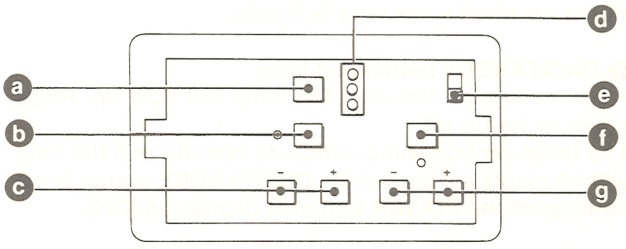

ⓐ **RESET button:** To clear the programmed station, press this button.
ⓑ **AFT button and lamp:** The AFT circuit activates automatically after the stations are tuned and memorized with automatic and manual programming. The AFT lamp will illuminate. If you wish to restore the AFT on the channel which has been fine-tuned manually with the FINE buttons, press the AFT button.
ⓒ **FINE + and – buttons:** Press to fine tune the station.
ⓓ **Tuning indicator:** Indicates the approximate position of the tuned station within the tuning band scanned.
ⓔ **TEST SIGNAL switch:** Set to ON to obtain a test pattern.
ⓕ **AUTOMATIC PROGRAMMING button and lamp:** To preset the receivable stations automatically, press this button. The corresponding lamp blinks during automatic and manual programming.
ⓖ **SEARCH + and – buttons:** Press to tune in a station. Press the – button to get a station of lower frequency and the + button to get a station of higher frequency.

⑰ Display window

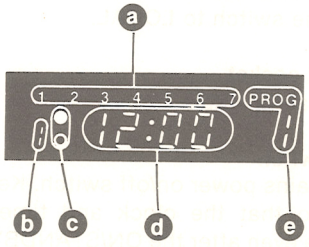

- ⓐ **Day of the week indication:** Shows the day of the week on which the timer-activated recording will take place.
- ⓑ **Event number**
- ⓒ **Turn-on and turn-off setting indications:** The "●" mark shows you are setting the turn-on time and the "○" mark shows the turn-off time.
- ⓓ **Time and counter display:** Usually shows the present time.
  When the CLOCK/COUNTER button is pressed to COUNTER, the display shows the counter number.
- ⓔ **Programme number:** Shows the programme number selected with the PROG buttons.
  When the INPUT SELECT switch is set to LINE/CAMERA to record signals from the VIDEO IN and AUDIO IN jacks, the indication will change to "AU".

⑱ REMOTE SENSOR
Detects the remote control signal transmitted from the supplied Remote Commander.

⑲ PEAK LEVEL METER
When the LEVEL METER switch is set to ON, these meters show the peak input level of each channel (left and right) during Beta hi-fi recording, and recording levels during playback.

⑳ REC LEVEL (recording level) controls
These controls adjust the audio recording level on the Beta hi-fi recording. The R control is for the right channel, and L is for the left channel. Normally set to 5 (green position) for recording TV programmes. When you are recording audio signals from other audio equipment, adjust manually to the correct position for the optimum result.

Behind front panel

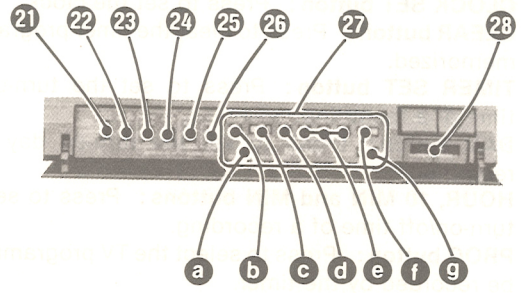

㉑ INPUT SELECT switch
Select the programme to be recorded.
LINE/CAMERA: for recording signals connected to the VIDEO IN and AUDIO IN jacks.
TUNER: for recording TV programmes.
SIMUL: for recording FM simulcast programmes or timer-activated audio recording.

㉒ LEVEL METER switch
Set to ON to illuminate the peak level meters. Set to OFF to turn the illumination off.

㉓ RECORD mode selector
VIDEO: Normally, set to this position. Sound and picture are recorded on the Beta hi-fi system.
SOUND: Set to this position to record sound only with the Beta hi-fi system.

㉔ MPX FILTER (multiplex filter) switch
Normally set to ON for Beta hi-fi recording. The multiplex filter cuts off the high-frequency signals which sometimes grate on the ear. If you wish to record without cutting the high frequencies, set to OFF.

㉕ BETA Hi-Fi selector
Selects the video track or the audio track for sound playback.
AUTO: Normally, set to this position. The recorder will automatically select the video track for Beta hi-fi recorded tapes, or the audio track for tapes recorded without the Beta hi-fi system.
NORMAL: Set to this position when you wish to listen to the sound recorded on the audio track of a Beta hi-fi recorded tape.

㉖ TONE selector
This selector is only effective with sound recorded on the audio track. Normally, set to HIGH. If the high frequencies of playback sound seem exaggerated, set to LOW.

㉗ Timer setting section

- ⓐ **CLOCK SET button:** Press to set the clock.
- ⓑ **CLEAR button:** Press to clear the timer programme memorized.
- ⓒ **TIMER SET button:** Press to set the turn-on/off time of a recording.
- ⓓ **DAY button:** Press to set the turn-on day of a recording.
- ⓔ **HOUR, 10 MIN and MIN buttons:** Press to set the turn-on/off time of a recording.
- ⓕ **PROG button:** Press to select the TV programme to be recorded by the timer.
- ⓖ **TIMER REC button:** Press to set the recorder in the timer recording stand-by mode.

㉘ TRACKING control
If streaks or snow appear during the playback of a tape recorded on another recorder, turn this knob to obtain the best possible picture.

Rear

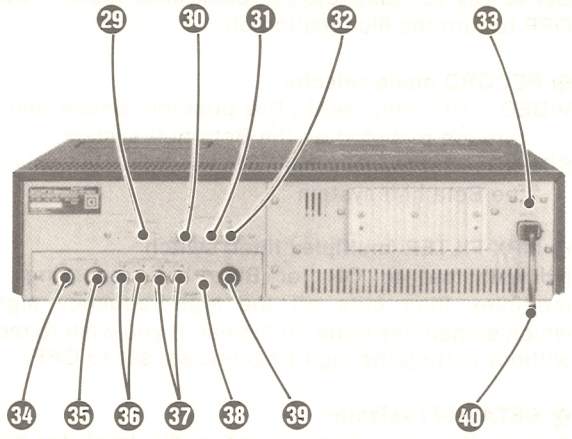

㉙ RF CHANNEL screw
If there is interference on the factory-preset channel for RF output and the signal of this recorder cannot be displayed clearly on the TV screen, adjust this screw with the supplied screwdriver.

㉚ AERIAL OUT socket
Connect the aerial input of the TV receiver using the supplied cable.

㉛ DX/LOCAL switch
Normally set this switch to DX. If the TV signal is very strong, set the switch to LOCAL.

㉜ AERIAL IN socket
Connect the aerial cable.

㉝ POWER switch
This is the mains power on/off switch. Keep this switch depressed so that the clock and timer section will remain active even after the ON/STANDBY button is off. When this switch is released (OFF), the preset time and timer settings are all cleared.

㉞ VIDEO OUT jack (BNC type)
Connect to the video input of another video cassette recorder or a video monitor.

㉟ VIDEO IN jack (BNC type)
Connect to the video output of a camera, another video cassette recorder, etc.

㊱ AUDIO OUT jacks (phono type)
Connect to the audio inputs of a video monitor or video cassette recorder, or to the auxiliary inputs or tape input of a stereo amplifier.

㊲ AUDIO IN jacks (phono type)
Connect to the audio outputs of a camera or another video cassette recorder, or to the recording outputs of a stereo amplifier.

㊳ CAMERA REMOTE jack (special minijack)
For camera recording, connect an ac adaptor to this jack.

㊴ AV connector (6-pin, DIN)
Connect to the 6-pin or 8-pin DIN connector of a TV receiver or colour monitor. This connector provides the video and audio output signal.

㊵ AC mains lead

1-4. ADJUSTING THE TV

One of the television programme positions must be adjusted to receive the signal from the recorder.

1 After making the connections, press the ON/STANDBY button.
2 Make sure that the recorder is in the stop mode and the TV is in TV mode.
3 Set the TEST SIGNAL switch in the tuning compartment of the recorder to ON. The test signal is transmitted on a channel between UHF channels 30 and 39.
4 Turn on the TV and select a programme position which is not being used to receive a TV station. Tune the channel until you see a clear black and white pattern on the TV screen and you hear a continuous tone. This is the recorder's test signal.

—If you are not sure how to adjust your TV, please refer to the TV's instruction manual or consult your dealer.

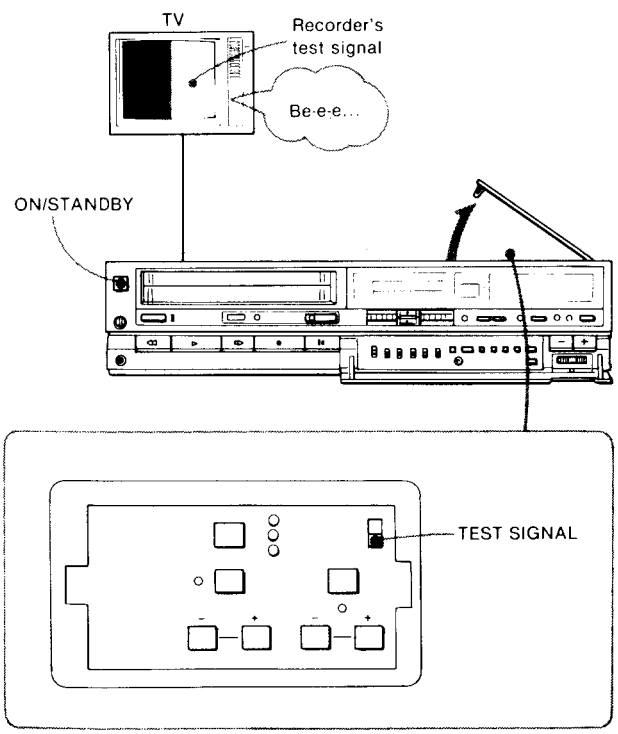

Whenever you use the video recorder, you should set the TV to the programme position selected in this adjustment.

If the test picture is free of disturbance, the TV adjustment is complete. Set the TEST SIGNAL switch to OFF.

If the test picture is not free of disturbance
1 Reset the TEST SIGNAL switch to OFF.
2 Adjust the channel of the TV to a channel between UHF channels 30 and 39 with the tuning control or the fine tuning control on the TV, so that the TV screen shows no picture and so that a steady rustling sound or no sound is heard.
3 Set the TEST SIGNAL switch to ON again.
4 Slowly turn the RF CHANNEL screw on the back of the recorder with the supplied screwdriver, until you see an undistorted test pattern on the TV screen.
5 Now the TV adjustment is complete. Reset the TEST SIGNAL switch to OFF.

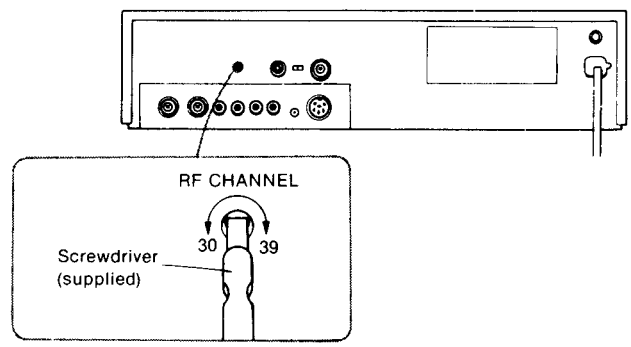

1-5. TV STATION PROGRAMMING

Automatic and manual programming is available. Automatic programming automatically presets up to 12 receivable stations from the lowest frequency to the highest. Manual programming is useful for presetting selected stations in any desired sequence.

To start programming, turn on the recorder by pressing the ON/STANDBY button and set the INPUT SELECT switch to TUNER.

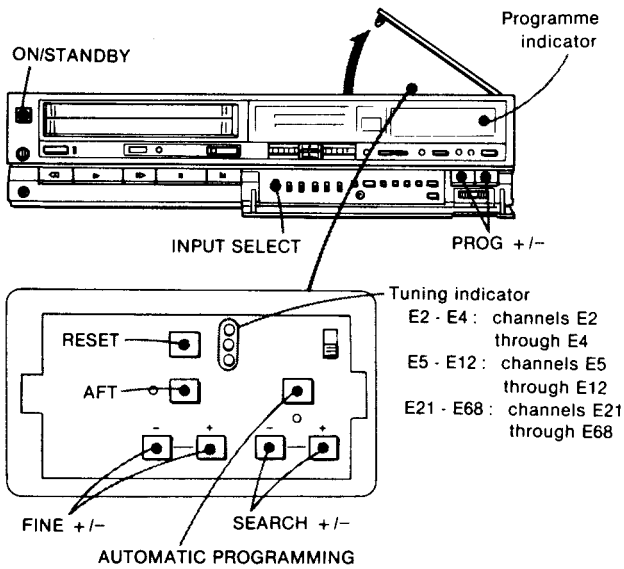

AUTOMATIC PROGRAMMING

Press the AUTOMATIC PROGRAMMING button. Up to 12 receivable stations will be preset one by one from programme position 1. When no more stations can be located, programme number "1" will light on the programme indicator and automatic programming will stop.

MANUAL PROGRAMMING

1 Press the + or – PROG button to select the programme position.
  + for a higher-numbered programme position
  – for a lower-numbered programme position

2 Press the + SEARCH button to locate a station with higher frequency and the – SEARCH button to locate a station with lower frequency. The tuning indicator will light to show the current tuning band. When a station has been received, the search will stop. Press the + or – SEARCH button again, until the desired station is received.

Repeat these steps for all desired stations.

FINE TUNING OF A WEAK STATION

If the picture on a particular programme position is not acceptable, keep the + or – FINE button pressed until the picture becomes clearer. When either of the FINE buttons is pressed, the AFT of the selected station is deactivated and the AFT lamp goes off. To view this particular station, keep the AFT deactivated. (Do not press the AFT button.)
When other memorized stations are selected, the AFT automatically activates.

ELIMINATING NOISE ON UNUSED PROGRAMME POSITIONS

Simply press the RESET button. The annoying noise will be eliminated.

1-6. CLOCK SETTING

When you connect the mains lead to a wall outlet, the clock indicates "0 : 00" with the two dots blinking.

Example : To set the clock to 7 : 35 p.m. (19 : 35) on Tuesday*

*** Time indication**

AM				PM					
12 : 00 (midnight)	1 : 00		11 : 00	12 : 00 (noon)	1 : 00	2 : 00		10 : 00	11 : 00
↓	↓		↓	↓	↓	↓		↓	↓
0:00	1:00		11:00	12:00	13:00	14:00		22:00	23:00

Day indication

Monday	Tuesday	Wednesday	Thursday	Friday	Saturday	Sunday
↓	↓	↓	↓	↓	↓	↓
1	2	3	4	5	6	7

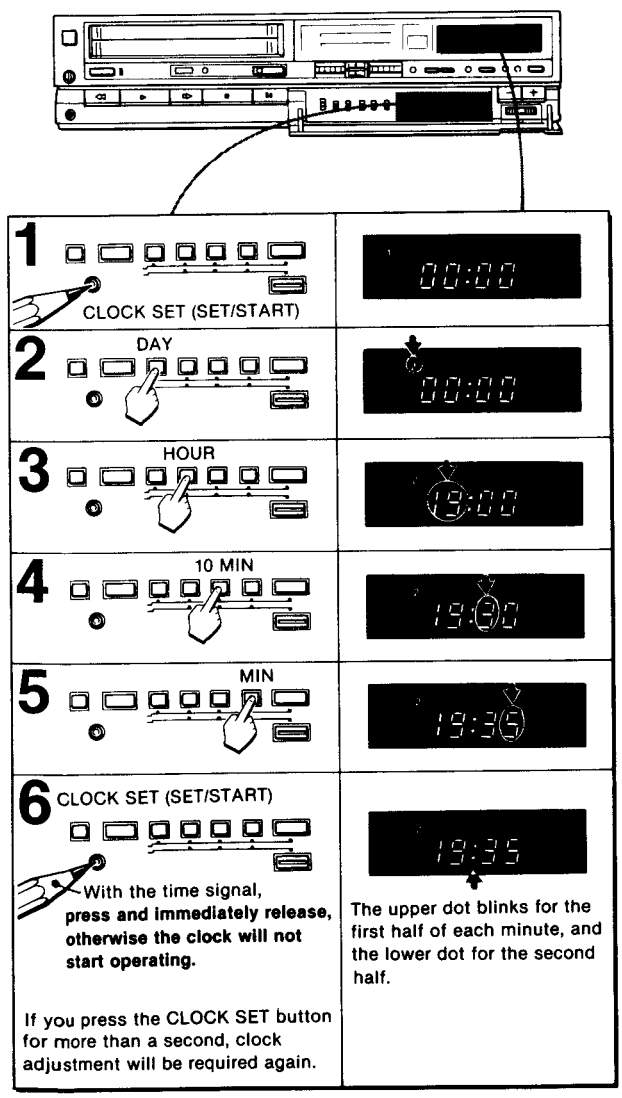

The DAY, HOUR, 10 MIN and MIN buttons can be pressed in two ways

When you hold a button down, the digits will advance continuously until the button is released.

When you press and immediately release a button, the digits will advance by one.

Zero second adjustment

Press the CLOCK SET button quickly (less than a second).

While the upper dot is blinking, the clock is set to the time displayed 00 second. For example, if the clock time is 7 : 30, 20 seconds, it is set to 7 : 30, 00 second.

While the lower dot is blinking, the clock advances one minute and is set to the time displayed 00 second. For example, if the clock time is 7 : 30, 40 seconds, it is set to 7 : 31, 00 second.

If you press the CLOCK SET button for more than a second, "0 : 00" blinks to show that the clock adjustment is required again.

When power has been interrupted for more than 3 minutes, the time indication "0 : 00" blinks, showing that the clock must be reset.

If power has been interrupted for less than 3 minutes, the displayed time remains correct.

Note : If the POWER switch is released (OFF), the same result will be obtained as in power interruption.

1-7. TV PROGRAMME RECORDING (Beta hi-fi recording)

Check before recording

The green position is the standard setting position for Beta hi-fi recording.

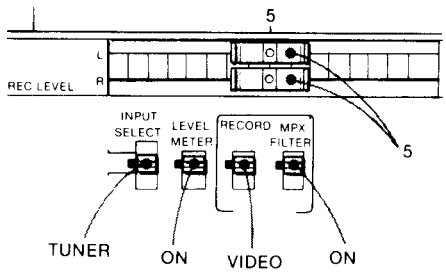

1 Turn on the TV and select the programme position for the video recorder.

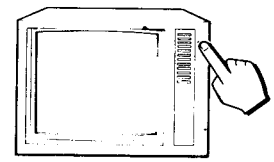

2

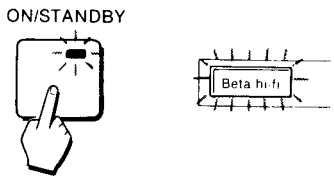

3 Insert the cassette with the round window to the left.

Do not use force when inserting the cassette into the compartment.

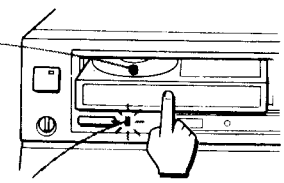

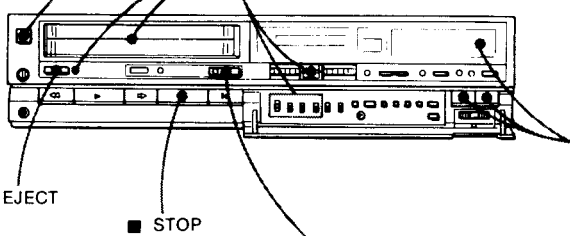

4 Select the programme to be recorded.

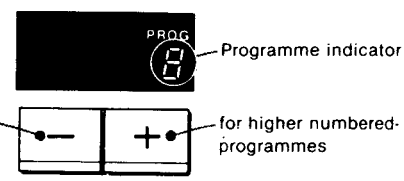

5 Press the RECORD button. Recording will begin.

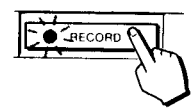

If the inserted cassette does not have the safety tab, or if the tape is at its end, the cassette will be automatically ejected.

You can view another TV programme while recording, by simply selecting the programme you want to view with the TV's programme selector.

To stop recording

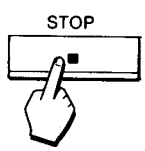

To eject the cassette

Press after stopping the recording.

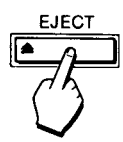

When the tape reaches the end during recording, it will be automatically rewound to the beginning.

TO STOP RECORDING MOMENTARILY

Press the ❚❚ button. The lamp on the button will light. The TV programme can be seen on the TV, but the picture will not be recorded.
To resume recording, press the ❚❚ button again.
To protect the video heads and the tape, the pause mode will be automatically released after about 8 minutes and recording will stop.

TO KEEP A RECORDED PROGRAMME FROM BEING ACCIDENTALLY ERASED

When a new recording is made on a previously recorded cassette, the previous recording will be automatically erased.

To avoid erasing a recording
Break off the safety tab using a screwdriver or similar object.

To re-record on a cassette which has had the safety tab removed
Cover the slot with a piece of plastic tape.

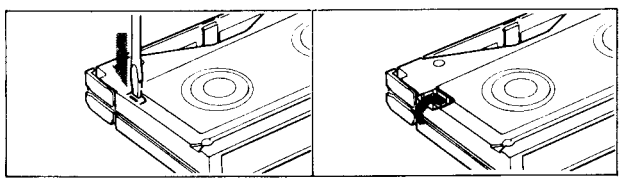

RECORDING A STEREO OR BILINGUAL PROGRAMME

When the STEREO A and B lamps light up, a stereo programme is being received. The recording procedure is the same as in TV programme recording.

If either the A or B lamp lights up, a bilingual programme is being received. Select the local language (usually broadcast on channel A) or the original language (usually broadcast on channel B) with the BILINGUAL select button.

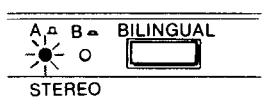

USE OF THE TAPE COUNTER

Turn on the power and press the CLOCK/COUNTER button to display the counter reading in the display window.
To return the display to the present time, press the CLOCK/COUNTER button again.

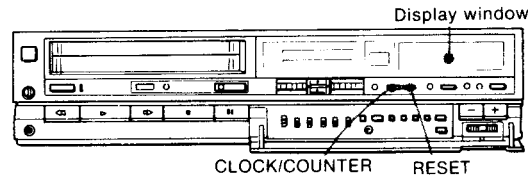

Before starting recording or playback, press the RESET button to set the counter to "0000".
By noting the counter reading at the desired point, you can easily find that point later by referring to the counter.

Normal rewinding will stop at the tape counter's "0000" position. To rewind the tape further, press the ◀◀ button again.
With automatic rewinding from the tape end or for "auto play", the tape will not stop at the counter's "0000" position.

Notes
- The counter reading is automatically reset to zero when a cassette is newly inserted.
- While the power is off, the display shows the present time, regardless of the CLOCK/COUNTER button setting.
- The counter reading will be retained in the memory even after the power is turned off, as long as the cassette is in the cassette compartment.
- The tape counter does not operate when a blank, unrecorded tape is played.

1-8. PLAYBACK

1

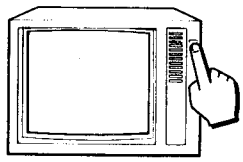

Turn on the TV and select the programme position for the video recorder.

2 ON/STANDBY

3 Insert the cassette with the round window to the left.

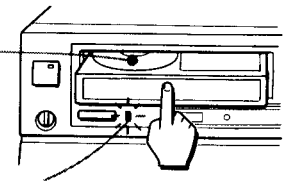

Lights when a cassette is inside.

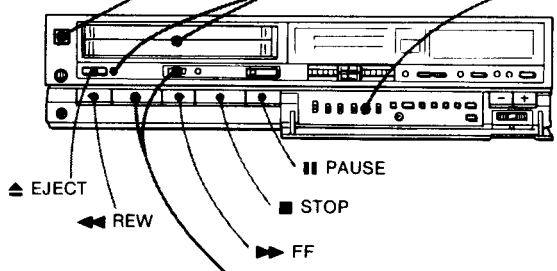

4 Usually set to AUTO.

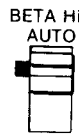

For details, see "Beta HiFi selector" on page 15.

5 Press the ▶ button. Playing will begin.

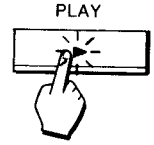

Lights during playback of a Beta hi-fi recorded tape.

To stop playback

STOP

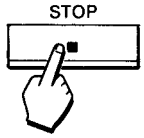

To eject the cassette

EJECT

To rewind the tape

REW

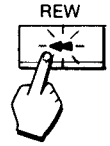

To advance the tape rapidly

FF

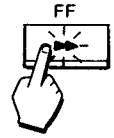

To stop the playback momentarily

PAUSE

A still picture will be seen on the TV screen. To resume playback, press the button again. The pause mode will be automatically released after about 8 minutes and the playback will resume.

When the tape reaches the end during playback, it will be automatically rewound to the beginning.

PICTURE SEARCH

—Viewing the picture at high speed to find a particular scene

During playback, keep the ◀◀ or ▶▶ button pressed to reverse or advance the picture at high speed. Release the button at the desired point. Normal playback will resume. The picture search mode can also be assured directly from the pause mode.

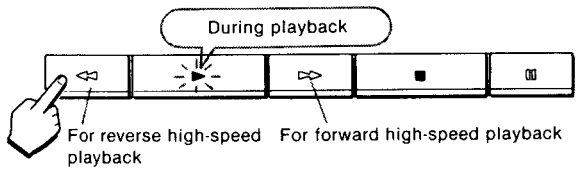

SKIP SCAN

—Viewing the picture momentarily in the fast-forward or rewind mode

During rewind mode, keep the ◀◀ button pressed for high-speed picture reverse. **During fast forward mode,** keep the ▶▶ button pressed for high-speed picture advance. The picture appears momentarily while either of the buttons is pressed. Release the button at the desired point. Normal rewind or fast forward mode will resume.

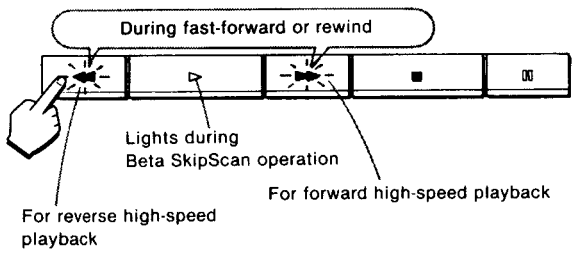

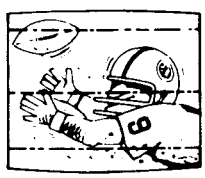

Streaks will appear during the picture search, the skip scan and the pause modes.

WHEN PLAYING BACK A TAPE RECORDED ON ANOTHER MACHINE

- A tape recorded on a machine without a Beta hi-fi system is played back in the conventional way.
- If streaks or snow appear during playback of a tape recorded on another recorder, adjust the TRACKING control for the best possible picture. Return the control to the centre position after playing back the tape.
- If the sound of a tape recorded on another Beta hi-fi recorder cannot be heard, adjust the TRACKING control.

AUTO PLAY

—To rewind the tape and automatically play it back

Press the ▶ button and ◀◀ button simultaneously in the stop mode. The lamps on these buttons blink alternately during rewinding. After the tape is completely rewound, it will be automatically played back.

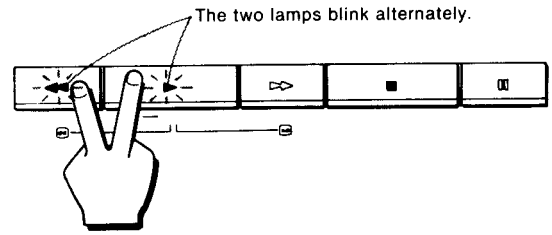

SELECTION OF PLAYBACK SOUND

BETA Hi-Fi selector

Normally, set this selector to AUTO. The sound recorded on the video track of Beta hi-fi recorded tapes, or the sound recorded on the audio track of non-Beta hi-fi recorded tapes will automatically be played back.
If you wish to listen to the sound recorded on the audio track of a Beta hi-fi recorded tape, set the selector to NORMAL. Return the selector to AUTO after playing back the tape.

Playback sound and [Beta hi-fi] lamp

	Beta hi-fi recorded tape		Non Beta hi-fi recorded tape	
BETA Hi-Fi AUTO	Sound on video track (Beta hi-fi recorded)	Beta hi-fi	Sound on audio track	Beta hi-fi
NORMAL	Sound on audio track	Beta hi-fi		

*The [Beta hi-fi] lamp lights to show that a Beta hi-fi recorded tape is being played back.

TONE selector

This selector is effective only with sound recorded on the audio track. Normally set the selector to HIGH. If the high frequencies of the playback sound seem exaggerated, set to LOW. Return the selector to HIGH after playing back the tape.

1-9. TIMER-ACTIVATED RECORDING OF TV PROGRAMMES

You can make one or two recordings within 7 days even when you are not at home. These recordings are identified as event 1 or event 2.

Note: The timer cannot be set during recording, playback, or when the INPUT SELECT switch is set to LINE/CAMERA (The "AU" appears on the display window).

Example: To record a PROG 2 broadcast from 9:00 AM to 11:25 AM on Friday for event 1.

Check before setting the timer

- Is the clock set to the correct day and correct time? Timer setting can only be made after the clock has been set.
- Is a cassette inserted in the recorder?
- Is the cassette long enough to record the programmes?
- Does the cassette have a safety tab on the bottom?
- Is the INPUT SELECT switch set to TUNER?

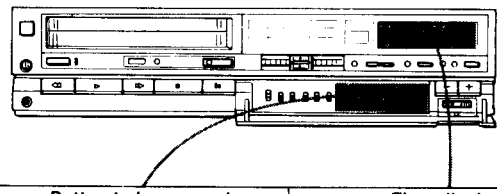

1 Button to be pressed

TIMER SET

If the recorder is off, it will be turned on automatically.

Time display

The segment to be set will blink.

Turn-on indication

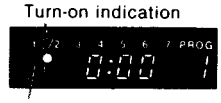

Shows the event number. Event 1 always appears first.

2 Select the turn-on day.

DAY

Indication changes as follows:
1234567 (everyday) → 1 (Monday) → 2 (Tuesday)... → 7 (Sunday)

3 Set the turn-on time.

H 10M M

❶ ❷ ❸

4 Select the programme to be recorded.

PROG

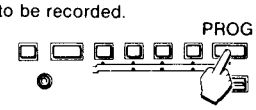

For a bilingual programme, select the language to be recorded.

BILINGUAL

A B

5 TIMER SET

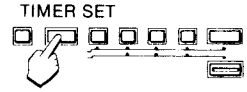

Turn-off indication

Blinks.

6 Set the turn-off time.

H 10M M

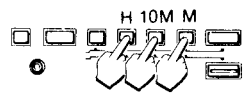

❶ ❷ ❸

7

TIMER REC

TIMER REC ON/OFF

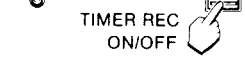

The TIMER REC lamp lights up and the power is turned off.
At the preset turn-on time, recording will start automatically and will stop at the preset turn-off time.

If the inserted cassette is at its end or does not have the safety tab, the cassette will be automatically ejected.

Present day and time

TIMER REC

ONCE THE TIMER REC LAMP HAS LIT UP, NO FUNCTION OF THE RECORDER CAN BE ACTIVATED,except for checking the timer setting.
To operate the recorder after setting the timer for recording, press the TIMER REC buton so that the TIMER REC lamp goes off. To reactivate the timer recording standby mode, be sure to press the TIMER REC button again.

To record to the end of the tape
Set the turn-off time to a time after the tape will reach its end.

If the tape reaches the end during the timer recording
The recording will stop and the tape will be rewound to the beginning. Then after about a second, the recorder will be turned off.

To stop the on-going timer recording
Press the TIMER REC button so that the TIMER REC lamp goes off. The unit will be turned off automatically after about a second.

To erase the setting of an event
1 Press the TIMER SET button to display the event to be erased.
2 Press the CLEAR button. This event will be erased from the memory.

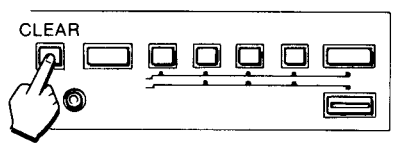

When a power interruption occurs before or during timer recording

If the clock shows "0 : 00" and the dots blink
All the timer settings have been erased. Reset the clock time and the timer settings.

If the clock still shows the correct time but the dots blink
The power has been interrupted for less than 3 minutes. The timer programmes are retained in the memory and the on-going timer recording will resume when the power is resupplied.
To stop the blinking, press any button in the timer-setting compartment.

ERROR INDICATIONS

If the ● and ○ indications as well as the event numbers blink when the TIMER REC button is pressed...
It means that the setting of these events overlap. Check the settings and eliminate the overlap.

Example :

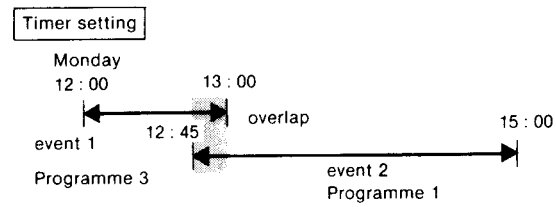

Even with this error indication, recording can be made.
In this case, the first preset recording continues to its turn-off point and then the next recording begins.

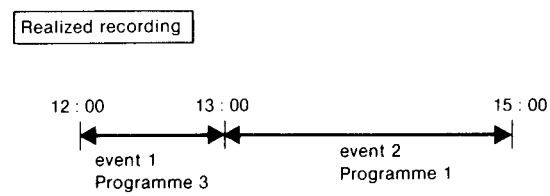

If the turn-on time of the 2 events is the same, recording of event 1 will be made.

TO CHECK THE TIMER SETTING

Press the TIMER SET button. Each time you press the button, the indication will change as follows :
Example : Both event 1 and 2 have been programmed. Turn-on day and time of event 1 → Turn-off day and time →Turn-on day and time of event 2 → Turn-off day and time →Present time
During actual timer recording, only the turn-off time of the event being recorded can be checked.

1-10. BETA HI-FI AUDIO RECORDING

You can record only audio signals without recording pictures.

CONNECTION TO AN AUDIO SYSTEM

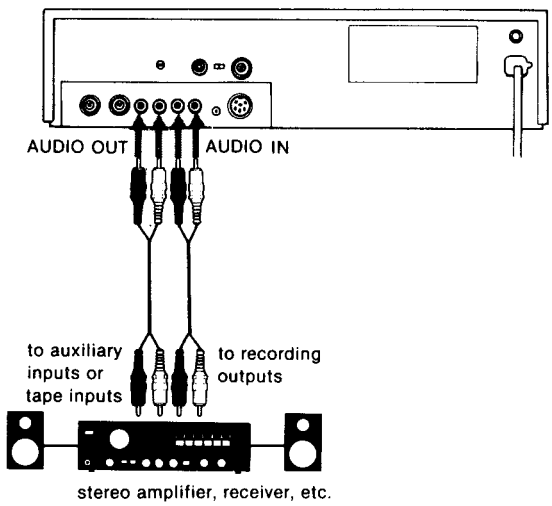

Note
When the TV aerial input socket is connected to the recorder AERIAL OUT socket, the recorded TV programme's sound may not be heard if pictures are not recorded on the tape. Listen to the sound through the equipment connected to the AUDIO OUT jacks.

TO RECORD FROM THE AUDIO SYSTEM

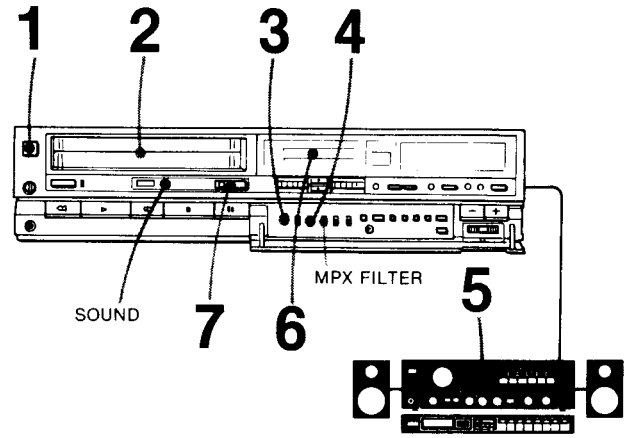

1 Press the ON/STANDBY button.
2 Insert a cassette.
3 Set the INPUT SELECT switch to LINE/CAMERA.
4 Set the RECORD mode selector to SOUND.
The SOUND lamp lights to show audio recording.
5 Turn the power on and play the programme source to be recorded.
6 Set the LEVEL METER switch to ON, and adjust the recording level with the REC LEVEL controls.
(See "RECORDING LEVEL ADJUSTMENT" on page 19.)
7 Press the RECORD button. Recording will begin.

MPX FILTER (multiplex) switch
When recording from an FM tuner, set this switch to ON to cut off the high- frequency signals which sometimes grate on the ear. To record without cutting the high frequencies, set this switch to OFF.

RECORDING LEVEL ADJUSTMENT

When recording on the Beta hi-fi system, the recording level of the left and right channels can be adjusted with the REC LEVEL controls.
In most cases, when you record TV programme sound, the proper recording level is obtained by setting the REC LEVEL controls at 5 (green position).
When you record a sound source with a wide dynamic range, manually adjusting the recording level may result in a better recording.
If the recording level setting is too high, the sound will be distorted, and if the setting is too low, a noisy recording will result. The recording level should be set as high as possible while avoiding distortion.

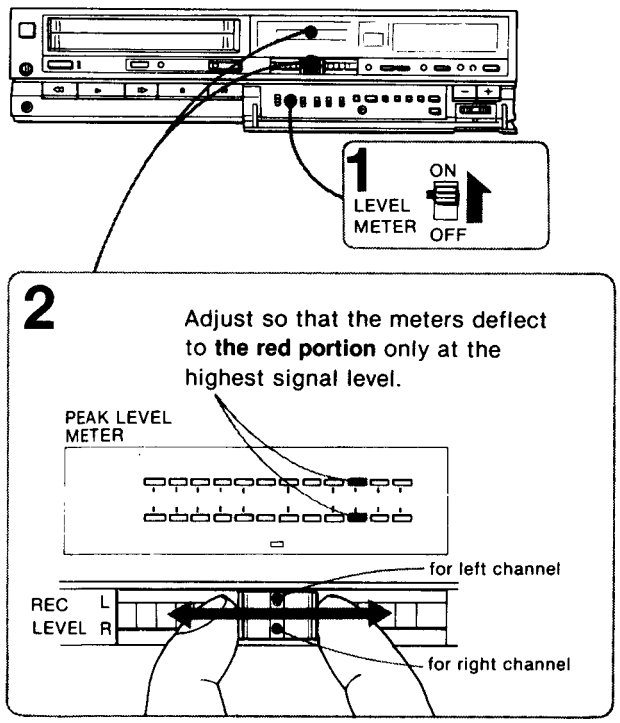

TIMER-ACTIVATED AUDIO RECORDING

Use an optional programme timer for turning on/off the audio system.

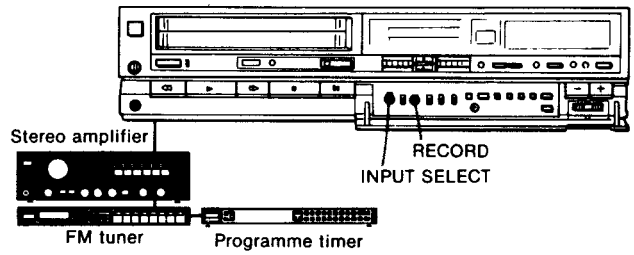

1 Make sure that the clock built into the recorder and the programme timer clock are set to the correct day and time.
2 Set the INPUT SELECT switch of the recorder to SIMUL.
3 Set the RECORD mode selector to SOUND.
4 Preset the turn-on day and time, and the turn-off time in both timers.
For presetting the recorder timer, see page 16.

At the preset turn-on time, audio recording will start automatically and will stop at the preset turn-off time.

FM SIMULCAST RECORDING

By connecting an FM tuner to the AUDIO IN jacks when a TV aerial is connected, you can record the FM simulcast TV programmes (stereo sound transmitted from an FM radio station) while recording the TV programme pictures (video signals) from the TV aerial inputs.

Connection

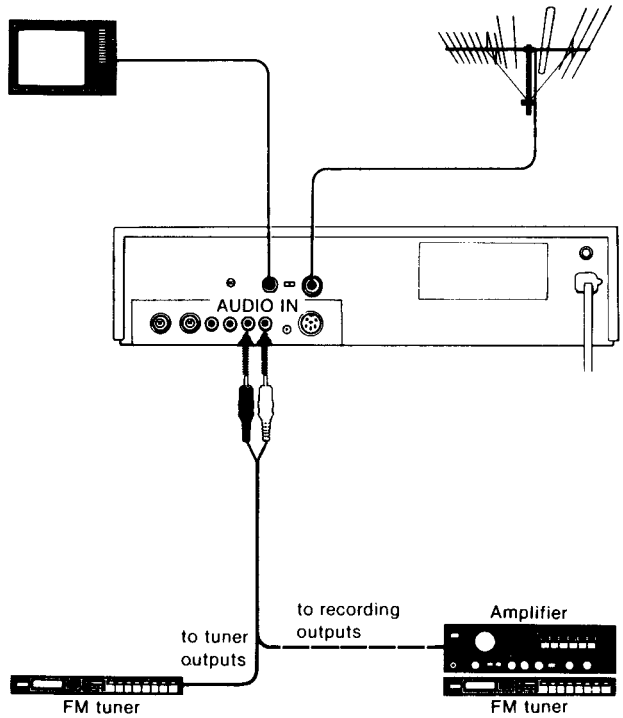

Recording

1 Tune in the station you wish on the recorder and the FM tuner.
2 Set the INPUT SELECT switch on the recorder to SIMUL.
3 Start recording.

Note

Be sure to return the INPUT SELECT switch to TUNER after recording FM simulcast TV programmes. When the switch is set to SIMUL, the sound of TV programmes cannot be recorded.

What is Beta hi-fi PAL recording?

In conventional recording, audio signals are recorded on the audio track and the video signals on the video track. On Beta hi-fi recording, audio signals are recorded on the video track together with the video signals.
In this recorder's Beta hi-fi PAL system, audio signals are recorded first, using the 2 audio heads, then video signals are recorded over the audio signals with an azimuth offset, using the 2 video heads.
Beta hi-fi audio signals are frequency-modulated and recorded on 2 channels, so you can record a stereo or bilingual programme with sound clearly superior to that of a conventional audio recording.

Beta hi-fi PAL recording pattern on the video tape

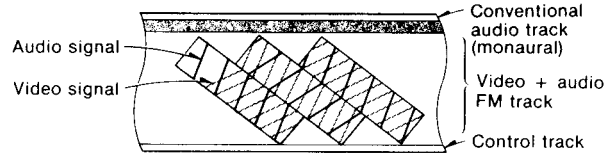

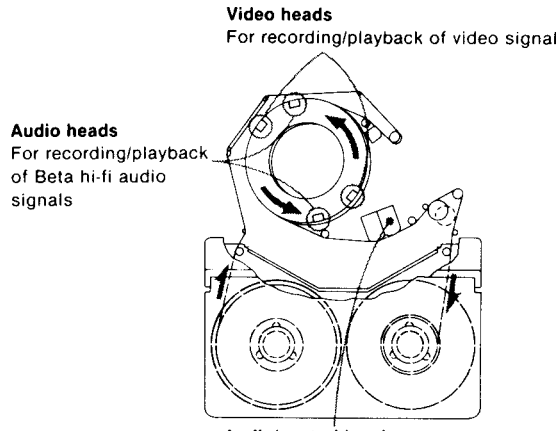

Beta hi-fi recording on SL-HF100ES

This recorder simultaneously records audio signals on the video track (Beta hi-fi recording) and on the conventional audio track (in monaural), so that tapes recorded with this recorder can be played back on an ordinary video cassette recorder without a Beta hi-fi system.
For playback, see "BETA Hi-Fi selector" on page 15.

SECTION 2
DISASSEMBLY

2-1. CASE AND FRONT PANEL REMOVAL

1) Remove the four screws (1).
2) Remove the upper case (2).
3) Remove the six screws (3) and the lower case (4).
4) Remove the control knob (5).
5) Remove the five screws (6) and the front panel (7).

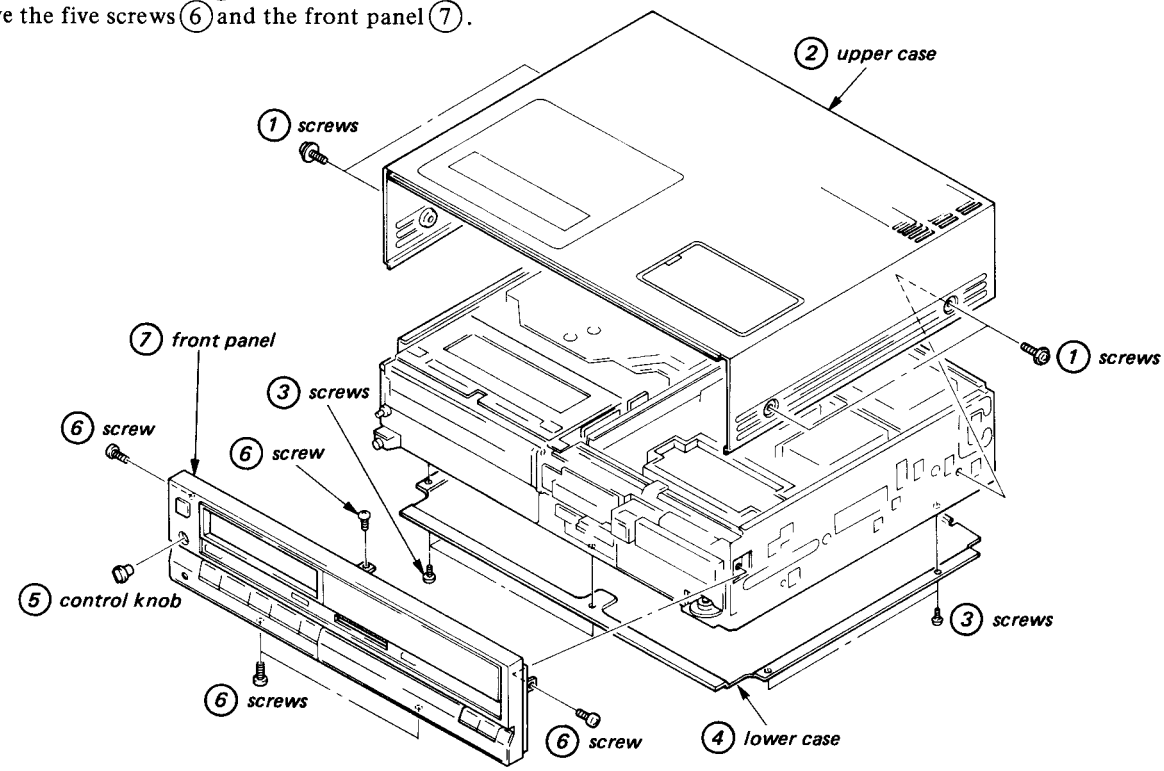

2-2. POWER BLOCK REMOVAL

1) Pull out the seven connectors (1).
2) Remove the six screws (2).
3) Remove the power block (3).

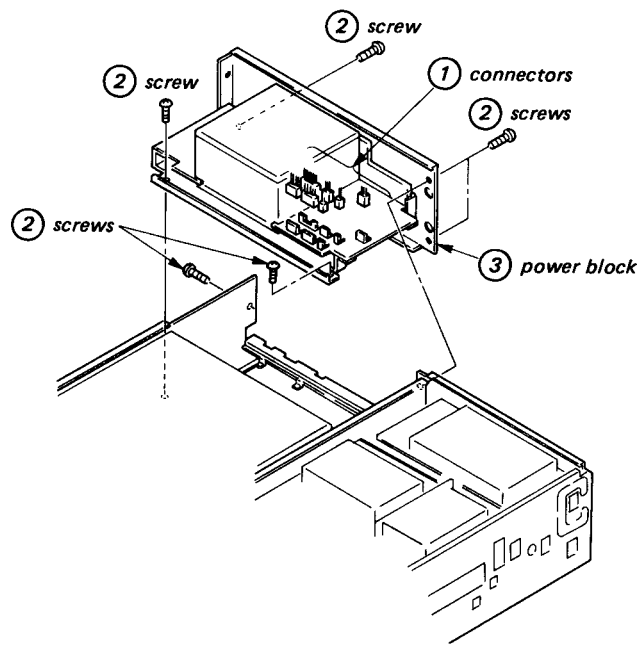

2-3. TIMER BLOCK REMOVAL

1) Pull out the three connectors (1) from the TU-60 board.
2) Pull out the three connectors (2) from the RL-18 board.
3) Pull out the connector (3) from the SS-28 board.
4) Remove the five screws (4).
5) Pull out the connector (5) from the timer block side (TM-54 board).
6) Remove the TM block (6).

TU-60 board (CN003, 101, 102)
RL-18 board (CN801, 802, 803)
SS-28 board (CN602)
TM-54 board (CN104)

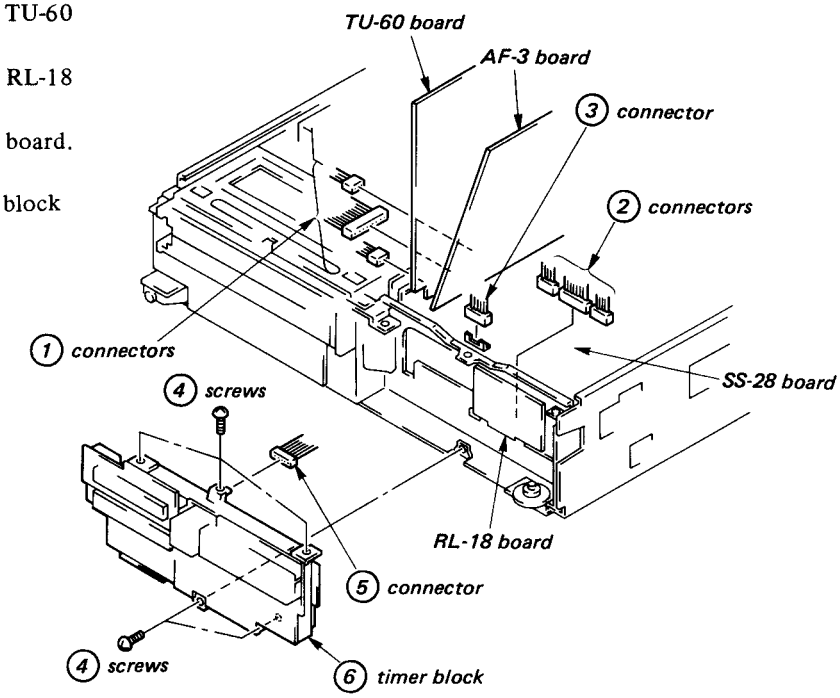

2-4. FL CASSETTE COMPARTMENT ASSEMBLY REMOVAL

1) Remove the four screws (1) and the drum cover (2).
2) Remove the internal gear flange (3).
3) Loosen the loading belt (4) exerting a force on the threading motor.
4) Remove the five mounting screws (5) of the FL cassette compartment.
5) Pull out the connector (6) from the CS-3 board.
6) Lift the FL cassette compartment assembly in the direction shown by the arrow to remove.

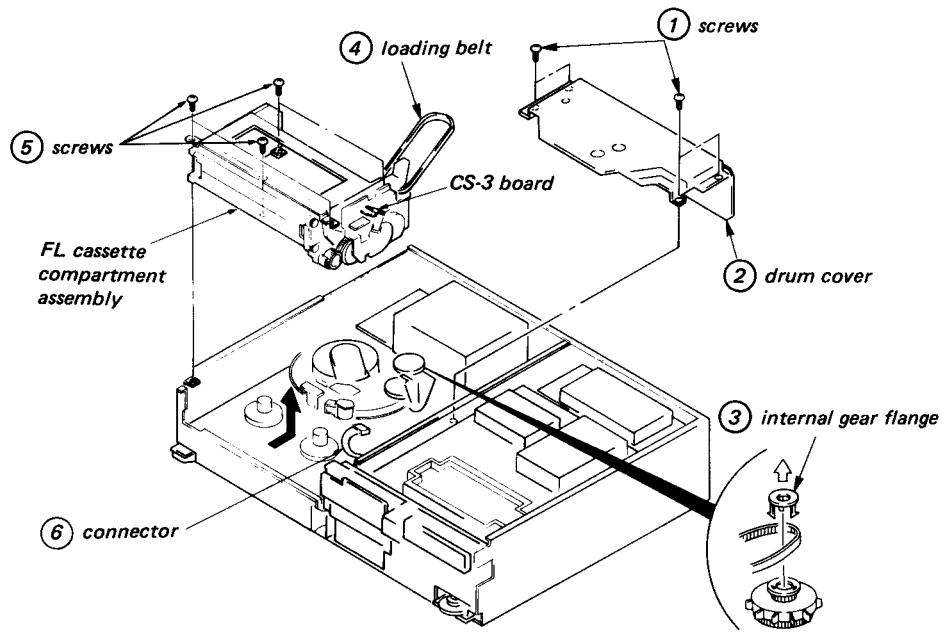

2-5. REMOVAL OF MECHANICAL CHASSIS BLOCK (1)

1) Stand the set with the right side panel on the bottom.
2) Remove the two screws (1) holding the RP-17 board.
3) Remove the RP-17 board in the direction shown by the arrow (A).
4) Remove the shield case (2).
5) Pull out the four connectors (3).

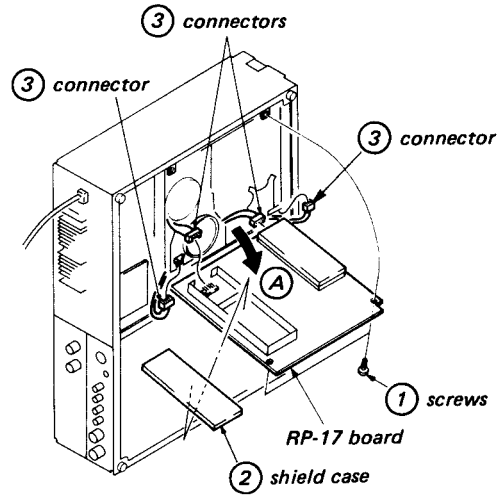

2-6. REMOVAL OF MECHANICAL CHASSIS BLOCK (2)

1) Remove the four screws (1) and the TU-60 board in the direction shown by the arrow.
2) Remove the four screws (2).
3) Remove the claw of PC board holder (3) and the AF-3 board in the direction shown by the arrow.
4) Pull out the thirteen connectors (4) from the SS-28 board and pull out the rest one from AM-5 board.
5) Pull out the connector (5) from CS-3 board.
6) Remove the six screws (6) and the mechanical chassis block.

SS-28 board (CN001, 002, 004, 301, 303, 307 603, 604, 605, 607, 608, 610, 611)
AM-5 board (CN503)
CS-3 board (CN301)

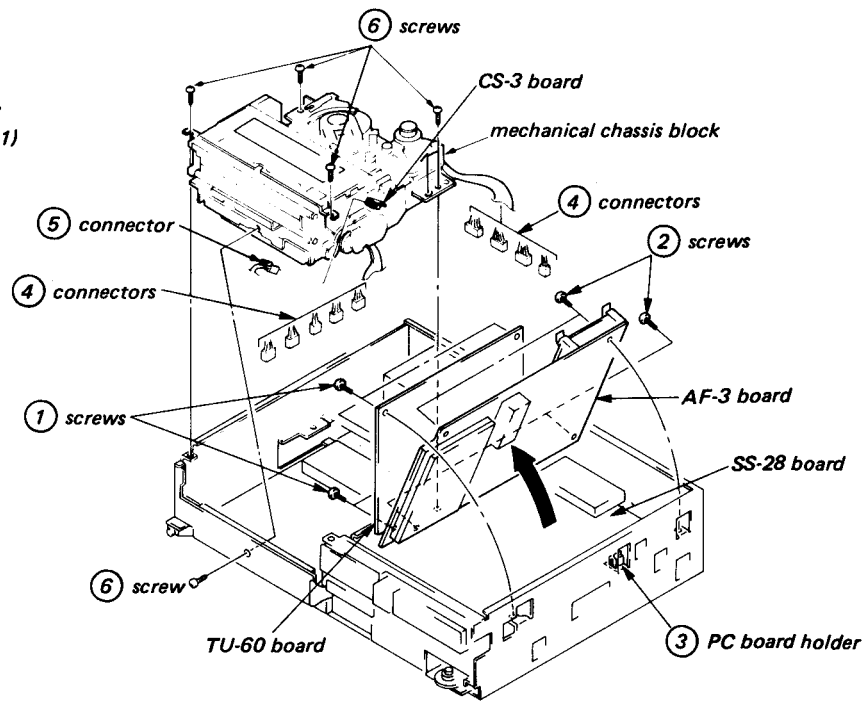

2-7. REEL ASS'Y REMOVAL

1) Place the set upside down.
2) Remove the four screws (1).
3) Remove the reel block (2).

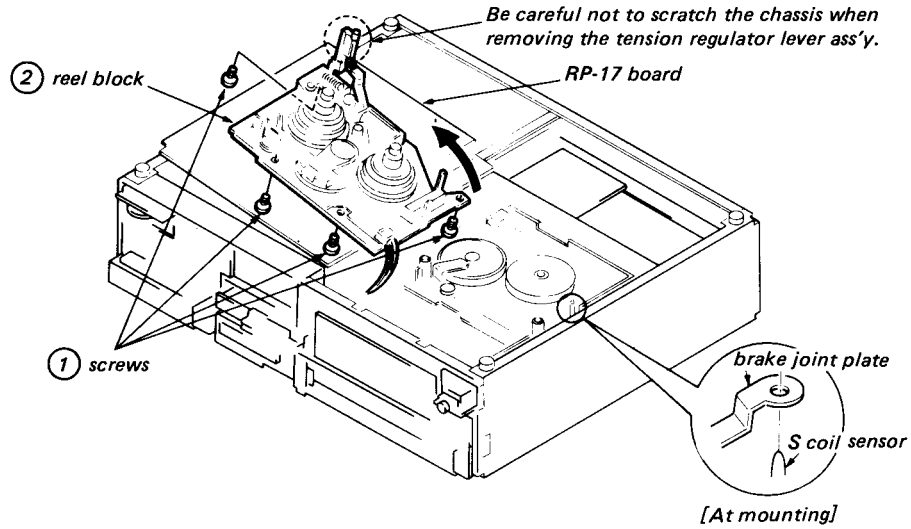

2-8. THE YC-28 BOARD REMOVAL

1) Stand the set with the left side panel on the bottom.
2) Remove the screw (1) and the connector panel (2).
3) Remove the four screws (3) holding the YC-28 board.
4) Swing open the YC-28 board in the direction shown by the arrow (A) and rest it on a cassette.

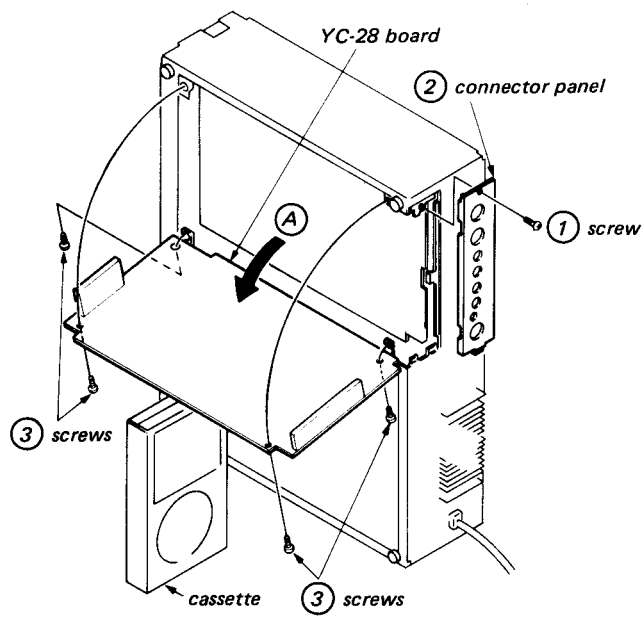

2-9. INTERNAL VIEW

— Top Side —

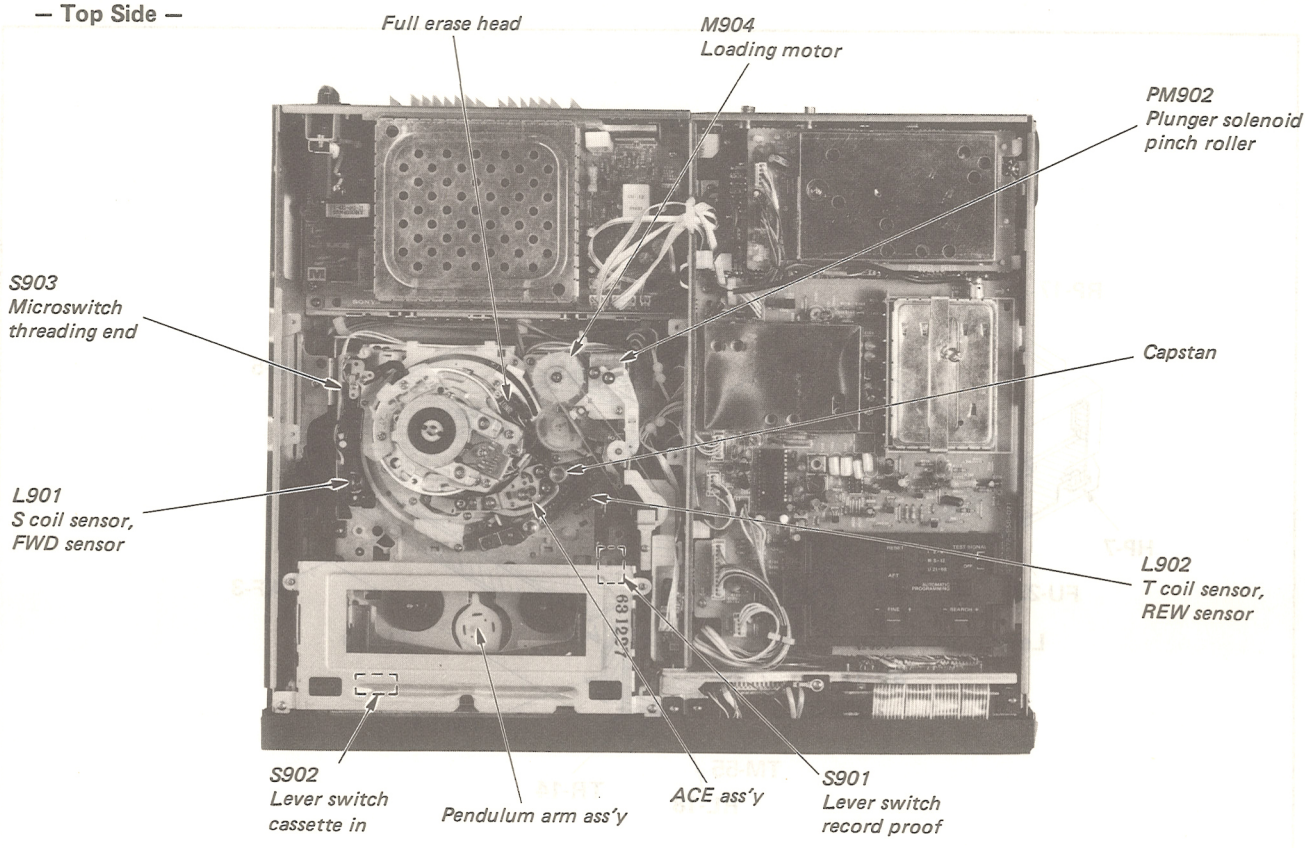

— Bottom Side —

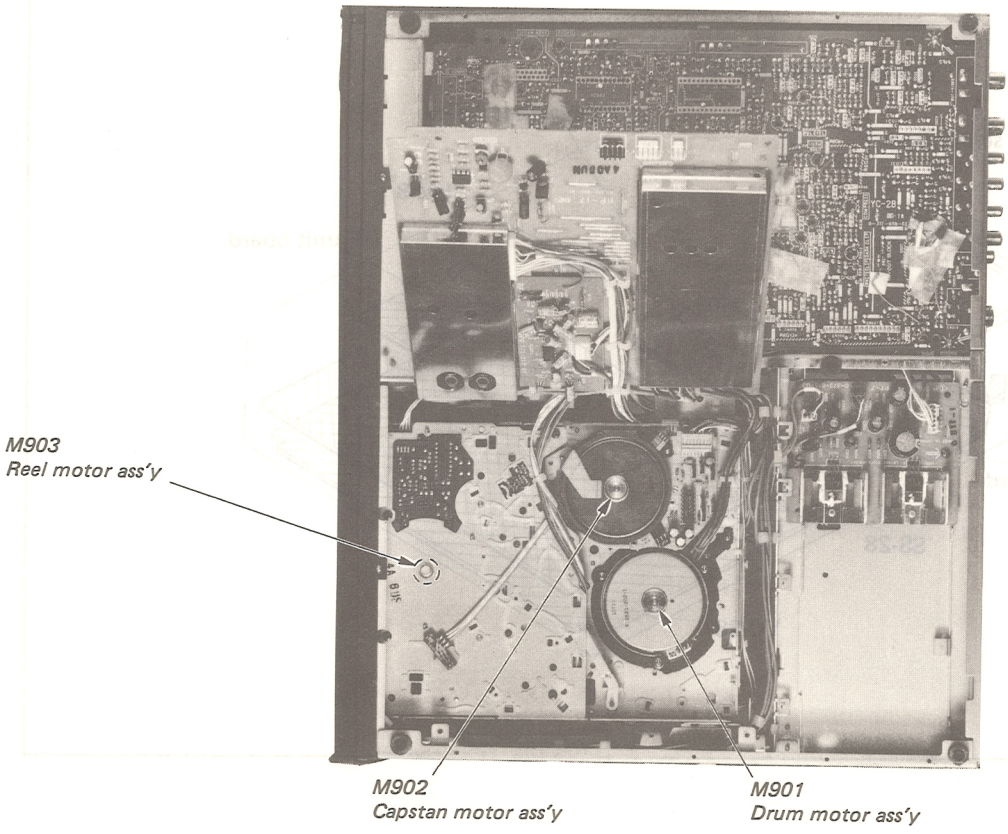

SECTION 3
DIAGRAMS

3-1. CIRCUIT BOARDS LOCATION

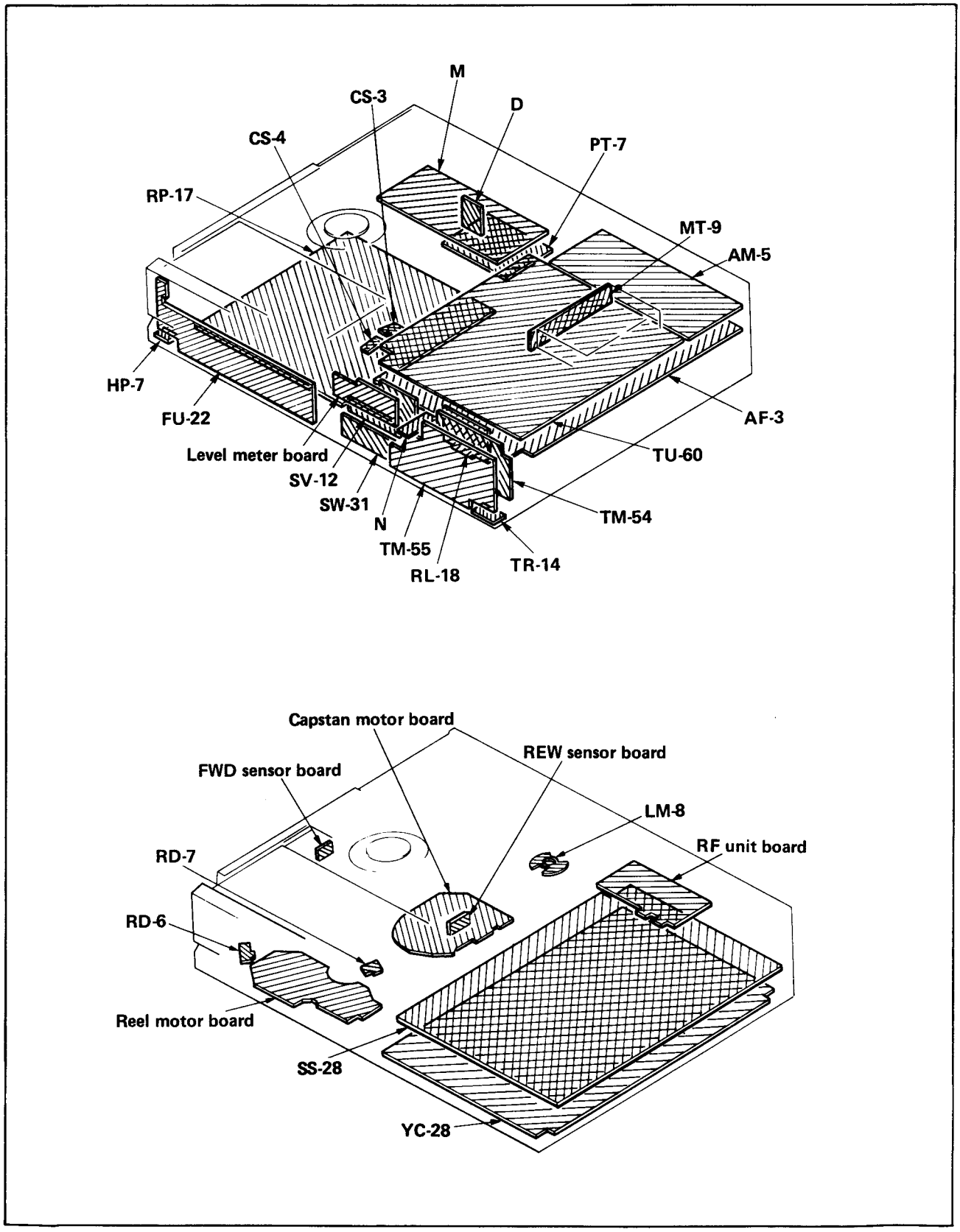

3-2. OVERALL BLOCK DIAGRAM

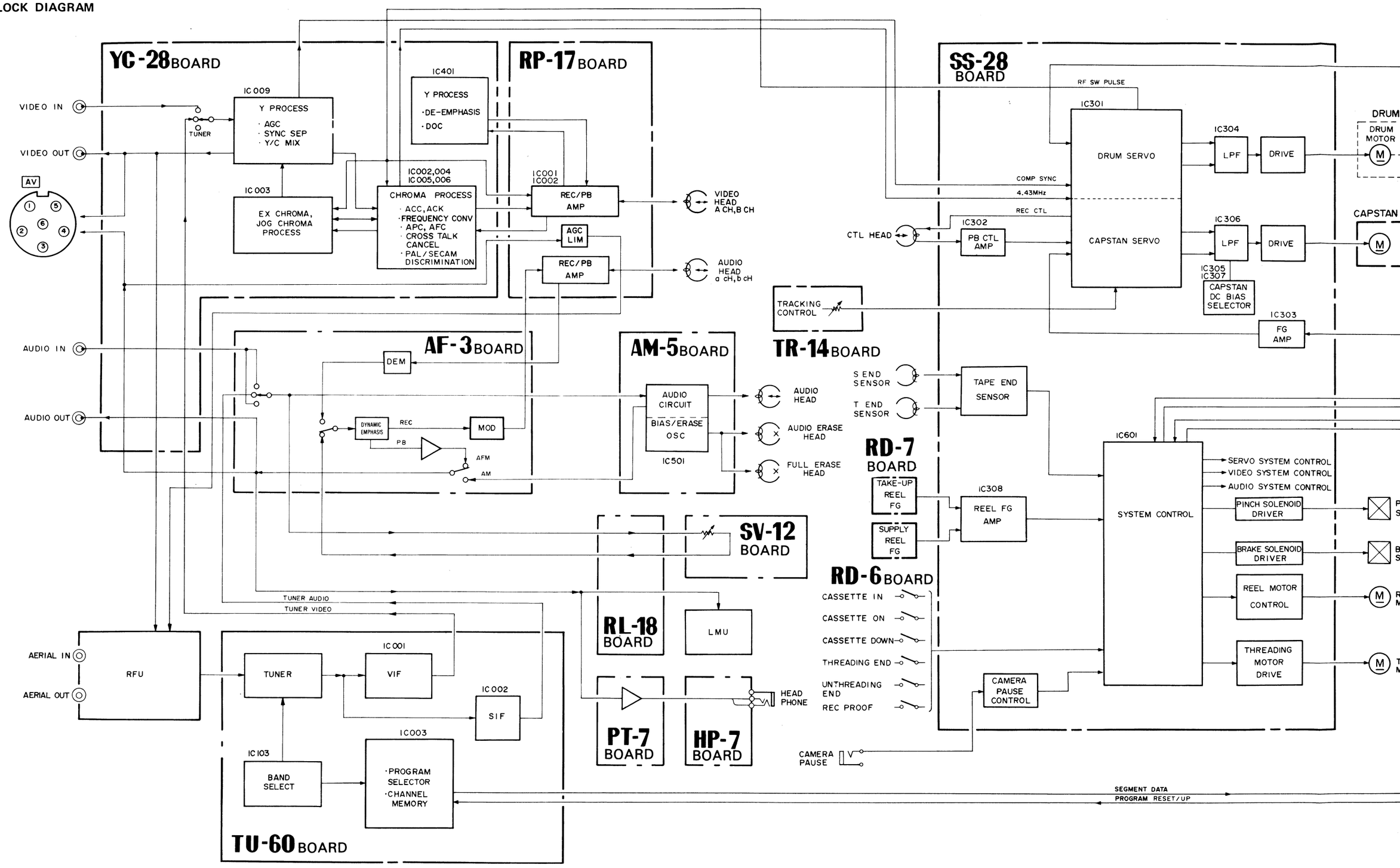

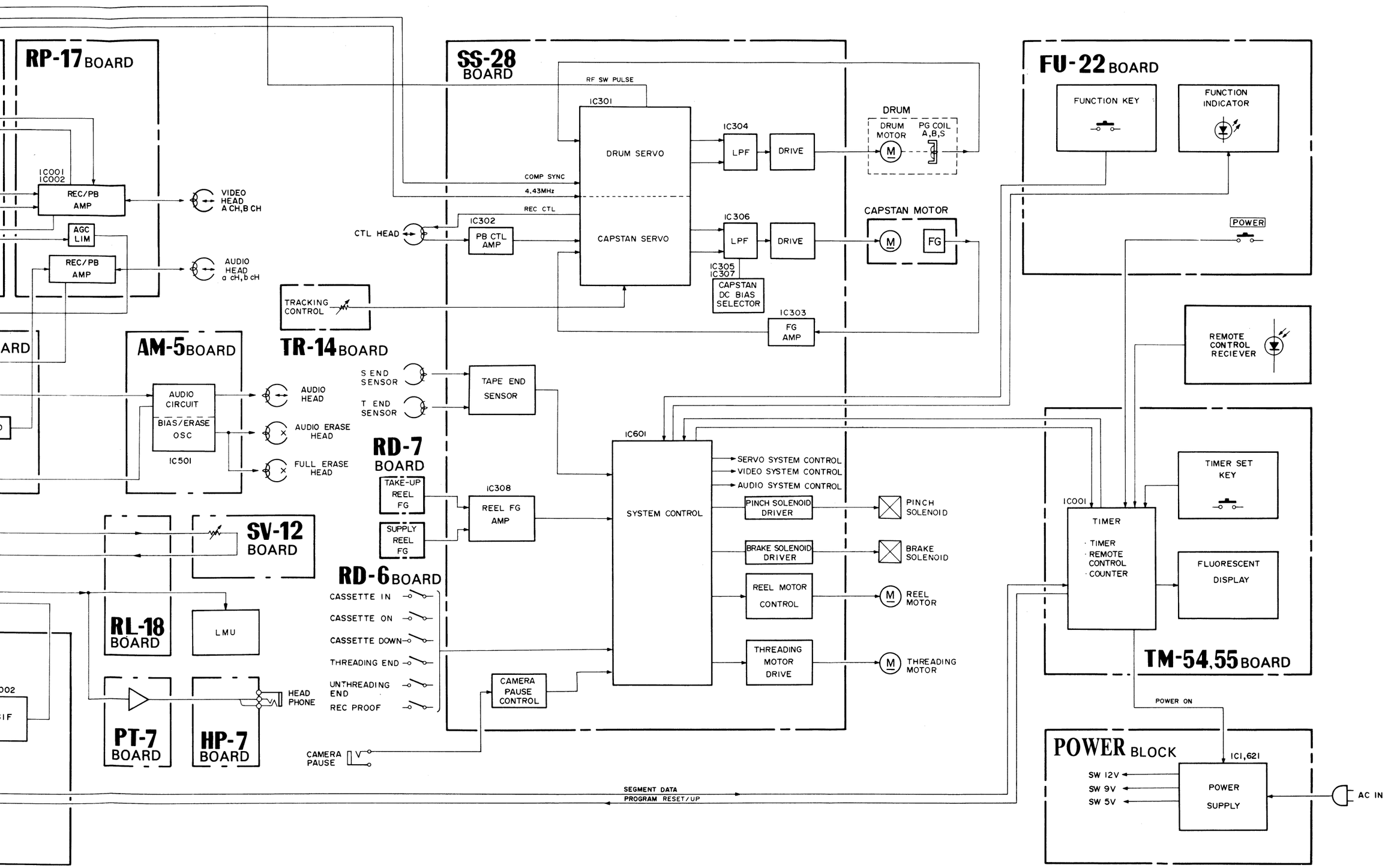
RP-17 BOARD
IC001
IC002
REC/PB AMP
AGC LIM
REC/PB AMP
VIDEO HEAD A CH,B CH
AUDIO HEAD a cH,b cH
SS-28 BOARD
RF SW PULSE
IC301
DRUM SERVO
CAPSTAN SERVO
COMP SYNC
4.43MHz
REC CTL
IC302
PB CTL AMP
CTL HEAD
IC304
LPF
DRIVE
IC306
LPF
DRIVE
IC305
IC307
CAPSTAN DC BIAS SELECTOR
DRUM
DRUM MOTOR
PG COIL A,B,S
CAPSTAN MOTOR
FG
IC303
FG AMP
TRACKING CONTROL
FU-22 BOARD
FUNCTION KEY
FUNCTION INDICATOR
POWER
REMOTE CONTROL RECIEVER
AM-5 BOARD
AUDIO CIRCUIT
BIAS/ERASE OSC
IC501
AUDIO HEAD
AUDIO ERASE HEAD
FULL ERASE HEAD
TR-14 BOARD
S END SENSOR
T END SENSOR
TAPE END SENSOR
RD-7 BOARD
TAKE-UP REEL FG
SUPPLY REEL FG
IC308
REEL FG AMP
IC601
SYSTEM CONTROL
SERVO SYSTEM CONTROL
VIDEO SYSTEM CONTROL
AUDIO SYSTEM CONTROL
PINCH SOLENOID DRIVER
PINCH SOLENOID
BRAKE SOLENOID DRIVER
BRAKE SOLENOID
REEL MOTOR CONTROL
REEL MOTOR
THREADING MOTOR DRIVE
THREADING MOTOR
SV-12 BOARD
RD-6 BOARD
CASSETTE IN
CASSETTE ON
CASSETTE DOWN
THREADING END
UNTHREADING END
REC PROOF
RL-18 BOARD
LMU
HEAD PHONE
PT-7 BOARD
HP-7 BOARD
CAMERA PAUSE CONTROL
CAMERA PAUSE
IC001
TIMER
· TIMER
· REMOTE CONTROL
· COUNTER
TIMER SET KEY
FLUORESCENT DISPLAY
TM-54,55 BOARD
POWER ON
POWER BLOCK
IC1,621
SW 12V
SW 9V
SW 5V
POWER SUPPLY
AC IN
SEGMENT DATA
PROGRAM RESET/UP

3-3. VIDEO SYSTEM BLOCK DIAGRAM

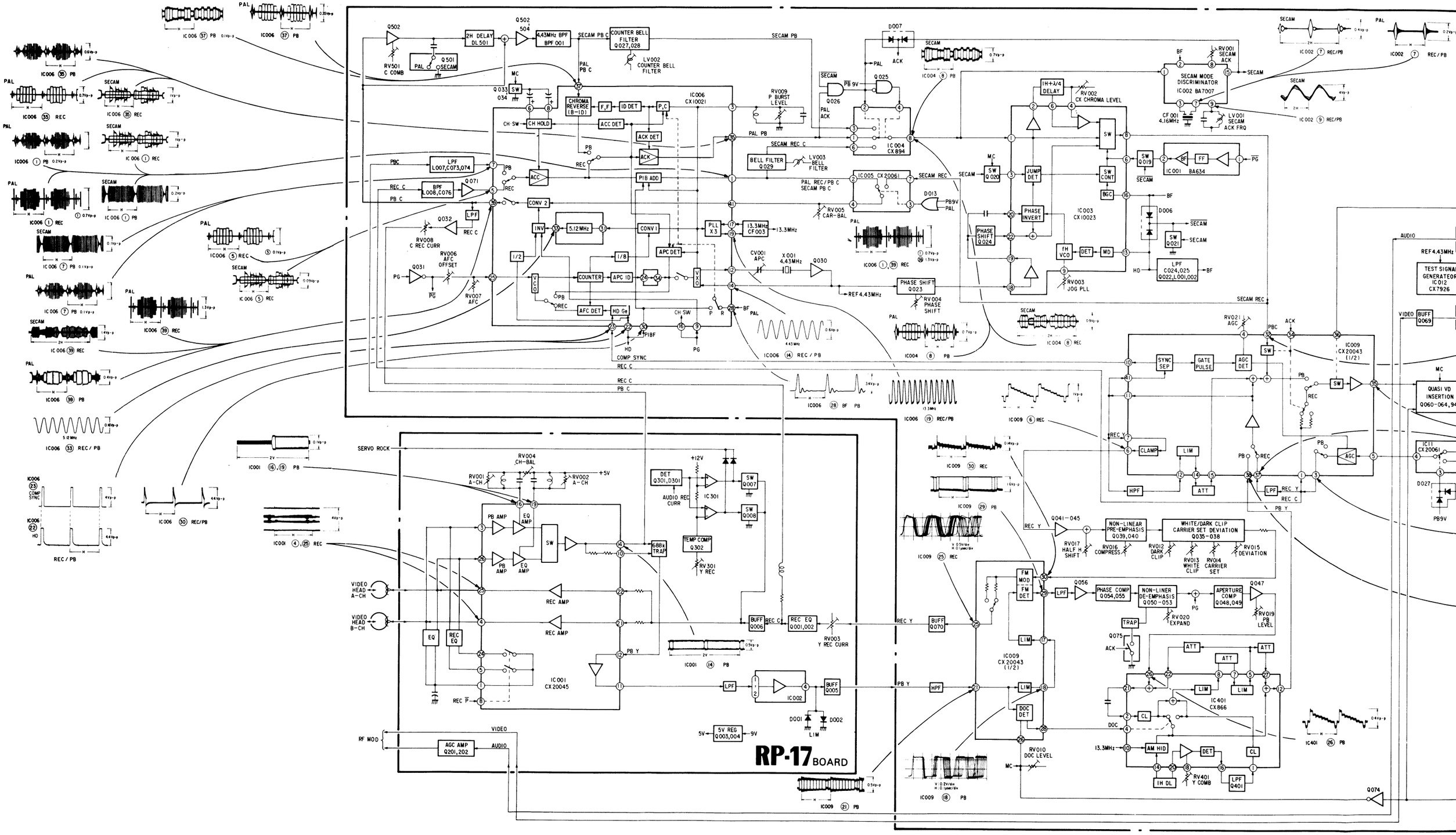
RP-17 BOARD
IC001 CX20045
IC002
IC003 CX10023
IC004 CX894
IC005 CX20061
IC006 CX10021
IC009 CX20043 (1/2)
IC401 CX866
IC001 BA634
IC002 BA7007
IC012 CX7926
IC011 CX20061
2H DELAY DL501
4.43MHz BPF BPF001
COUNTER BELL FILTER Q027,028
CHROMA REVERSE (B-I,D)
F,F
ID DET
P,C
ACC DET
ACK DET
PIB ADD
CONV 1
CONV 2
5.12MHz
APC DET
APC ID
COUNTER
AFC DET
HD Ge
VCO
1/2
1/8
LPF L007,C073,074
BPF L008,C076
PHASE SHIFT Q023
PHASE SHIFT Q024
BELL FILTER Q029
1H+1/4 DELAY
1H DL
SECAM MODE DISCRIMINATOR
JUMP DET
PHASE INVERT
1H VCO
SYNC SEP
GATE PULSE
AGC DET
CLAMP
LIM
ATT
HPF
DOC DET
AM HID
FM MOD
FM DET
PHASE COMP Q054,055
NON-LINER DE-EMPHASIS Q050-053
APERTURE COMP Q048,049
NON-LINEAR PRE-EMPHASIS Q039,040
WHITE/DARK CLIP CARRIER SET DEVIATION Q035-038
TEST SIGNAL GENERATOR
QUASI VD INSERTION Q060-064,94
CHROMA REVERSE
CH HOLD
CH SW
SW Q033
SW 034
SW Q019
SW Q020
SW Q021
SW CONT
BGC
SW Q007
SW Q008
SW Q009
SW Q010
SW Q011
SW Q012
SW Q013
SW Q014
SW Q015
SW Q016
SW Q017
SW Q018
SW Q022
SW Q026
SW Q027
SW Q028
SW Q031
SW Q032
SW Q035
SW Q036
SW Q037
SW Q038
SW Q041
SW Q042
SW Q043
SW Q044
SW Q045
SW Q046
SW Q047
SW Q051
SW Q052
SW Q053
SW Q054
SW Q055
SW Q056
SW Q057
SW Q058
SW Q059
SW Q060
SW Q061
SW Q062
SW Q063
SW Q064
SW Q065
SW Q066
SW Q067
SW Q068
SW Q069
SW Q070
SW

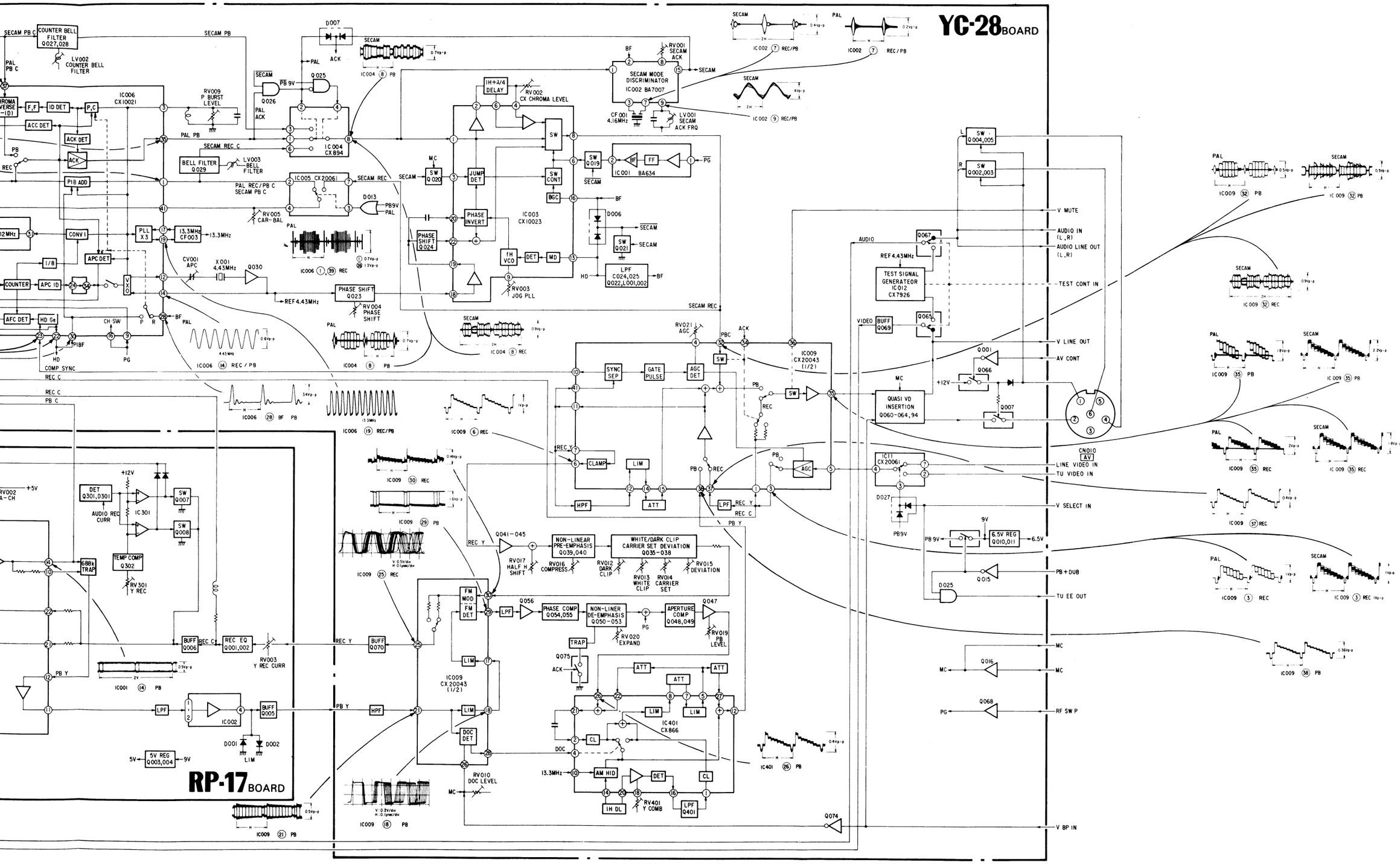
YC-28 BOARD
RP-17 BOARD
COUNTER BELL FILTER Q027,028
LV002 COUNTER BELL FILTER
IC006 CX10021
RV009 P BURST LEVEL
BELL FILTER Q029
LV003 BELL FILTER
IC005 CX20061
RV005 CAR-BAL
IC004 CX894
SECAM MODE DISCRIMINATOR IC002 BA7007
RV001 SECAM ACK
LV001 SECAM ACK FRQ
CF001 4.16MHz
IC001 BA634
IC003 CX10023
RV002 CX CHROMA LEVEL
RV003 JOG PLL
LPF C024,025 Q022,L001,002
PHASE SHIFT Q023
RV004 PHASE SHIFT
PHASE SHIFT Q024
CV001 APC
X001 4.43MHz
13.3MHz CF003
PLL X3
CONV1
APC DET
COUNTER
APC ID
AFC DET
HD Ge
COMP SYNC
REC C
PB C
IC006 (14) REC / PB
IC006 (28) BF PB
IC006 (19) REC/PB
IC004 (8) PB
IC004 (8) REC
IC009 (6) REC
IC009 (30) REC
IC009 (29) PB
IC009 (25) REC
IC009 (18) PB
IC009 (21) PB
IC001 (14) PB
IC002 (7) REC/PB
IC002 (9) REC/PB
IC002 (7) REC/PB
IC009 (32) PB
IC009 (32) REC
IC009 (35) PB
IC009 (35) REC
IC009 (37) REC
IC009 (3) REC
IC009 (3) REC
IC009 (38) PB
IC401 (26) PB
IC401 CX866
RV401 Y COMB
LPF Q401
RV010 DOC LEVEL
IC009 CX20043 (1/2)
IC009 CX20043 (1/2)
SYNC SEP
GATE PULSE
AGC DET
CLAMP
LIM
HPF
ATT
LPF
AGC
RV021 AGC
Q041-045
NON-LINEAR PRE-EMPHASIS Q039,040
WHITE/DARK CLIP CARRIER SET DEVIATION Q035-038
RV017 HALF H SHIFT
RV016 COMPRESS
RV012 DARK CLIP
RV013 WHITE CLIP
RV014 CARRIER SET
RV015 DEVIATION
FM MOD
FM DET
Q056
PHASE COMP Q054,055
NON-LINER DE-EMPHASIS Q050-053
RV020 EXPAND
APERTURE COMP Q048,049
Q047
RV019 PB LEVEL
TRAP
Q075
ACK
DOC DET
CL
AM HID
DET
IH DL
IC11 CX20061
D027
PB9V
6.5V REG Q010,011
Q015
D025
Q016
Q068
Q074
SW Q004,005
SW Q002,003
V MUTE
AUDIO IN (L,R)
AUDIO LINE OUT (L,R)
TEST CONT IN
TEST SIGNAL GENERATEOR IC012 CX7926
REF 4.43MHz
BUFF Q069
Q065
Q067
V LINE OUT
AV CONT
Q001
Q066
Q007
QUASI VD INSERTION Q060-064,94
CN010 AV
LINE VIDEO IN
TU VIDEO IN
V SELECT IN
PB + DUB
TU EE OUT
MC
RF SW P
V BP IN
DET Q301,D301
AUDIO REC CURR
IC301
SW Q007
SW Q008
TEMP COMP Q302
RV301 Y REC
688k TRAP
BUFF Q006
REC EQ Q001,002
RV003 Y REC CURR
BUFF Q070
BUFF Q005
IC002
D001
D002
5V REG Q003,004
LIM
+12V
+5V
9V
6.5V
PB 9V
PB Y
REC Y
REC C
PB C
SECAM REC
SECAM PB
PAL PB
PAL REC/PB C SECAM PB C
SECAM REC C
PAL ACK
SECAM
PAL
PG
BF
HD
PBC
PB
REC
MC
PG

3-4. VIDEO Y BLOCK DIAGRAM

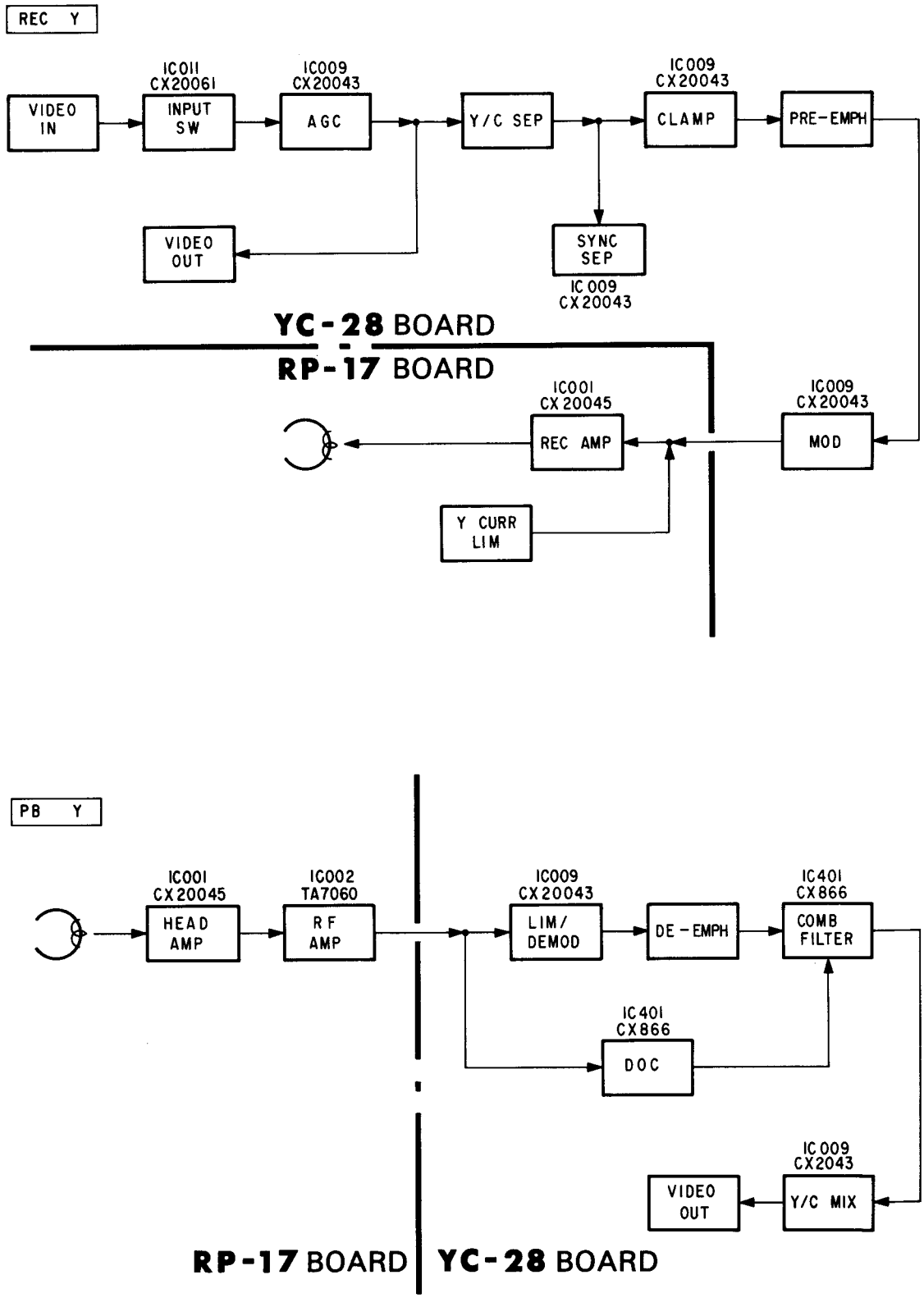

3-5. VIDEO CHROMA BLOCK DIAGRAM

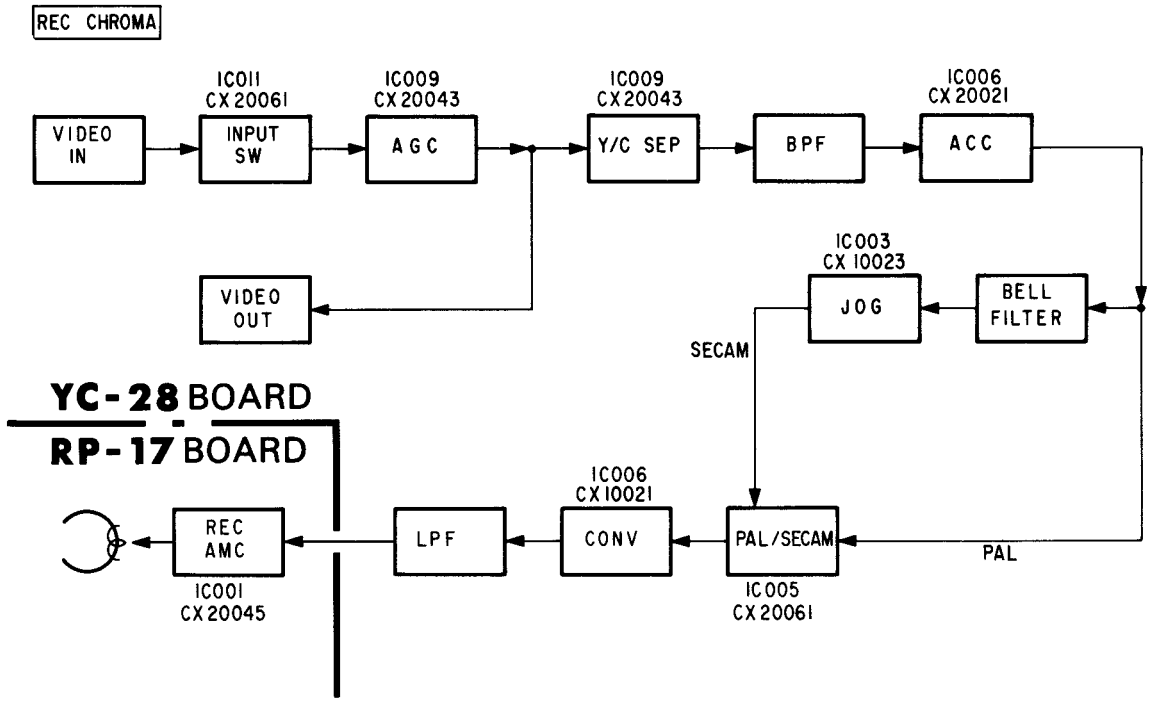

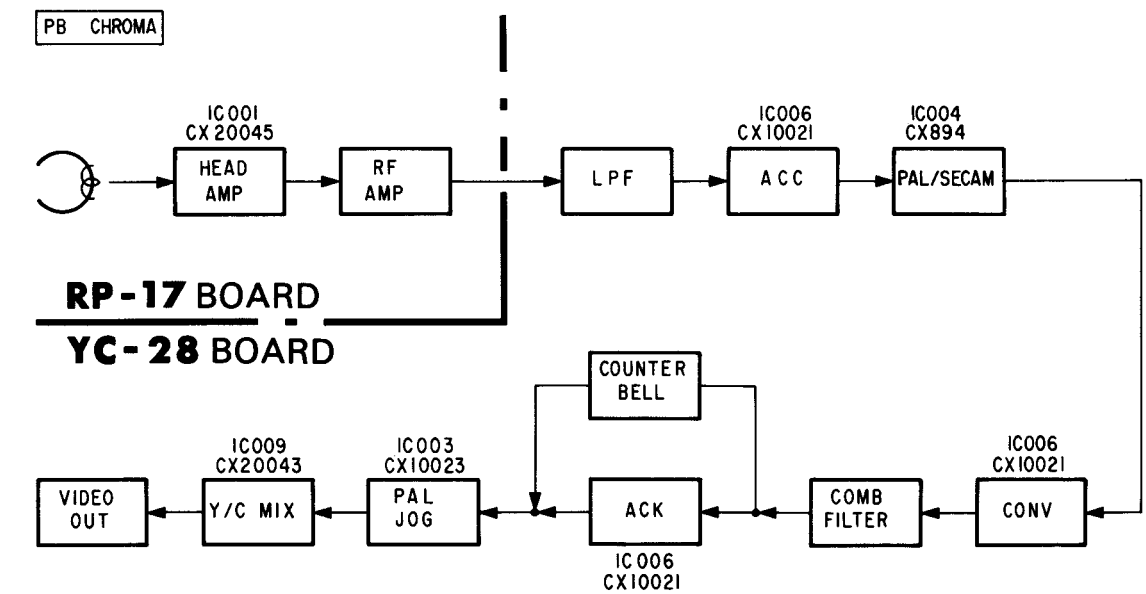

3-6. SERVO SYSTEM BLOCK DIAGRAM

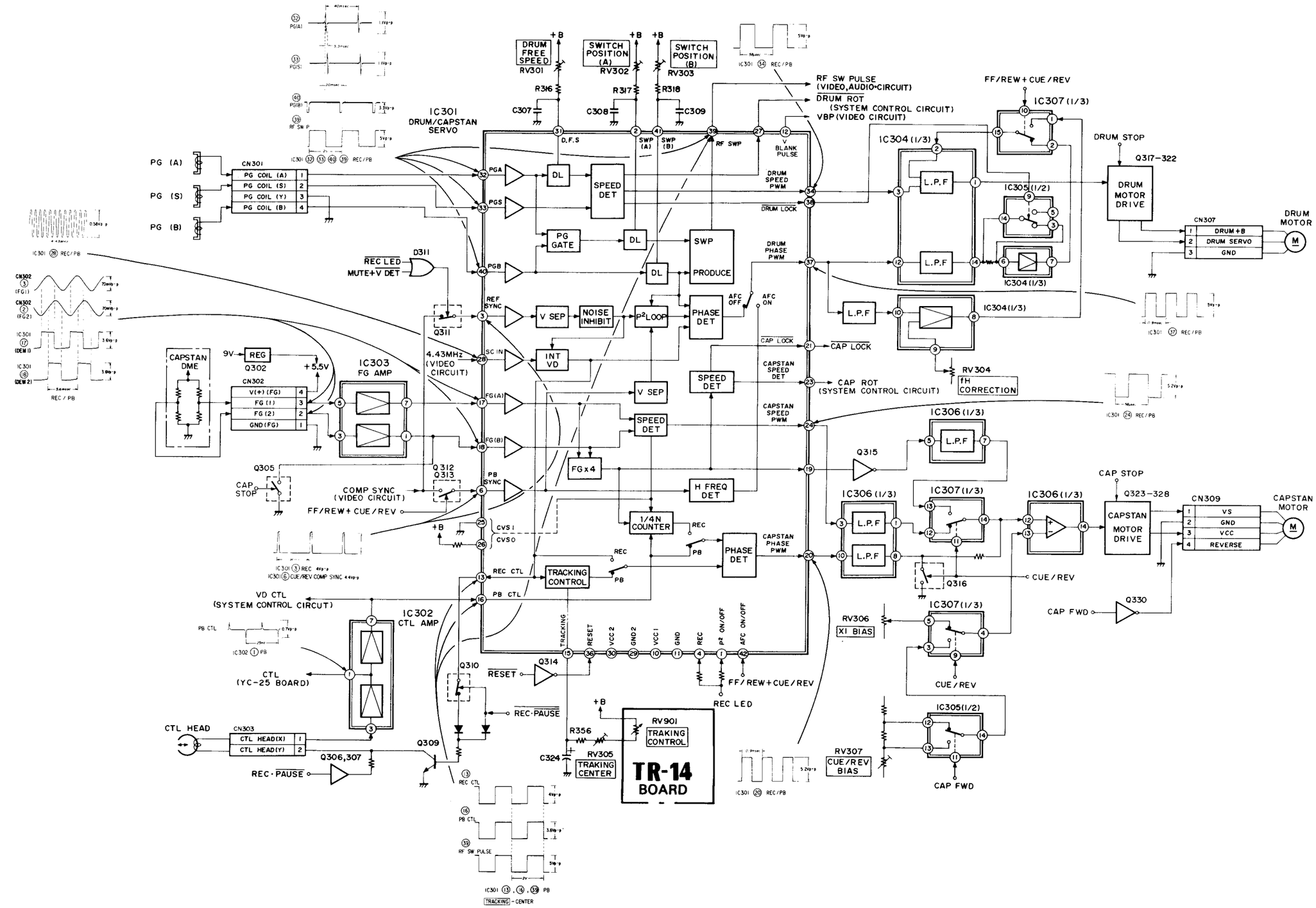

3-7. SYSTEM CONTROL BLOCK DIAGRAM

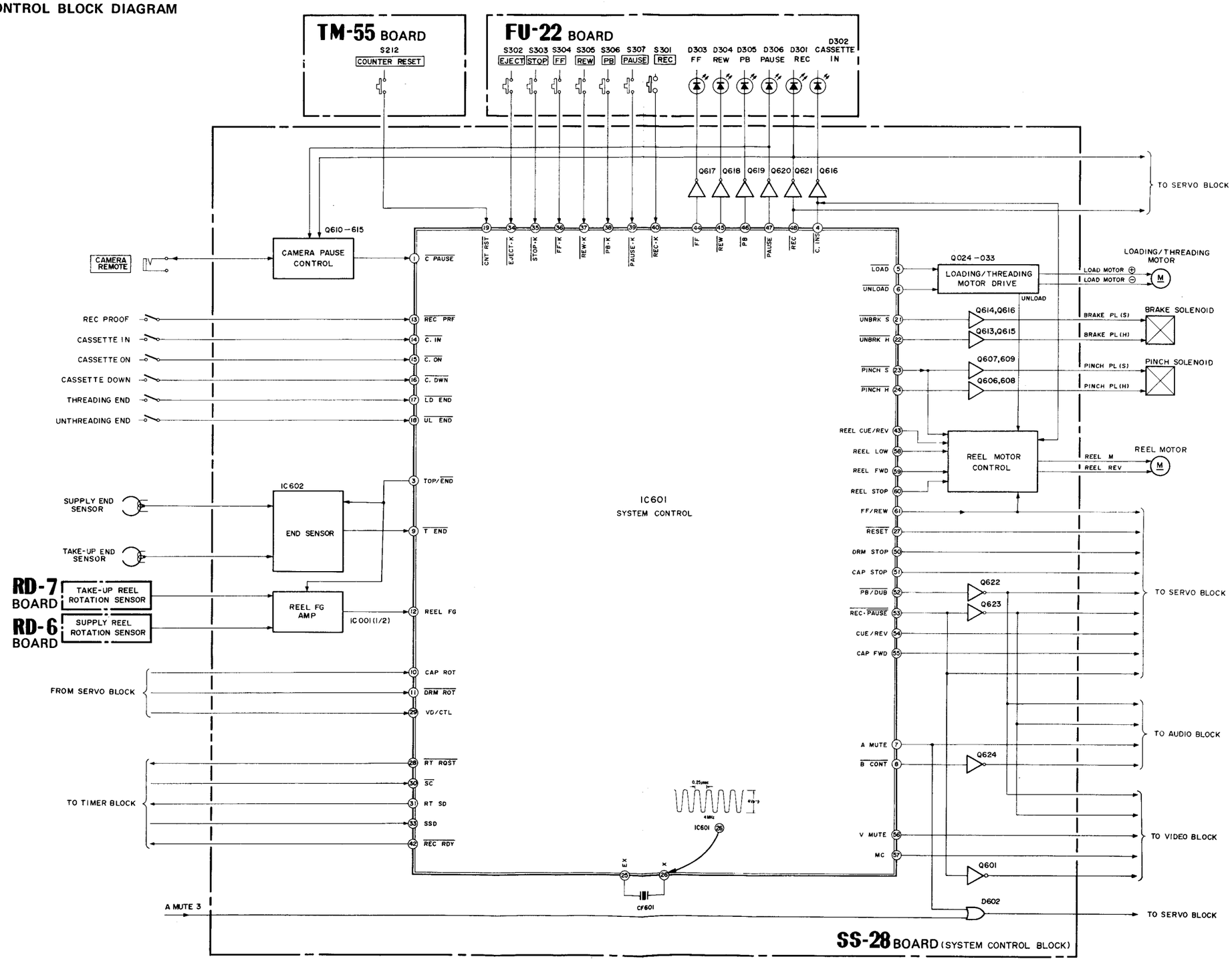

3-8. SYSTEM CONTROL CIRCUIT AND MECHANISM BLOCK INTERFACE

SIGNAL \ MODE	I/O	Pin No.	EJECTED	LOADING	THREADING	STOP	UN-THREADING	UN-LOADING	FF	REW	PB	PB·PAUSE	PICTURE SEARCH CUE	PICTURE SEARCH REV	REC	REC·PAUSE	TIMER REC	FR SEARCH CUE	FR SEARCH REV
REC PROOF	I	IC601 13pin	H	H	H/L	H/L	H/L	H	H/L	H/L	H/L	H/L	H/L	H/L	L	L	L	H/L	H/L
C·IN	I	IC601 14pin	H	L	L	L	L	L	L	L	L	L	L	L	L	L	L	L	L
C·ON	I	IC601 15pin	H	L	L	L	L	L	L	L	L	L	L	L	L	L	L	L	L
C·DWN	I	IC601 16pin	H	H	L	L	L	H	L	L	L	L	L	L	L	L	L	L	L
LD END	I	IC601 17pin	H	H	H	L	H	H	L	L	L	L	L	L	L	L	L	L	L
UL END	I	IC601 18pin	L	L	H	H	H	L	H	H	H	H	H	H	H	H	H	H	H
UNBRK S	O	IC601 21pin	H	H	H	H	H	H	H	H	H	H	H	H	H	H	H	H	H
UNBRK H	O	IC601 22pin	H	H	L	H	L	H	L	L	L	H	L	L	L	H	L	L	L
PINCH S	O	IC601 23pin	H	H	H	H	H	H	H	H	H	H	H	H	H	H	H	H	H
PINCH H	O	IC601 24pin	H	L	H	H	H	L	H	H	L	H	L	L	L	H	L	H	H
LOAD	O	IC601 5pin	H	L	L	H	H	H	H	H	H	H	H	H	H	H	H	H	H
UNLOAD	O	IC601 6pin	H	H	H	H	L	L	H	H	H	H	H	H	H	H	H	H	H

3-9. SYSTEM CONTROL CIRCUIT AND REMOTE CONTROL/TIMER CIRCUIT INTERFACE

SIGNAL \ MODE	I/O	Pin No.	STOP	FF	REW	PB	PB·PAUSE	PICTURE SEARCH CUE	PICTURE SEARCH REV	REC	REC·PAUSE	TIMER REC	FR SEARCH CUE	FR SEARCH REV
RT RQST	I	IC601 28pin												
RTSD	I	IC601 31pin												
COUNTER RESET	I	IC601 19pin												
SSD	O	IC601 33pin												
SC	O	IC601 30pin												
REC READY	O	IC601 42pin	H/L	H	H	H	H	H	H	H	H	L	H	H

3-10. SYSTEM CONTROL CIRCUIT AN

SIGNAL \ MODE	I/O	Pin No.
EJECT·K	I	IC601 34pin
STOP·K	I	IC601 35pin
FF·K	I	IC601 36pin
REW·K	I	IC601 37pin
PB·K	I	IC601 38pin
PAUSE·K	I	IC601 39pin
REC·K	I	IC601 40pin
FF	O	IC601 44pin
REW	O	IC601 45pin
PB	O	IC601 46pin
PAUSE	O	IC601 47pin
REC	O	IC601 48pin
C·INSIDE	O	IC601 4pin

3-11. SYSTEM CONTROL CIRCUIT AN

SIGNAL \ MODE	I/O	Pin No.
TEND*1	I	IC601 9pin
C·PAUSE*2	I	IC601 1pin
TOP/END	O	IC601 3pin

*1 "L" at tape end.

*2 Camera pause signal.

LOADING	FF	REW	PB	PB· PAUSE	PICTURE SEARCH		REC	REC· PAUSE	TIMER REC	FR SEARCH	
					CUE	REV				CUE	REV
H	H/L	H/L	H/L	H/L	H/L	H/L	L	L	L	H/L	H/L
L	L	L	L	L	L	L	L	L	L	L	L
L	L	L	L	L	L	L	L	L	L	L	L
H	L	L	L	L	L	L	L	L	L	L	L
H	L	L	L	L	L	L	L	L	L	L	L
L	H	H	H	H	H	H	H	H	H	H	H
H	H	H	H	H	H	H	H	H	H	H	H
H	L	L	L	H	L	L	L	H	L	L	L
H	H	H	H	H	H	H	H	H	H	H	H
L	H	H	L	H	L	L	L	H	L	H	H
H	H	H	H	H	H	H	H	H	H	H	H
L	H	H	H	H	H	H	H	H	H	H	H

NTERFACE

PICTURE SEARCH		REC	REC· PAUSE	TIMER REC	FR SEARCH	
CUE	REV				CUE	REV
H	H	H	H	L	H	H

3-10. SYSTEM CONTROL CIRCUIT AND FUNCTION BLOCK INTERFACE

SIGNAL	MODE I/O	Pin No.	STOP	FF	REW	PB	PB· PAUSE	PICTURE SEARCH		REC	REC· PAUSE	TIMER REC	FR SEARCH	
								CUE	REV				CUE	REV
$\overline{\text{EJECT·K}}$	I	IC601 34pin	H	H	H	H	H	H	H	H	H	H	H	H
$\overline{\text{STOP·K}}$	I	IC601 35pin	H	H	H	H	H	H	H	H	H	H	H	H
$\overline{\text{FF·K}}$	I	IC601 36pin	H	H	H	H	H	L	H	H	H	H	L	H
$\overline{\text{REW·K}}$	I	IC601 37pin	H	H	H	H	H	H	L	H	H	H	H	L
$\overline{\text{PB·K}}$	I	IC601 38pin	H	H	H	H	H	H	H	H	H	H	H	H
$\overline{\text{PAUSE·K}}$	I	IC601 39pin	H	H	H	H	H	H	H	H	H	H	H	H
$\overline{\text{REC·K}}$	I	IC601 40pin	H	H	H	H	H	H	H	H	H	H	H	H
$\overline{\text{FF}}$	O	IC601 44pin	H	L	H	H	H	L	H	H	H	H	L	H
$\overline{\text{REW}}$	O	IC601 45pin	H	H	L	H	H	H	L	H	H	H	H	L
$\overline{\text{PB}}$	O	IC601 46pin	H	H	H	L	L	L	L	H	H	H	L	L
$\overline{\text{PAUSE}}$	O	IC601 47pin	H	H	H	H	L	H	H	H	L	H	H	H
$\overline{\text{REC}}$	O	IC601 48pin	H	H	H	H	H	H	H	L	L	L	H	H
$\overline{\text{C·INSIDE}}$	O	IC601 4pin	L	L	L	L	L	L	L	L	L	L	L	L

3-11. SYSTEM CONTROL CIRCUIT AND ITS PERIPHERAL CIRCUIT INTERFACE

SIGNAL	MODE I/O	Pin No.	STOP	FF	REW	PB	PB· PAUSE	PICTURE SEARCH		REC	REC· PAUSE	TIMER REC	FR SEARCH	
								CUE	REV				CUE	REV
TEND*1	I	IC601 9pin	H	H	H	H	H	H	H	H	H	H	H	H
C·PAUSE*2	I	IC601 1pin	H	H	H	H	H	H	H	H	H	H	H	H
TOP/END	O	IC601 3pin	L	L	H	L	L	L	H	L	L	L	L	H

*1 "L" at tape end.

*2 Camera pause signal.

3-12. SYSTEM CONTROL CIRCUIT AND REEL MOTOR CONTROL CIRCUIT INTERFACE

SIGNAL \ MODE	I/O	Pin No.	EJECTED	LOADING	THREADING	STOP	UN-THREADING	UN-LOADING	FF	REW	PB	PB·PAUSE	PICTURE SEARCH CUE	PICTURE SEARCH REV	REC	REC·PAUSE	TIMER REC	FR SEARCH CUE	FR SEARCH REV
REEL FG	I	IC601 12pin																	
REEL LOW	O	IC601 58pin	L	L	H	L	H	L	L	L	H	H	L	L	H	H	H	H	H
REEL FWD	O	IC601 59pin	H	H	H	H	L	H	H	L	H	H	H	L	H	H	H	H	L
REEL STOP	O	IC601 60pin	H	H	L	H	L	H	L	L	L	H	L	L	L	H	L	L	L
FF/REW	O	IC601 61pin	L	L	L	L	L	L	H	H	L	L	L	L	L	L	L	H	H
REEL CUE/REV	O	IC601 43pin	L	L	L	L	L	L	L	L	L	L	H	H	L	L	L	L	L
$\overline{\text{PINCH S}}$	O	IC601 23pin	H	H	H	H	H	H	H	H	H	H	H	H	H	H	H	H	H
TOP/$\overline{\text{END}}$	O	IC601 3pin	L	L	L	L	L	L	L	H	L	L	L	H	L	L	L	L	H
$\overline{\text{UNLOAD}}$	O	IC601 6pin	H	H	H	H	L	L	H	H	H	H	H	H	H	H	H	H	H
$\overline{\text{C·INSIDE}}$	O	IC601 4pin	H	H	H	L	H	H	L	L	L	L	L	L	L	L	L	L	L

3-13. SYSTEM CONTROL CIRCUIT AND VIDEO CIRCUIT INTERFACE

SIGNAL \ MODE	I/O	Pin No.	STOP (E-E)	FF	REW	PB	PB·PAUSE	PICTURE SEARCH CUE	PICTURE SEARCH REV	REC	REC·PAUSE	TIMER REC	FR SEARCH CUE	FR SEARCH REV
V MUTE	O	IC601 56pin	L	L	L	L	L	L	L	L	L	L	L	L
MC	O	IC601 57pin	L	L	L	L	H	H	H	L	L	L	H	H
V REC·$\overline{\text{PAUSE}}$	O	CN601 3pin	L	L	L	L	L	L	L	H*1	L	H*1	L	L
$\overline{\text{PB + DUB}}$	O	IC601 52pin	H	H	H	L	L	L	L	H	H	H	L	L

*1 RECORD mode selector switch: VIDEO

3-14. SYSTEM CONTROL CIRCUIT AND SE

SIGNAL \ MODE	I/O	Pin No.	STOP
$\overline{\text{DRUM ROT}}$	I	IC601 11pin	H
CAP ROT	I	IC601 10pin	L
VD/CTL	I	IC601 29pin	
DRUM STOP	O	IC601 50pin	H
CAP STOP	O	IC601 51pin	H
$\overline{\text{REC·PAUSE}}$	O	IC601 53pin	H
CUE/REV	O	IC601 54pin	L
CAP FWD	O	IC601 55pin	H
$\overline{\text{194 RESET}}$*1	O	IC601 27pin	H
$\overline{\text{REC}}$ ($\overline{\text{REC LED}}$)	O	IC601 48pin	H
FF/REW	O	IC601 61pin	L

*1 Reset signal for CX194.

3-15. SYSTEM CONTROL CIRCUIT AND AU

SIGNAL \ MODE	I/O	Pin No.	STOP (E-E)
A MUTE 2	O	IC601 7pin	L
B CONT	O	IC601 8pin	H
$\overline{\text{REC·PAUSE}}$	O	IC601 53pin	H
$\overline{\text{PB + DUB}}$	O	IC601 52pin	H

E

FF	REW	PB	PB·PAUSE	PICTURE SEARCH		REC	REC·PAUSE	TIMER REC	FR SEARCH	
				CUE	REV				CUE	REV
L	L	H	H	L	L	H	H	H	H	H
H	L	H	H	H	L	H	H	H	H	L
L	L	L	H	L	L	L	H	L	L	L
H	H	L	L	L	L	L	L	L	H	H
L	L	L	L	H	H	L	L	L	L	L
H	H	H	H	H	H	H	H	H	H	H
L	H	L	L	L	H	L	L	L	L	H
H	H	H	H	H	H	H	H	H	H	H
L	L	L	L	L	L	L	L	L	L	L

RE H REV	REC	REC·PAUSE	TIMER REC	FR SEARCH	
				CUE	REV
L	L	L	L	L	L
H	L	L	L	H	H
L	H*1	L	H*1	L	L
L	H	H	H	L	L

3-14. SYSTEM CONTROL CIRCUIT AND SERVO CIRCUIT INTERFACE

SIGNAL / MODE	I/O	Pin No.	STOP	FF	REW	PB	PB·PAUSE	PICTURE SEARCH		REC	REC·PAUSE	TIMER REC	FR SEARCH	
								CUE	REV				CUE	REV
$\overline{\text{DRUM ROT}}$	I	IC601 11pin	H	L	L	L	L	L	L	L	L	L	L	L
CAP ROT	I	IC601 10pin	L	L	L	H	H	H	H	H	H	H	L	L
VD/CTL	I	IC601 29pin		CTL	CTL	CTL		CTL	CTL	VD		VD	CTL	CTL
DRUM STOP	O	IC601 50pin	H	L	L	L	L	L	L	L	L	L	L	L
CAP STOP	O	IC601 51pin	H	H	H	L	L	L	L	L	L	L	H	H
$\overline{\text{REC·PAUSE}}$	O	IC601 53pin	H	H	H	H	H	H	H	L	H	L	H	H
CUE/REV	O	IC601 54pin	L	L	L	L	L	H	H	L	L	L	L	L
CAP FWD	O	IC601 55pin	H	H	H	H	H	H	L	H	H	H	H	H
$\overline{\text{194 RESET}}$*1	O	IC601 27pin	H	H	H	H	H	H	H	H	H	H	H	H
$\overline{\text{REC}}$ ($\overline{\text{REC LED}}$)	O	IC601 48pin	H	H	H	H	H	H	H	L	L	L	H	H
FF/REW	O	IC601 61pin	L	H	H	L	L	L	L	L	L	L	H	H

*1 Reset signal for CX194.

3-15. SYSTEM CONTROL CIRCUIT AND AUDIO CIRCUIT INTERFACE

SIGNAL / MODE	I/O	Pin No.	STOP (E-E)	FF	REW	PB	PB·PAUSE	PICTURE SEARCH		REC	REC·PAUSE	TIMER REC	FR SEARCH	
								CUE	REV				CUE	REV
A MUTE 2	O	IC601 7pin	L	L	L	L	H	H	H	L	L	L	H	H
B CONT	O	IC601 8pin	H	H	H	H	H	H	H	L	H	L	H	H
$\overline{\text{REC·PAUSE}}$	O	IC601 53pin	H	H	H	H	H	H	H	L	H	L	H	H
$\overline{\text{PB + DUB}}$	O	IC601 52pin	H	H	H	L	L	L	L	H	H	H	L	L

3-16. CAPSTAN PHASE SYSTEM TIMING CHART (REC)

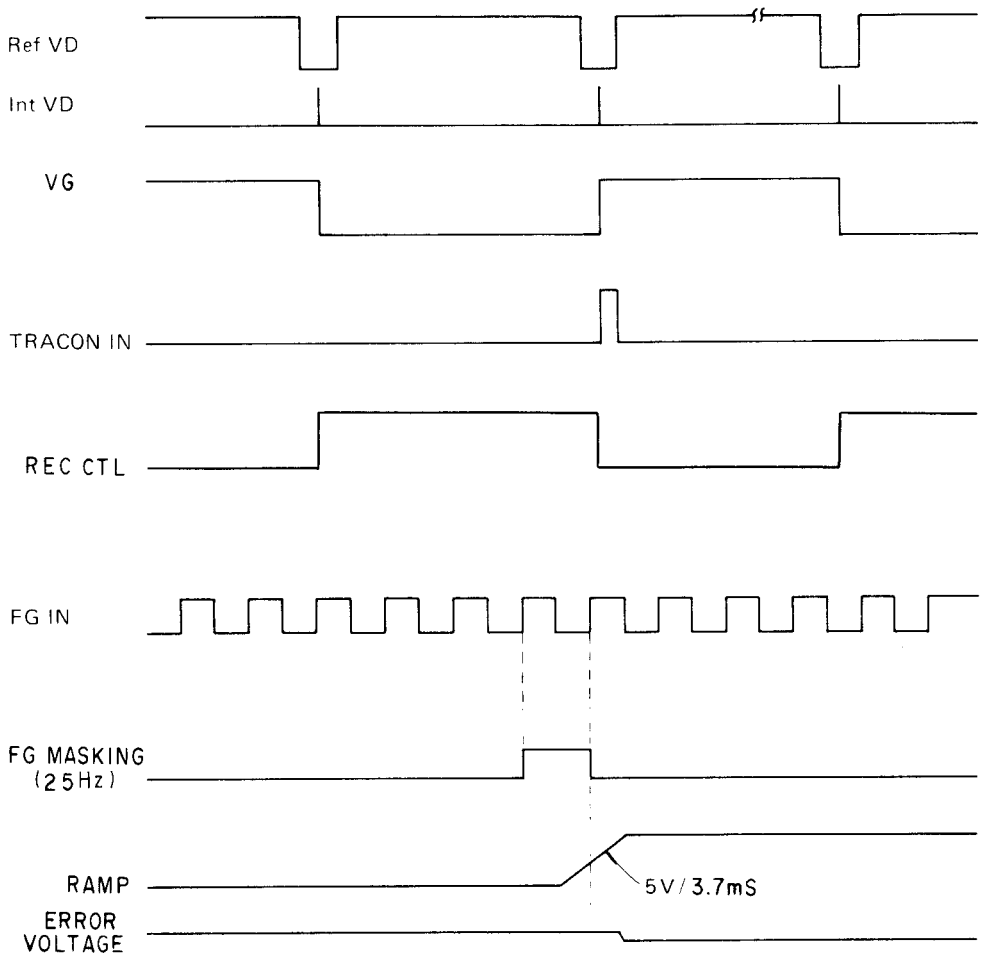

3-17. CAPSTAN PHASE SYSTEM TIMING CHART (PB)

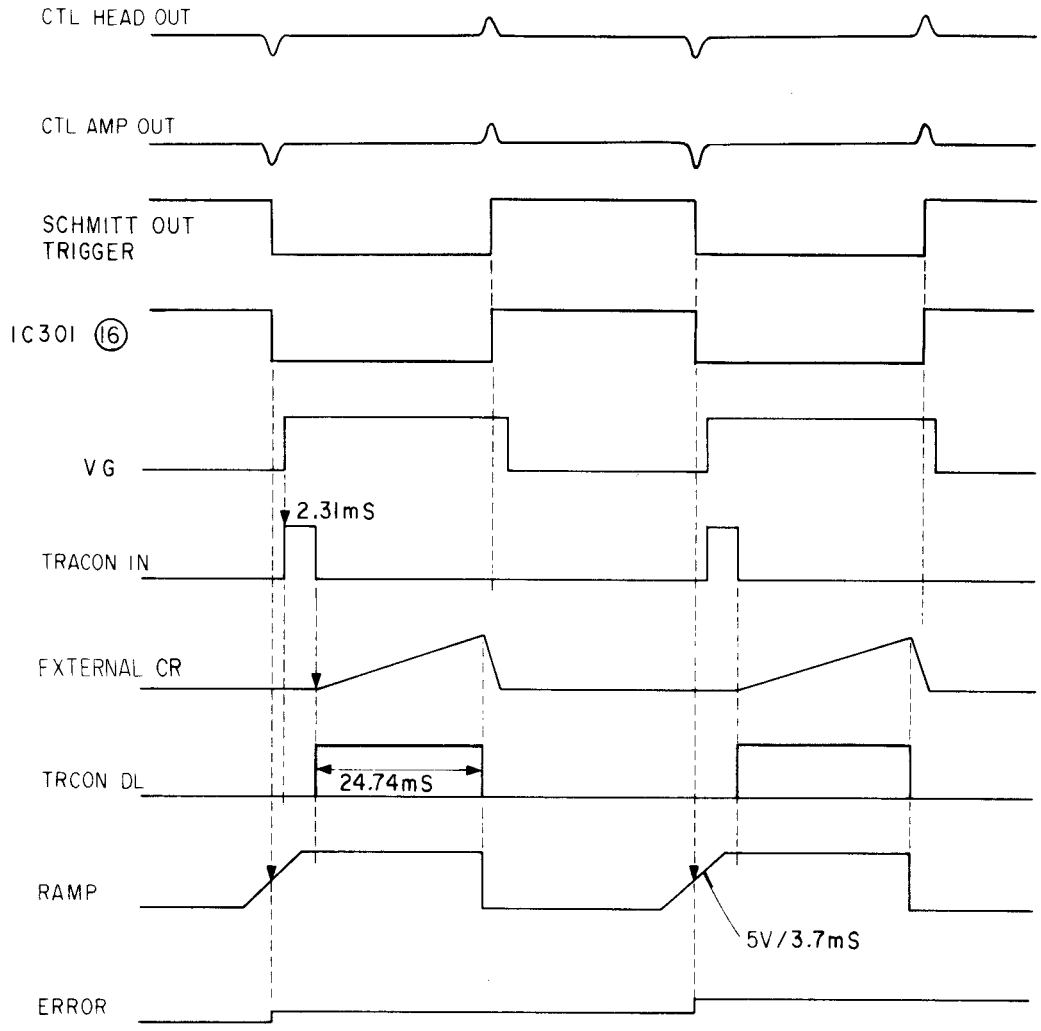

3-18. CAPSTAN SPEED SYSTEM TIMING CHART

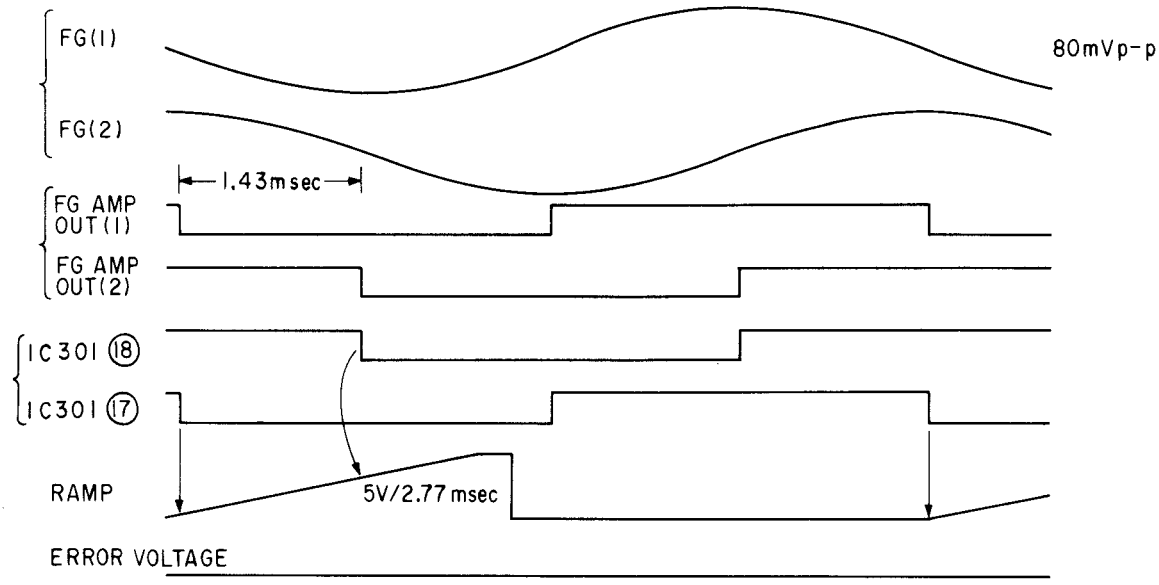

3-19. DRUM PHASE SYSTEM TIMING CHART

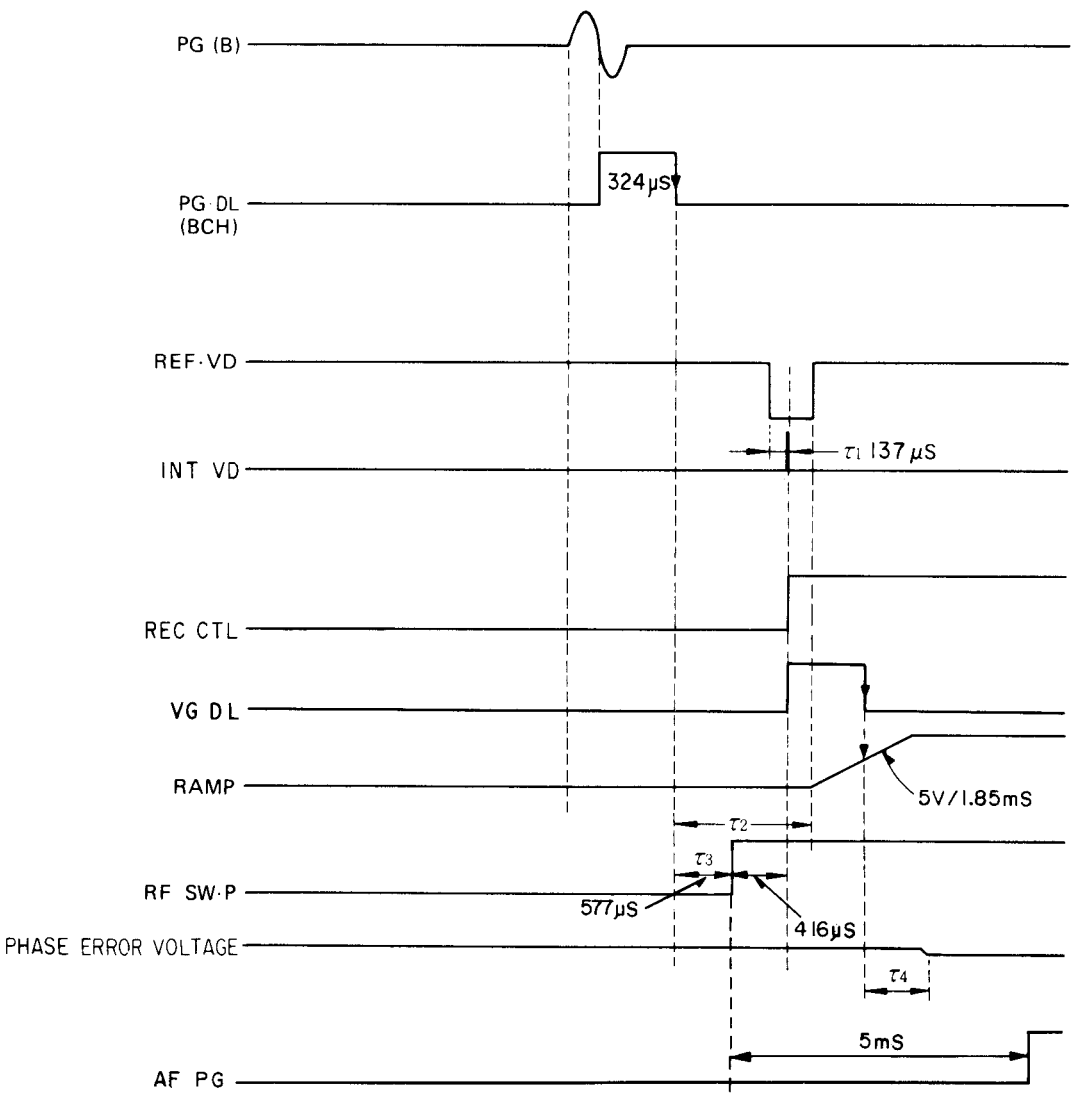

τ_1 REF VD DETECTION DELAY TIME
$\tau_{2,3}$ DIGITAL DL
τ_4 DATA EXCHANGE TIME

3-20. DRUM SPEED SYSTEM TIMING CHART

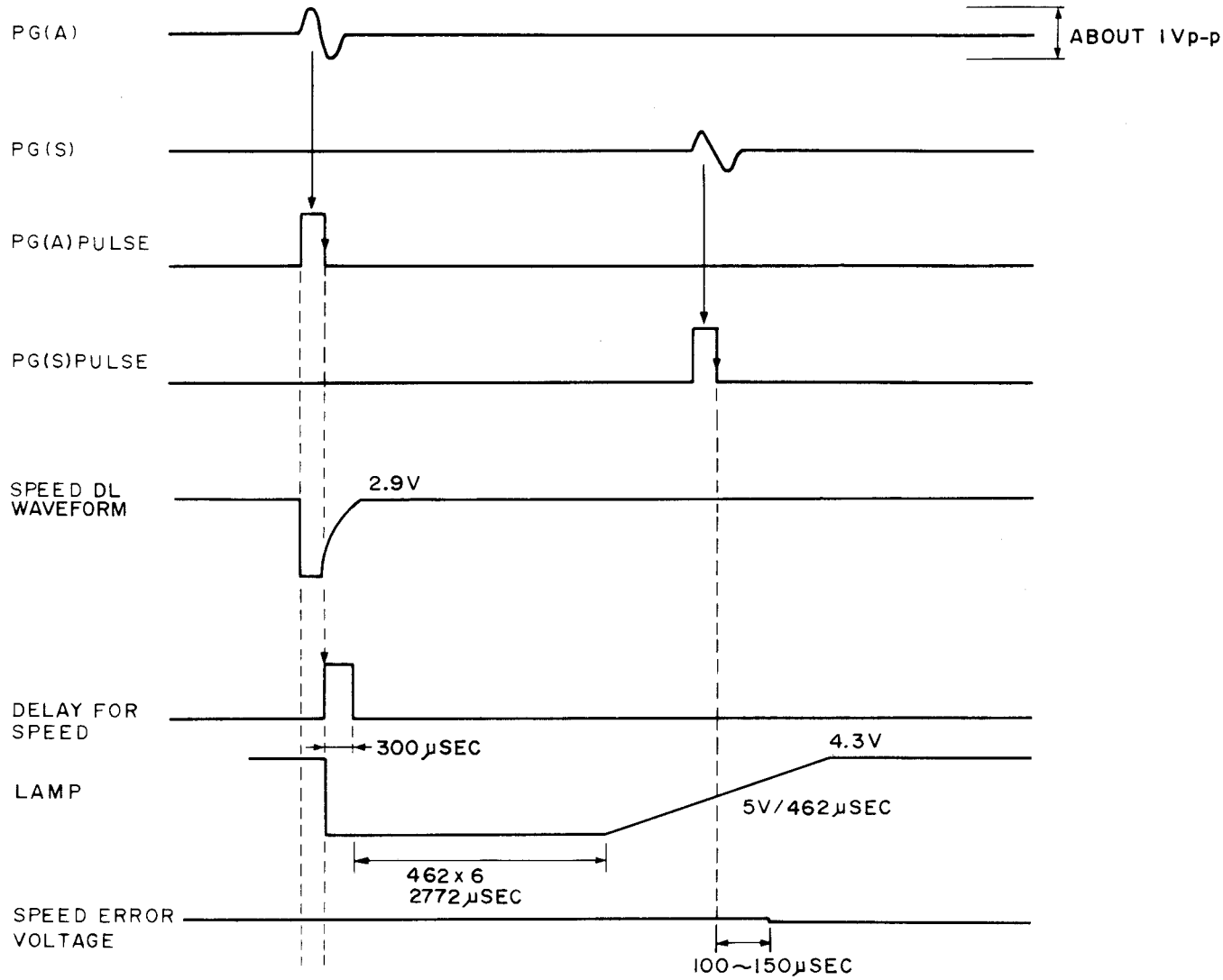

3-21. PG SIGNAL TIMING CHART

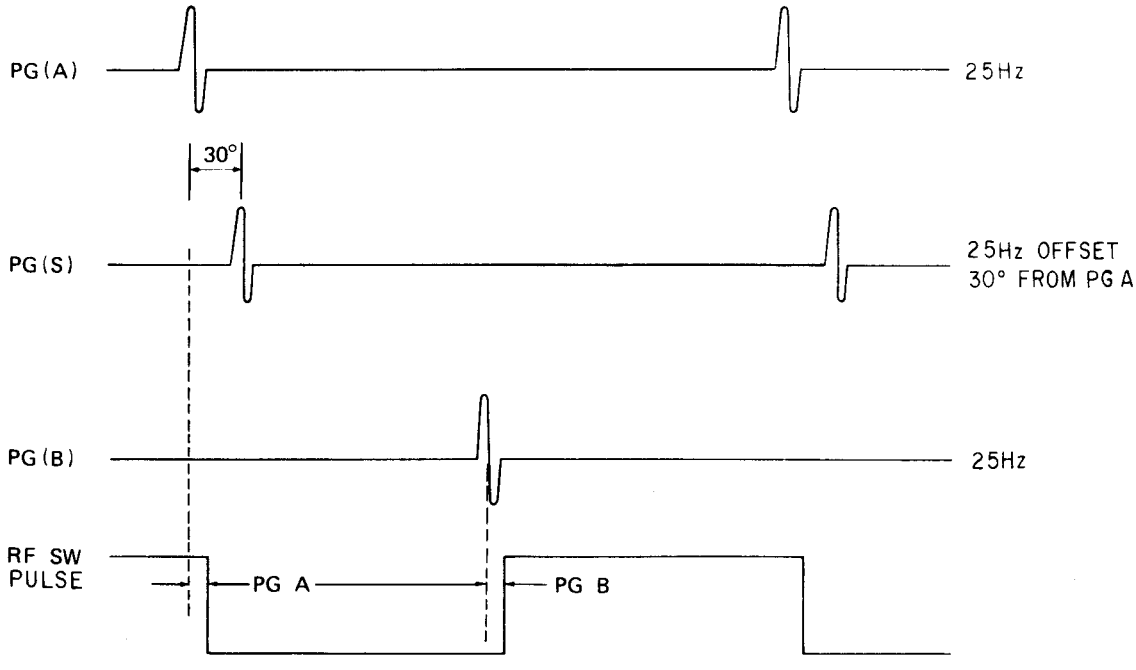

3-22. AUDIO BLOCK DIAGRAM

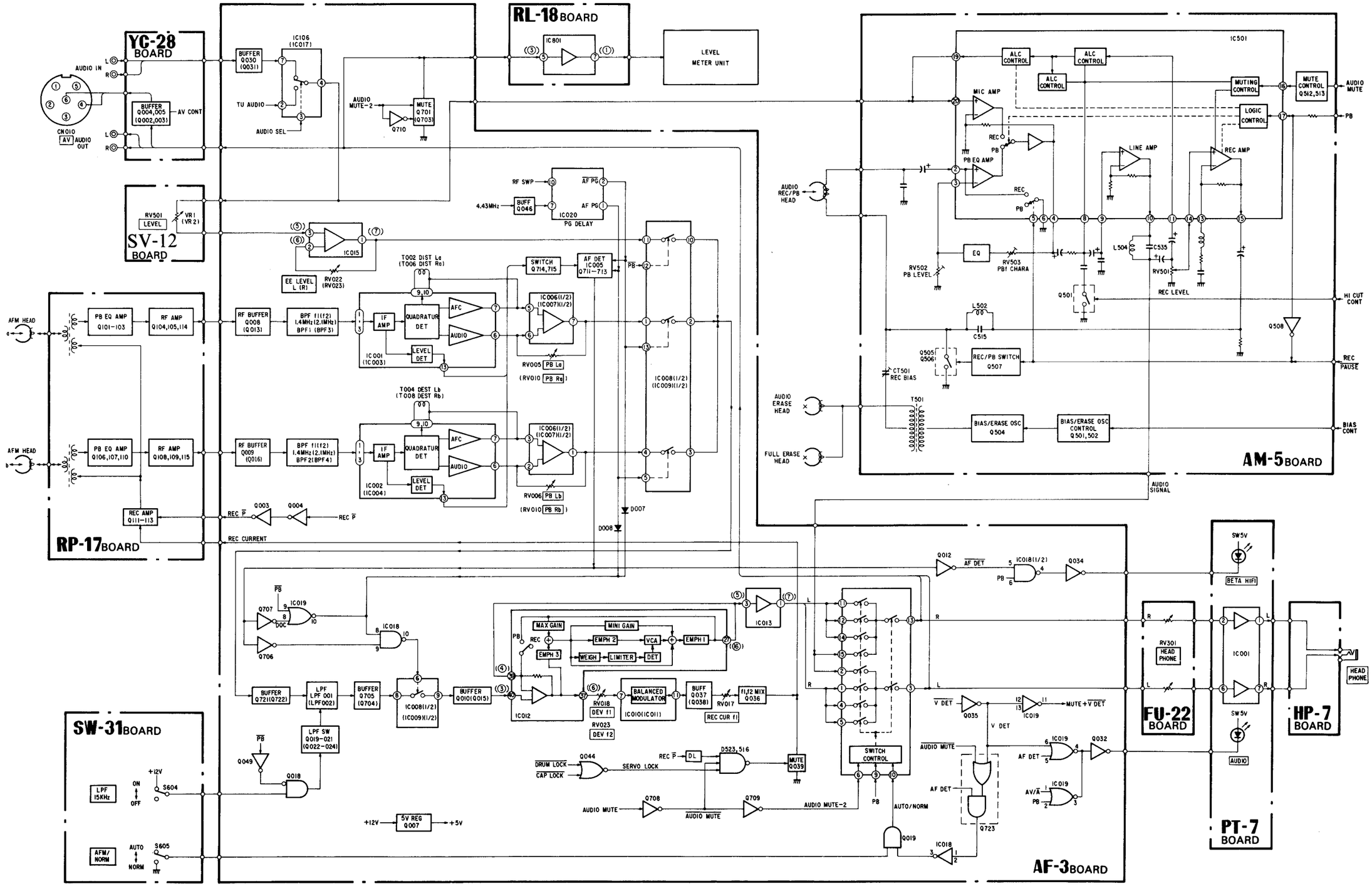

3-23. AUDIO LEVEL DIAGRAM (REC)

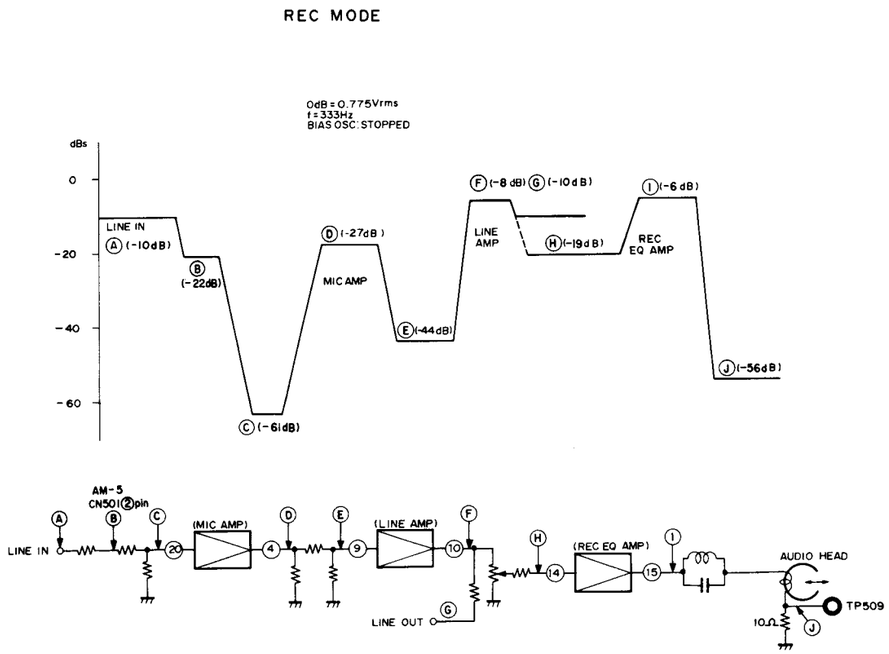

3-24. AUDIO LEVEL DIAGRAM (PB)

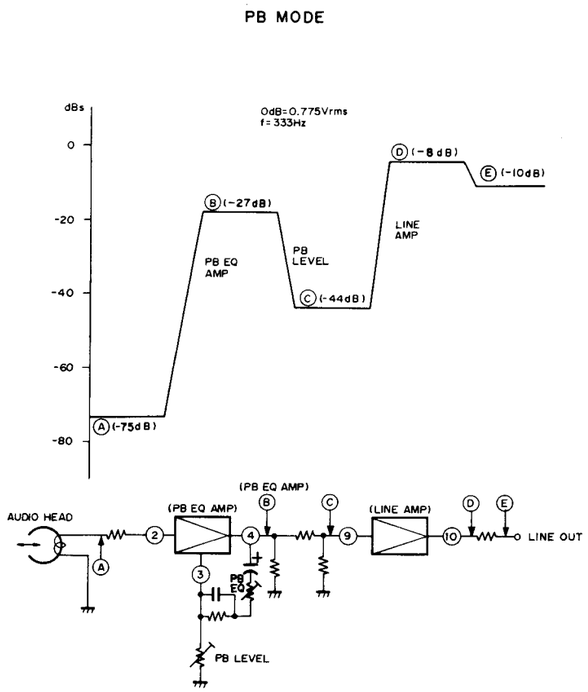

3-25. AFM LEVEL DIAGRAM (REC)

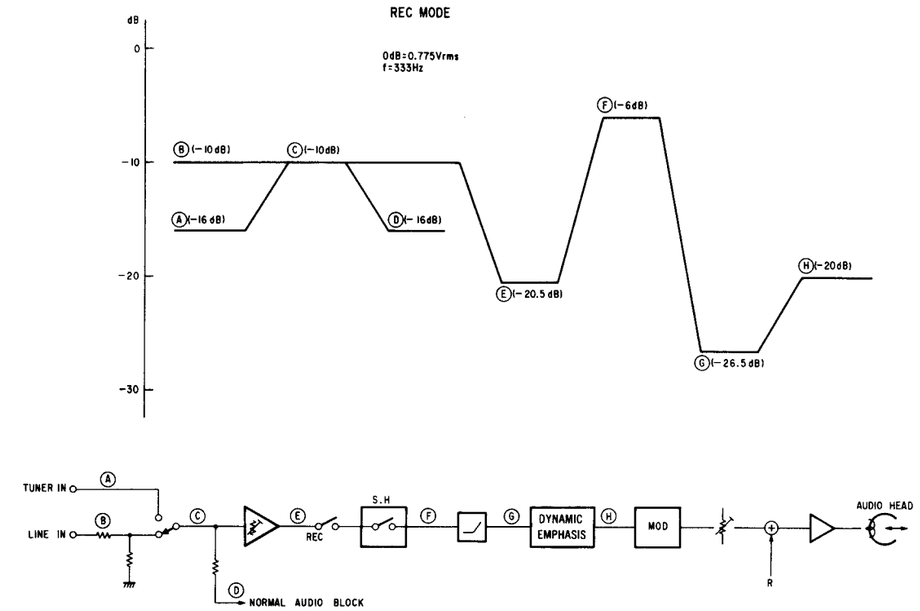

3-26. AFM LEVEL DIAGRAM (PB)

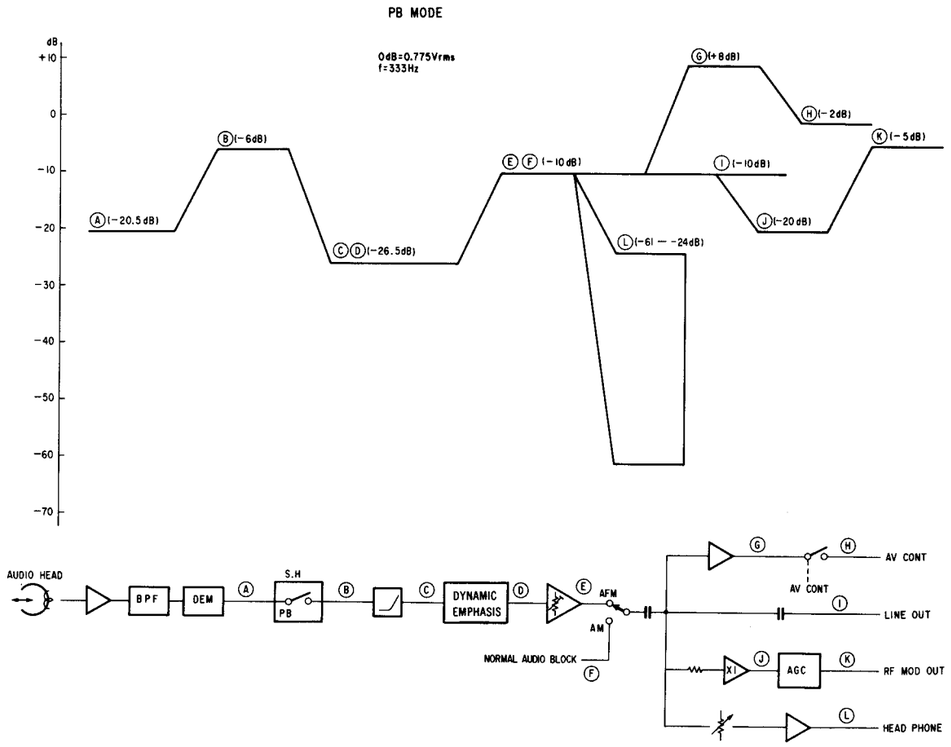

3-27. TIMER BLOCK DIAGRAM

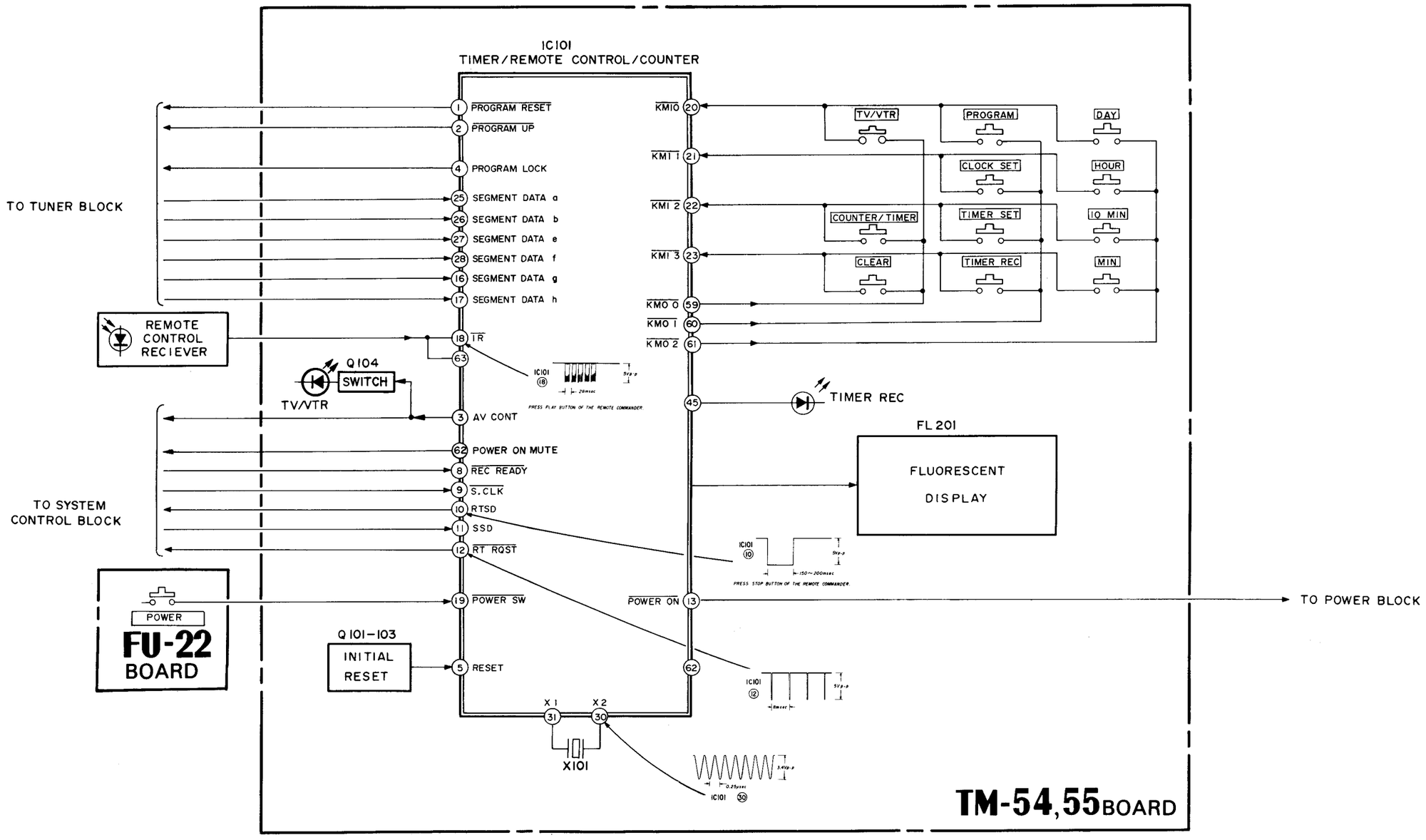

3-28. TUNER BLOCK DIAGRAM

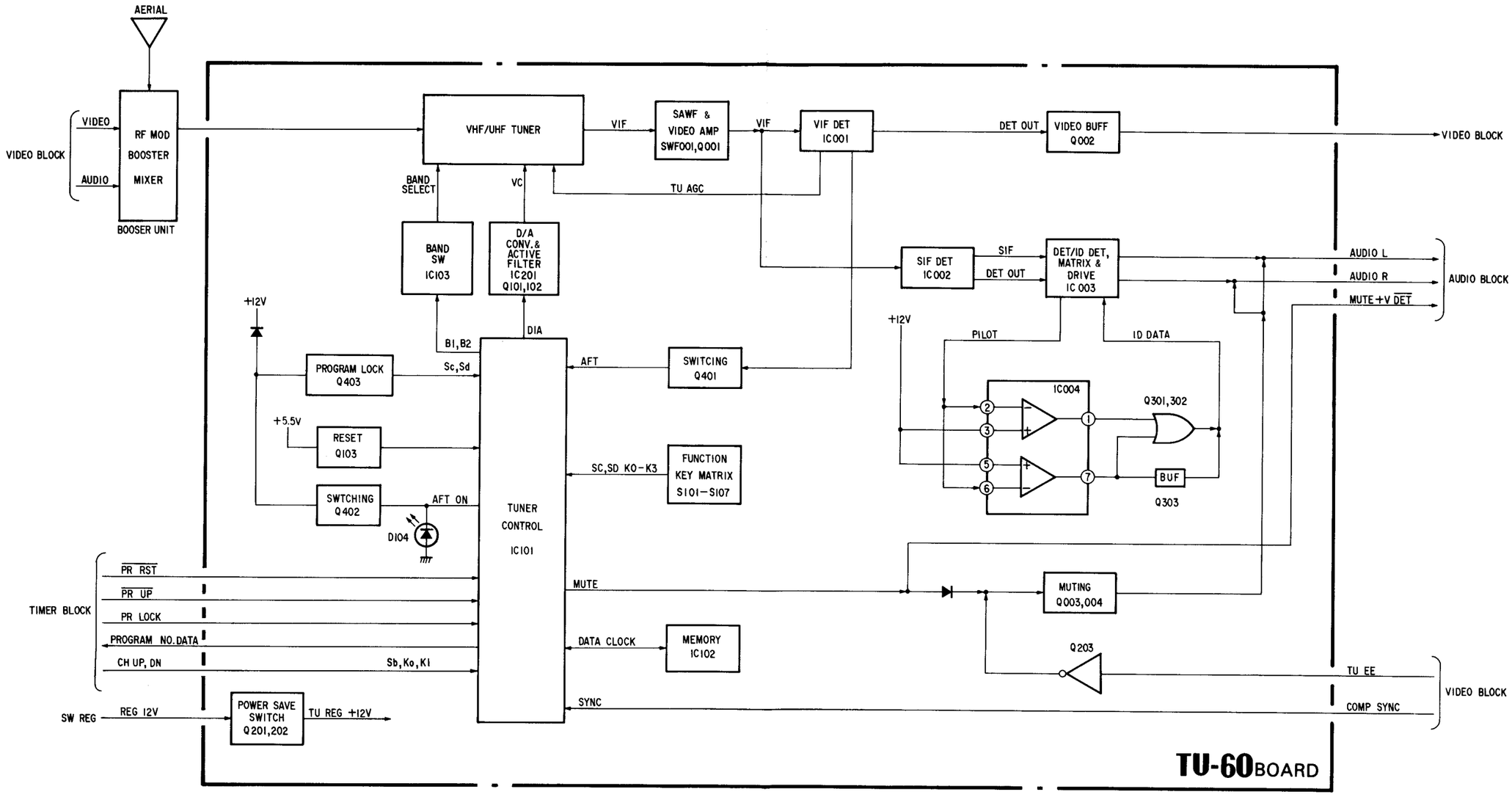

3-29. POWER BLOCK DIAGRAM

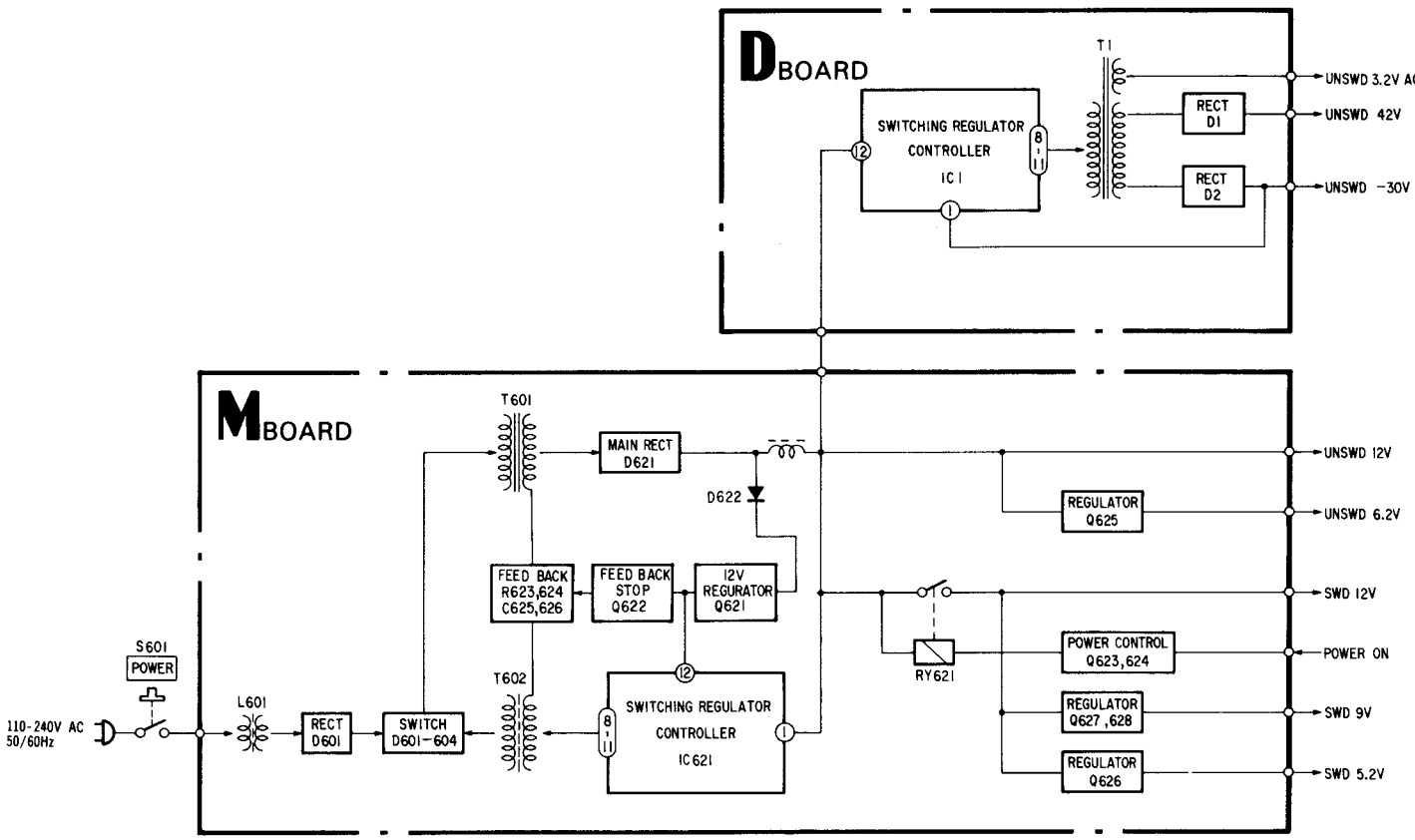

SECTION 4
SCHEMATIC DIAGRAM AND PRINTED WIRING BOARDS

4-1. FLAME SCHEMATIC DIAGRAM

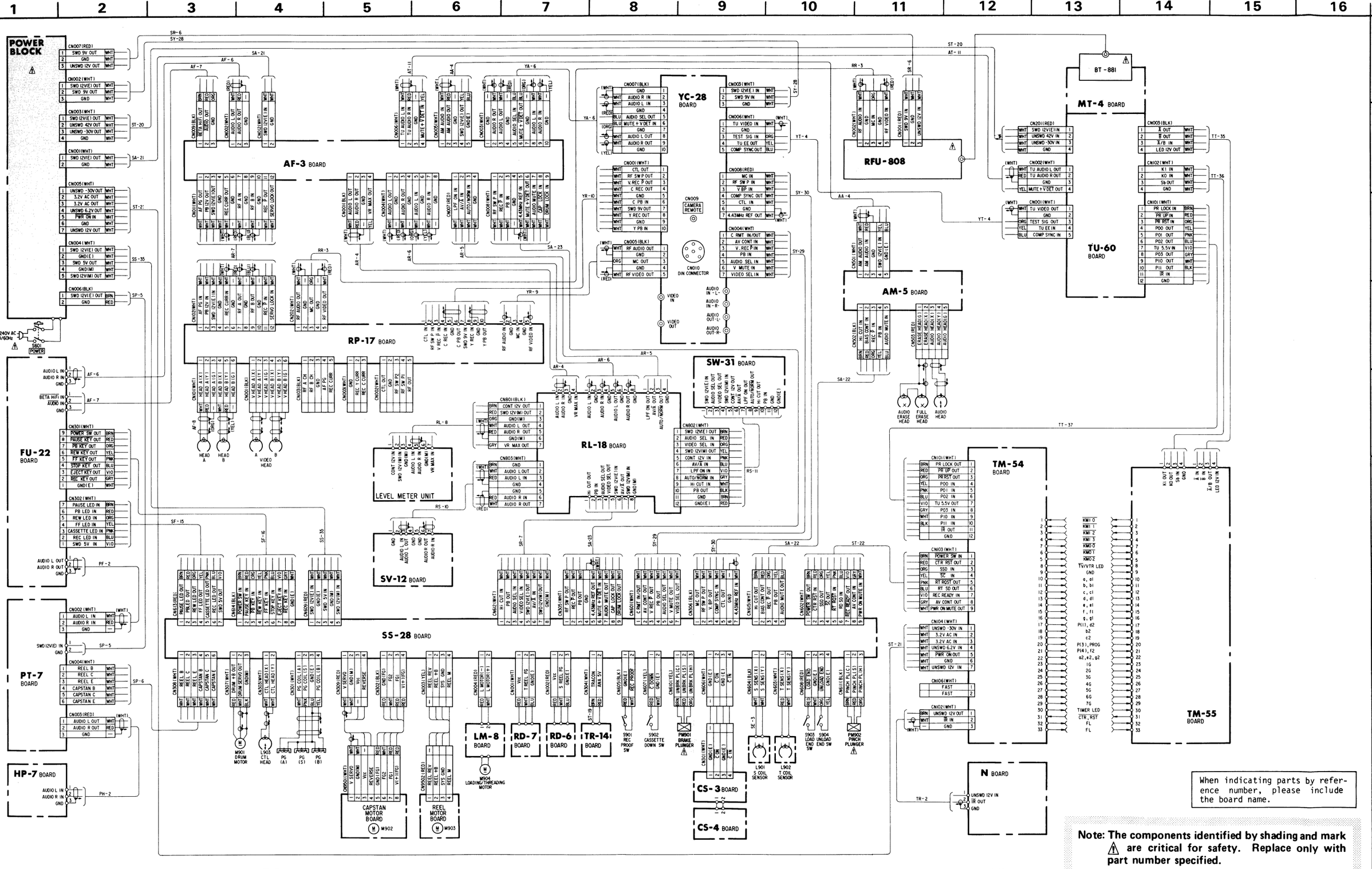

When indicating parts by reference number, please include the board name.

Note: The components identified by shading and mark ⚠ are critical for safety. Replace only with part number specified.

15 16

A B C D E F G H I J

TT-35 TT-36

A/B OUT LED 12V IN

1-55 RD

When indicating parts by reference number, please include the board name.

dentified by shading and mark r safety. Replace only with fied.

YC-28 BOARD (PAL/SECAM)

PAL — IC002 (7) REC/PB — 0.2Vp-p, H

PAL — IC006 (28) BF PB — 3.4Vp-p, H

IC009 (25) REC — V:0.5V/div H:0.1μsec/div

CN008 (2) REC / PB — 5Vp-p, 2V

PAL — IC004 (8) PB — 0.7Vp-p, H

IC006 (30) REC/PB — 4.4Vp-p, H

IC009 (29) PB — 1.6Vp-p, H

PAL — IC006 (1),(39) REC — (1) 0.7Vp-p (39) 1.3Vp-p, H

IC006 (33) REC / PB — 0.16Vp-p, 5.12MHz

IC009 (30) REC — 0.14Vp-p, H

PAL — IC006 (1),(7),(35) PB — (1) 0.2Vp-p (7) 0.1Vp-p (35) 0.6Vp-p, H

PAL — IC006 (37) PB — 0.35Vp-p, H

PAL — IC009 (32) PB — 0.5Vp-p, H

PAL — IC006 (5),(35) REC — (5) 0.1Vp-p (35) 0.7Vp-p, H

PAL — IC006 (39) PB — 0.4Vp-p, H

PAL — IC009 (35) REC — 2Vp-p, H

PAL — IC006 (14) REC / PB — 0.6Vp-p, 4.43MHz

PAL — IC009 (3) REC — 1Vp-p, H

PAL — IC009 (35) PB — 1.8Vp-p, H

IC006 (19) REC/PB — 13.3MHz

IC009 (6),(37) REC — (6) 1Vp-p (37) 0.4Vp-p, H

IC009 (38) PB — 0.36Vp-p, H

IC006 (23) COMP SYNC — 4Vp-p

IC006 (22) HD — 4.4Vp-p, H

REC / PB

IC009 (18) PB — V:0.2V/div H:0.1μsec/div

IC401 (26) PB — 0.4Vp-p, H

IC009 (21) PB — 0.5Vp-p, H

CN005 (6) TEST SIGNAL — 1Vp-p, H

YC-28 BOARD (SECAM)

IC002 (7) REC/PB — 0.4Vp-p, H

IC009 (3) REC 1Vp-p
IC009 (35) REC 1.8Vp-p — H

IC002 (9) REC/PB — 4Vp-p, 2H

IC009 (32) PB — 0.5Vp-p, H

IC004 (8) REC
IC009 (32) REC — 0.9Vp-p, 2H

IC009 (35) PB — 2.2Vp-p, H

IC004 (8) PB 0.7Vp-p
IC006 (37) PB 0.1Vp-p — H

IC006 (1) REC 1Vp-p
IC006 (5) REC 0.09Vp-p
IC006 (35) REC 1Vp-p — H

IC006 (1) PB 0.2Vp-p
IC006 (7) PB 0.1Vp-p — H

IC006 (39) REC — 1.4Vp-p, 2H

RP-17 BOARD (PAL/SECAM)

IC001 (4),(25) REC — 4Vp-p, H

IC001 (14) PB — 0.5Vp-p, 2V

IC001 (16),(19) PB — 0.1Vp-p, 2V

CN101 (1)-(2),(4)-(5) REC — H:1μsec/div V:0.1V/div

CN103 (1),(2) PB — H:1μsec/div V:0.05V/div

4-2. RP-17 (LOW-CONVERTED CHROMA, Y-FM & AFM SIGNALS, RECORD/PLAYBACK AMP), YC-28 (Y & CHROMA SIGNALS RECORD/PLAYBACK PROCESS) SCHEMATIC DIAGRAM

– Ref. No. RP-17 BOARD : 2000 series, YC-28 BOARD : 1000 series –

- All resistors are in ohms, 1/6W unless otherwise noted.
- All capacitors are in μF (p:pF) unless otherwise noted. 50V or less are not indicated except for electrolytic capacitors.
- All variable and semi-fixed resistors have characteristic curve B, unless otherwise noted.
- : Nonflammable resistor
- : Fusible resistor
- : B + bus.
- The voltage value is a reference value between the grounding when the color bar signal is received from a color bar generator.
- The voltage value is measured using a digital tester (10MΩ).

Note: The components identified by shading and mark ⚠ are critical for safety. Replace only with part number specified.

When indicating parts by reference number, please include the board name.

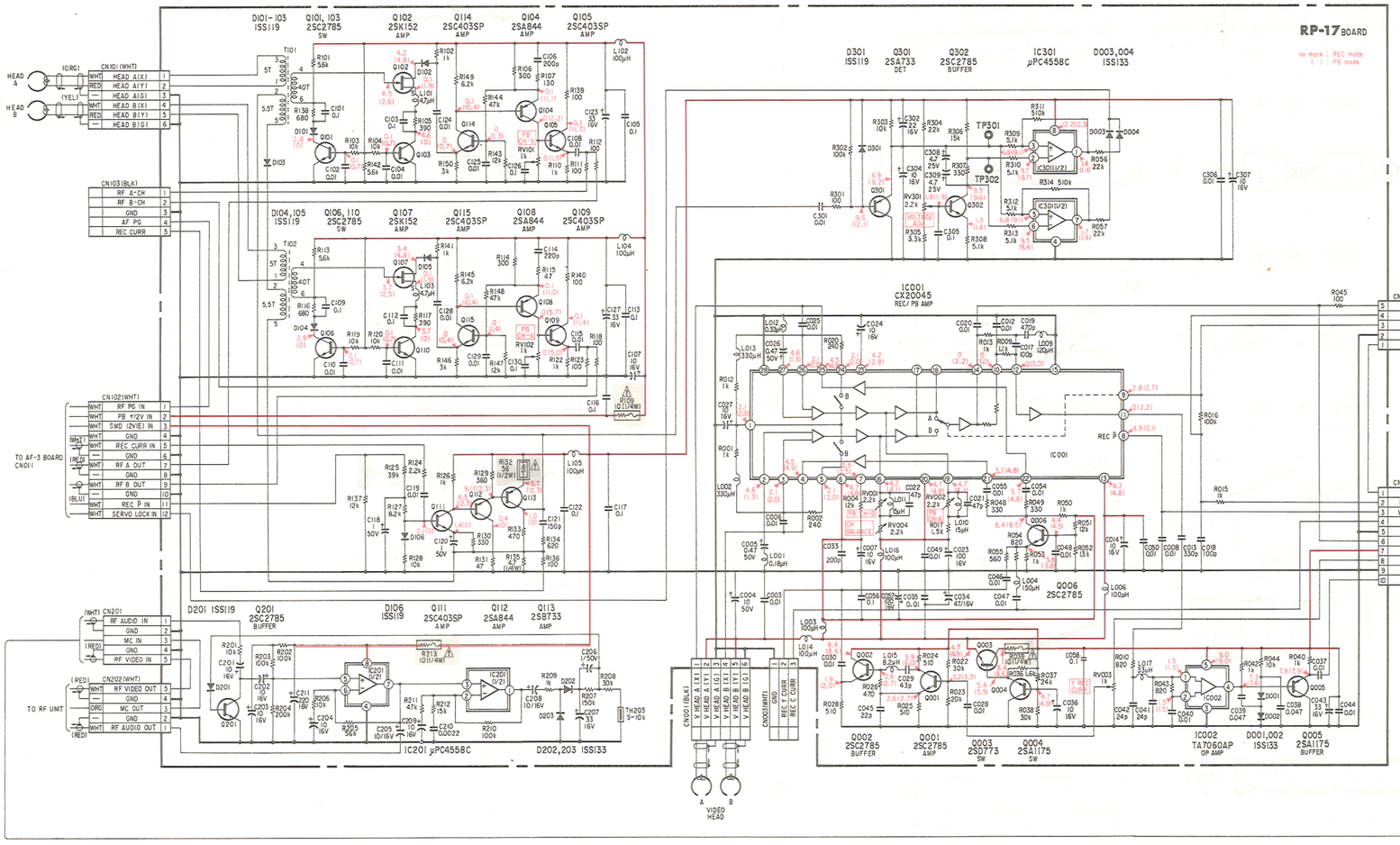

15 16 17 18 19 20 21 22 23 24 25 26 27 28 29 30 31

A B C D E F G H I J

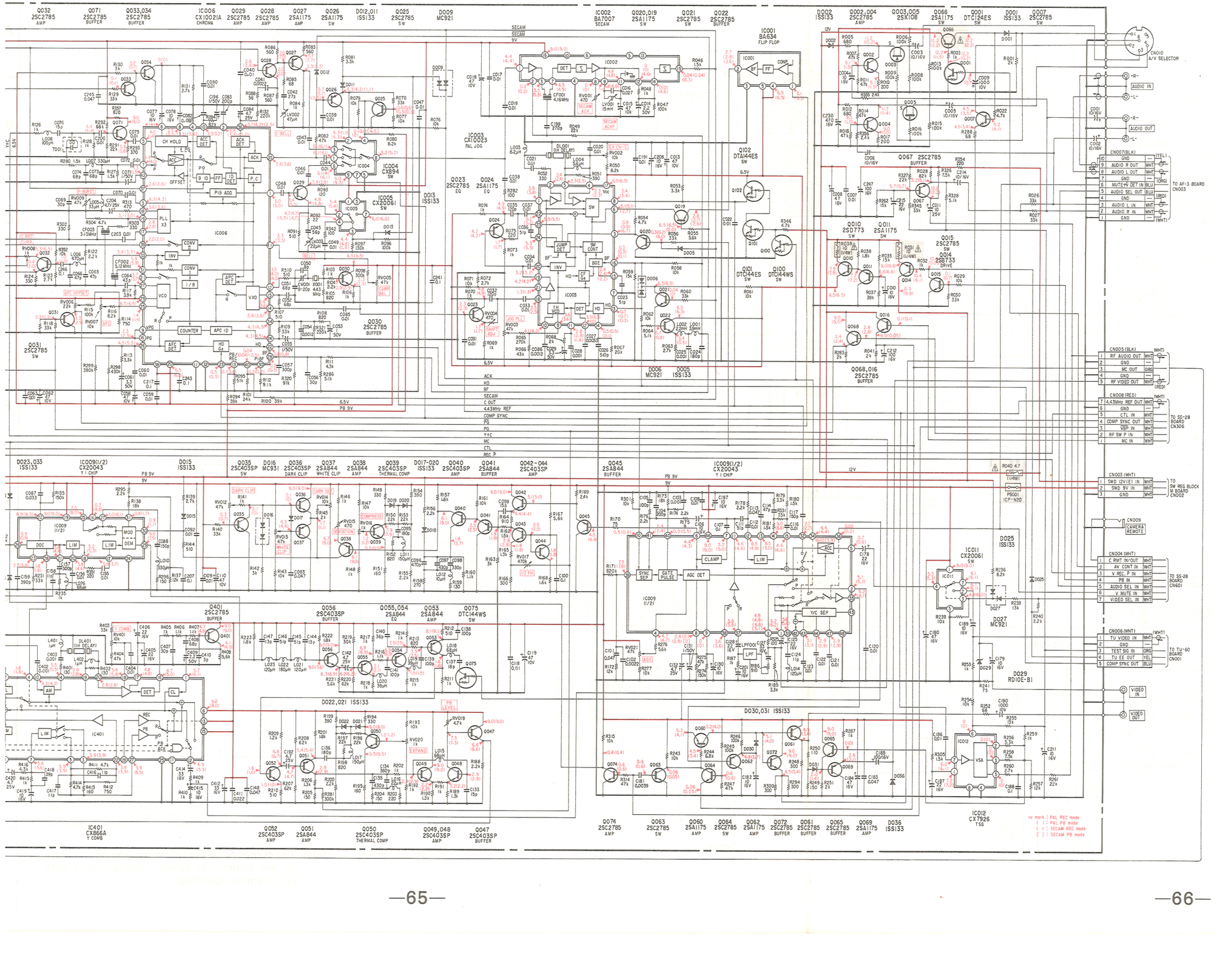

RP-17 (LOW-CONVERTED CHROMA, Y-FM & AFM SIGNALS, RECORD/PLAYBACK AMP), YC-28 (Y & CHROMA SIGNALS RECORD/PLAYBACK PROCESS) PRINTED WIRING BOARDS

– Ref. No. RP-17 BOARD : 2000 series, YC-28 BOARD : 1000 series –

	1	2	3	4	5	6	7	8	9	10	11	12	13	14	15	16
A	Q, IC			101 102 105 103 111 301 114 104 113 112	107 110 IC301 115 108 109 302 106	201 IC201 004 003		006 002	IC001 001	IC002 005			501–504 029 025,026 027,028 IC005 IC004	IC002 IC001 033, 034 032 020 019	102 010 011 030 023 IC006	IC003 024 103	
B	D			101 102 106 301	103	104 105 003 004	201 202, 203				001 002		013	012 011 038 014 005			
C	ADJ TP			RV101 TP301 TP302	RV102 RV301			RV003	RV004 RV002 RV001				LV501 LV003 LV002	RV501	RV001 RV009 RV005 LV001 RV008	RV002 RV004 CV001	RV007	RV

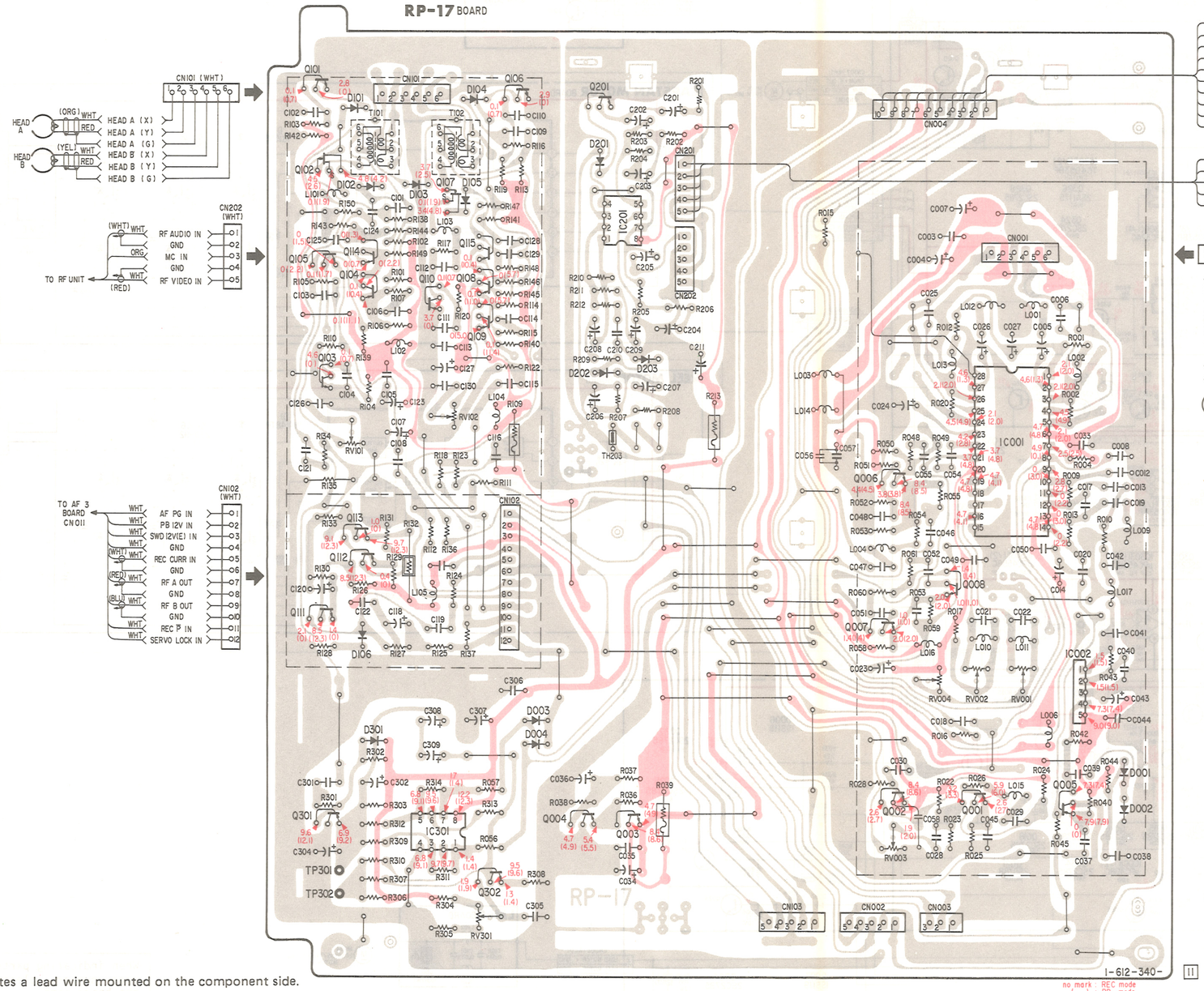

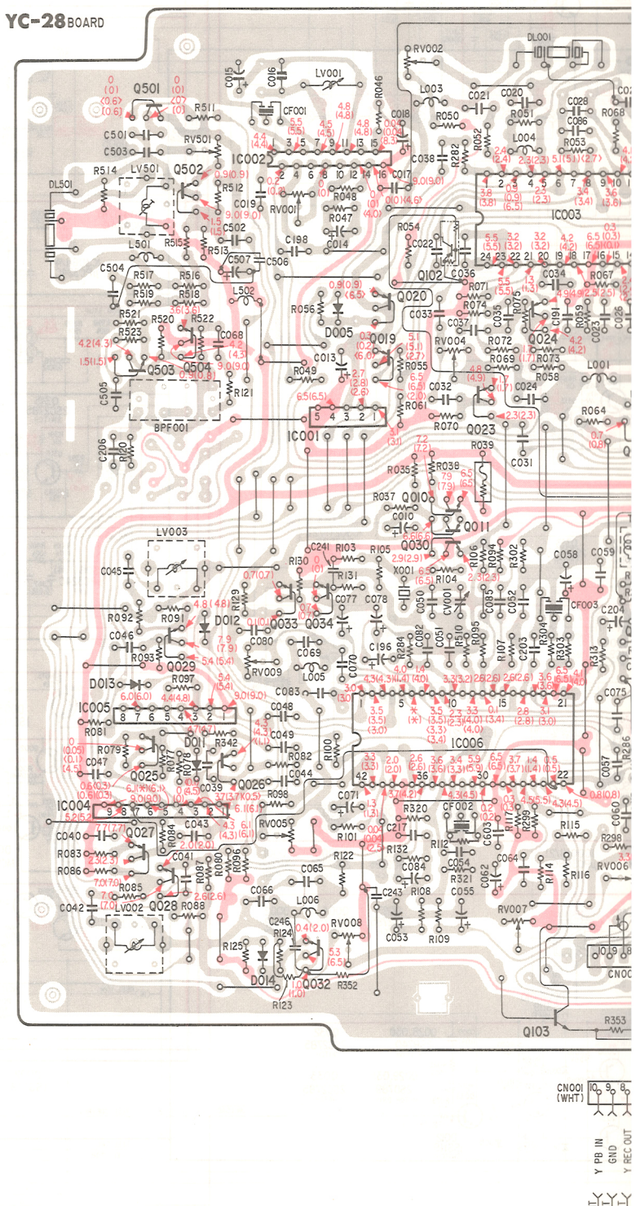

- ● —○— : indicates a lead wire mounted on the component side.
- ● —●— : indicates a lead wire mounted on the printed side.
- ● : soldering side
- ● : B+ pattern

12 13 14 15 16 17 18 19 20 21 22 23 24 25 26

A B C D E F G H I J

501-504 029 025,026 027,028 IC005 IC004 IC002 IC001 033,034 032 020 019 102 010 011 030 023 IC006 IC003 024 103 022 071 031 021 070 014, 015 IC401 068 401 IC009 016 047-050 044,043 045 042 100 101 035-038 074 075 051 041 056 052 054 053 064 055 040 039 069 063,062 072 065 IC011 IC012 060,061 001 004 066 002 067 005 007 003	Q, IC
013 012 011 038 014 005 006 009 025 015 021 022 017 016 033,023 018 019 020 036 031 030 002 027 029 001	D
LV501 LV003 LV002 RV501 RV001 RV009 RV005 LV001 RV008 RV002 RV004 CV001 RV007 RV006 RV003 RV401 RV021 RV020 RV019 RV014 RV010 RV017 RV015 RV016 RV012 RV013	ADJ TP

YC-28 BOARD

VIDEO OUT
VIDEO IN
-R-
-L-
AUDIO OUT
AUDIO IN
CN009 CAMERA REMOTE
CN010 A/V SELECTOR

1-612-339-11

CN001 (WHT): Y PB IN, GND, Y REC OUT, SWD 9V OUT, C PB IN, GND, C REC OUT, V REC P OUT, RF SW P OUT, CTL OUT

CN003 (WHT): GND, SWD 9V IN, SWD 12VED IN

CN008 (RED): GND, 4.433MHz REF OUT, GND, CTL IN, COMP SYNC OUT, V PB IN, RF SW P IN, MC IN

CN004 (WHT): VIDEO SEL IN, V MUTE IN, AUDIO SEL IN, PB IN, V REC P IN, AV CONT IN, C RMT IN/OUT

CN005 (BLK): RF VIDEO OUT, GND, MC OUT, GND, RF AUDIO OUT

CN006 (WHT): COMP SYNC OUT, TU EE OUT, TEST SIG IN, GND, TU VIDEO IN

CN007 (BLK): GND, AUDIO R OUT, AUDIO L OUT, GND, MTUE-FVDET IN, AUDIO SEL OUT, GND, AUDIO L IN, AUDIO R IN, GND

TO SW REG BLOCK (M BOARD) CN002
TO SS-28 BOARD CN305
TO SS-28 BOARD CN601
TO TU-60 BOARD CN001
TO AF-3 BOARD CN003

no mark : PAL REC mode
( ) : PAL PB mode
< > : SECAM REC mode
[ ] : SECAM PB mode

When indicating parts by reference number, please include the board name.

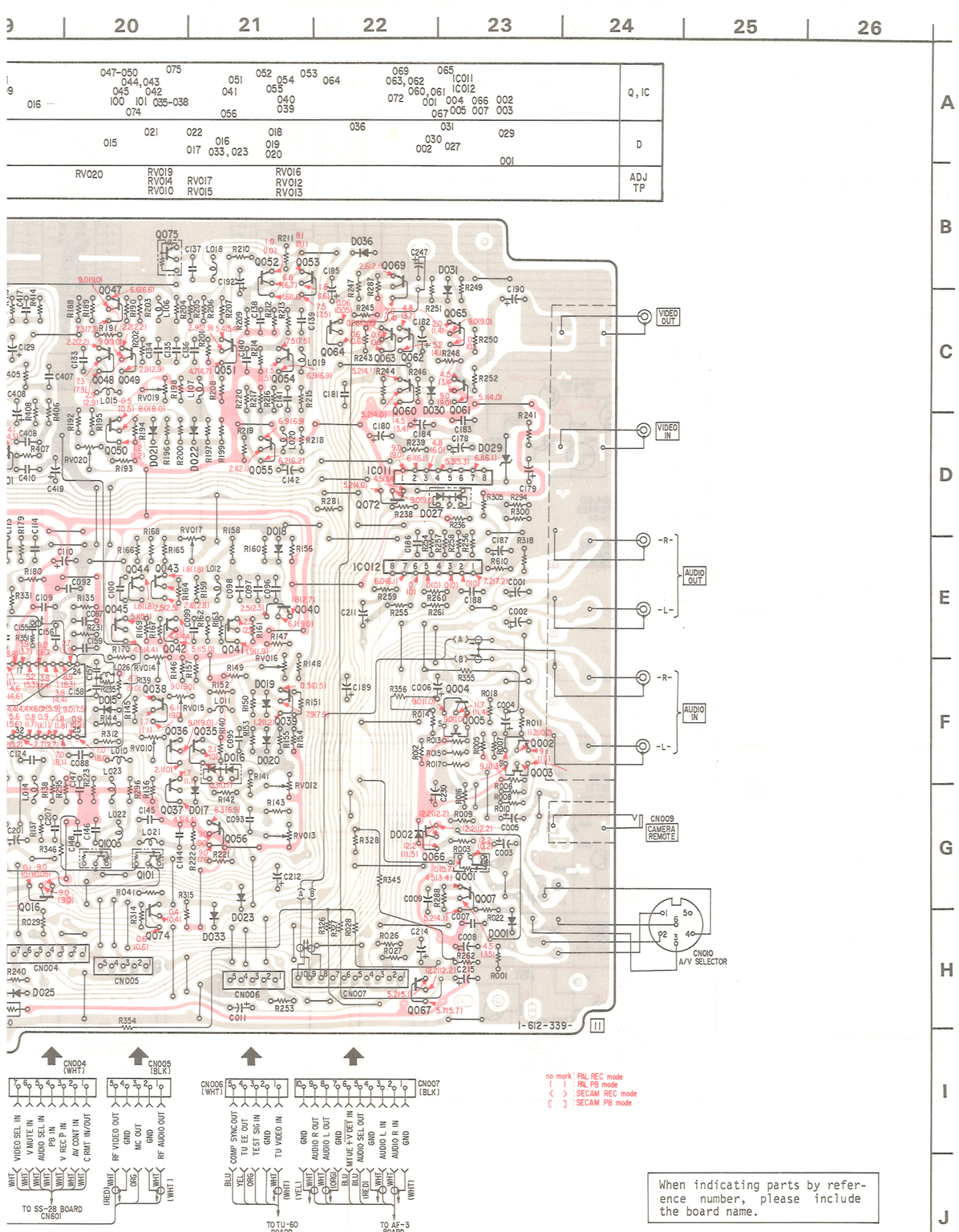

no mark : PAL REC mode
( ) : PAL PB mode
< > : SECAM REC mode
[ ] : SECAM PB mode

When indicating parts by reference number, please include the board name.

SERVO, SYSTEM CONTROL SERVO, SYSTEM CONTROL

4-3. SS-28 (SERVO/SYSTEM CONTROL), FU-22 (FUNCTION SWITCH & IND), TR-14 (TRACKING CONTROL), RD-6 (ROTATION DETECTOR), RD-7 (ROTATION DETECTOR), LM-8 (NOISE FILTER), CS-3 (CASSETTE ON SWITCH), CS-4 (CASSETTE IN S

– Ref. No. SS-28 BOARD : 4000 series, FU-22 BOARD : 7300 series, TR-14 BOARD : 5700 series, RD-6 BOARD : 6700 series, RD-7 BOARD : 6800 series, LM-8 BOARD : 7100 series, CS-3, CS-4 BOARD : 6300 series, PT-7 BOARD : 7700 series, REEL MOTOR BOARD : 7500 series –

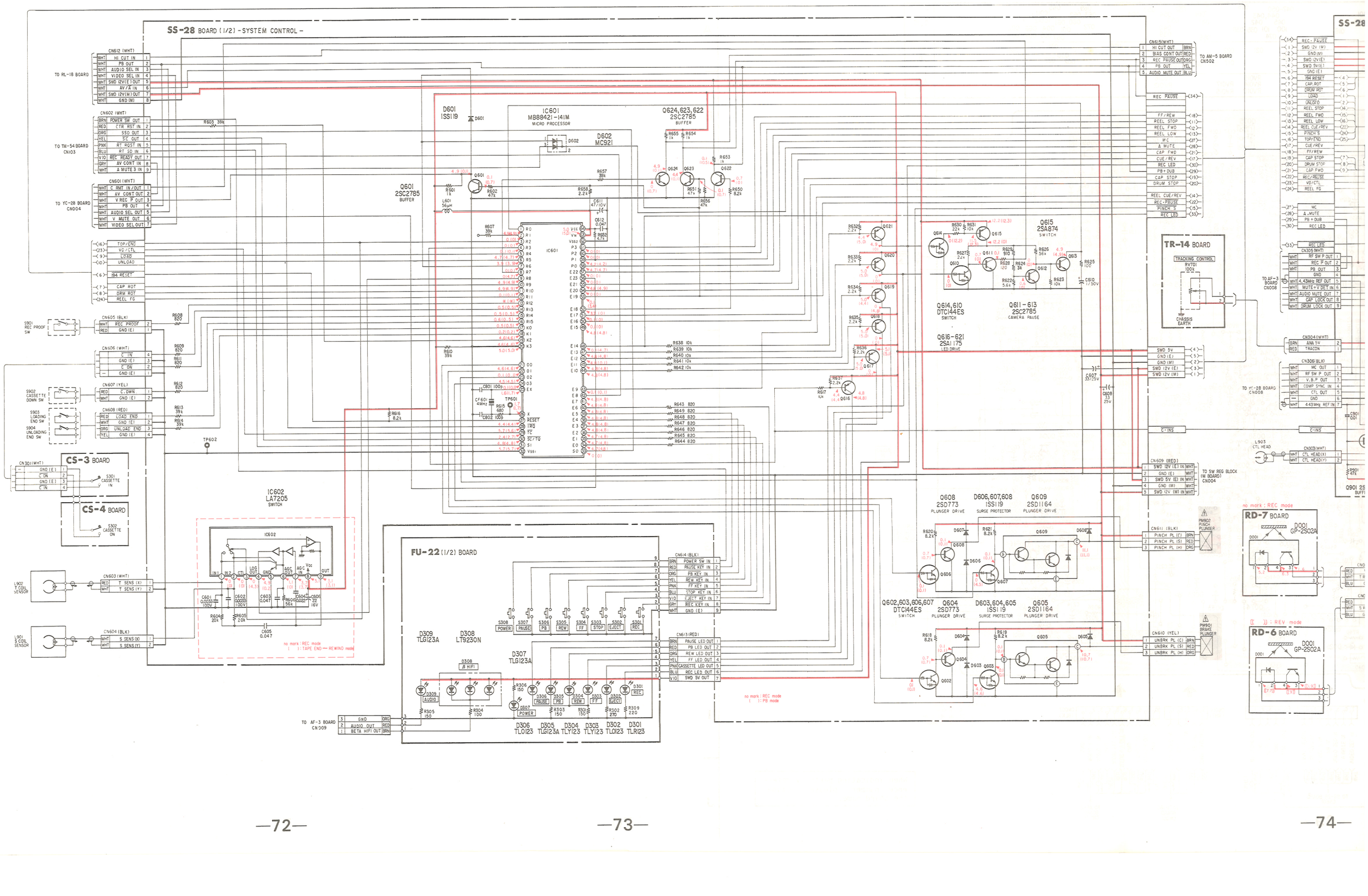

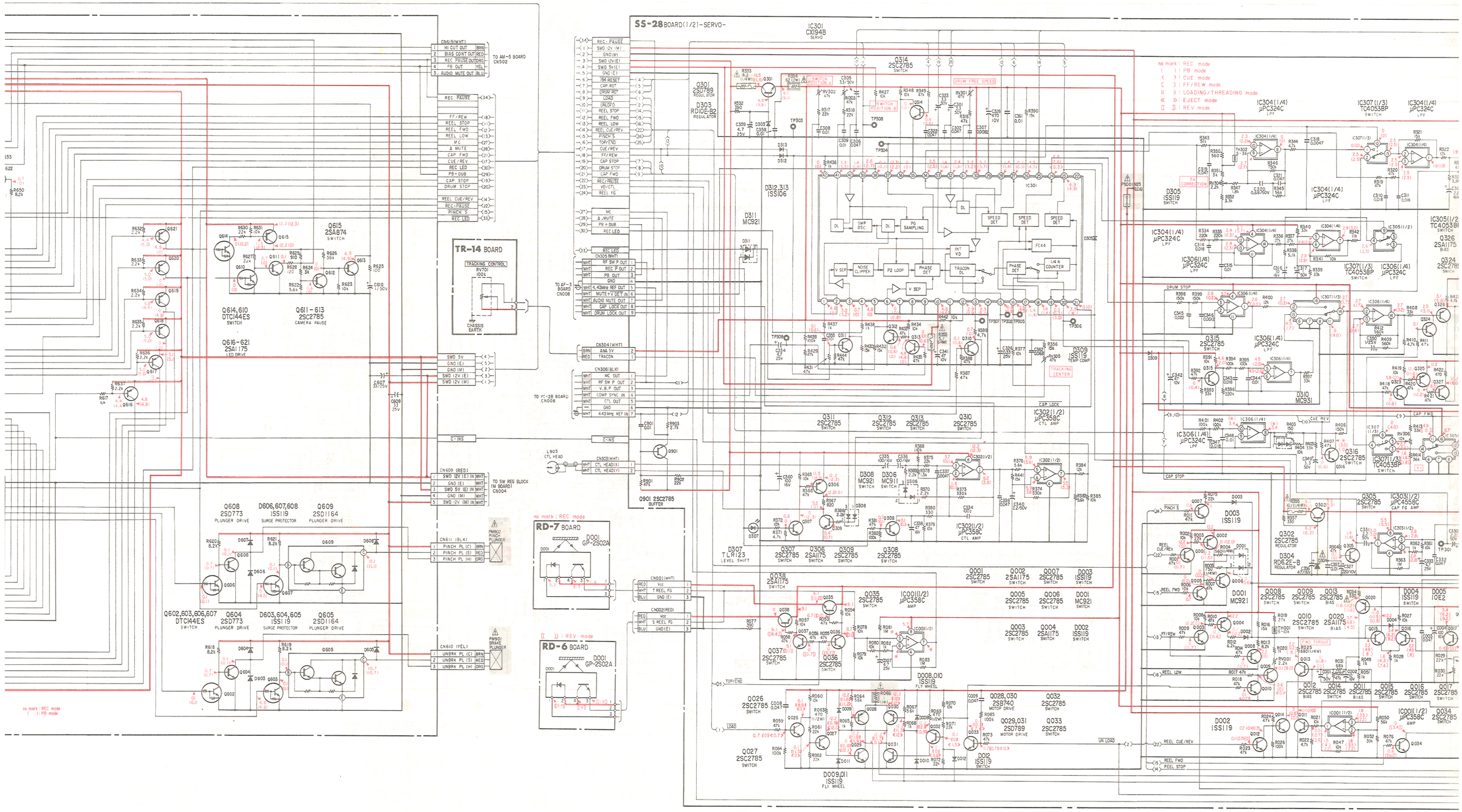
SS-28 BOARD(1/2)-SERVO-
IC301 CX194B SERVO
TR-14 BOARD
TRACKING CONTROL
CHASSIS EARTH
RD-7 BOARD
RD-6 BOARD
TO AM-5 BOARD CN502
TO AF-3 BOARD CN008
TO YC-28 BOARD CN008
TO SW REG BLOCK (M BOARD) CN004
Q614,610 DTC144ES SWITCH
Q611 – 613 2SC2785 CAMERA PAUSE
Q615 2SA874 SWITCH
Q616 – 621 2SA1175 LED DRIVE
Q608 2SD773 PLUNGER DRIVE
D606,607,608 ISS119 SURGE PROTECTOR
Q609 2SD1164 PLUNGER DRIVE
Q602,603,606,607 DTC144ES SWITCH
Q604 2SD773 PLUNGER DRIVE
D603,604,605 ISS119 SURGE PROTECTOR
Q605 2SD1164 PLUNGER DRIVE
Q301 2SD789 REGUL.STOR
D303 RD10E-B2 REGULATOR
Q314 2SC2785 SWITCH
Q901 2SC2785 BUFFER
D307 TLR123 LEVEL SHIFT
D311 MC921
D312,313 ISS106
Q311 2SC2785 SWITCH
Q312 2SC2785 SWITCH
Q313 2SC2785 SWITCH
Q310 2SC2785 SWITCH
IC302(1/2) μPC358C CTL AMP
Q038 2SA1175 SWITCH
Q035 2SC2785 SWITCH
IC001(1/2) μPC358C AMP
Q037 2SC2785 SWITCH
Q036 2SC2785 SWITCH
Q026 2SC2785 SWITCH
Q027 2SC2785 SWITCH
D008,010 ISS119 FLY WHEEL
D009,011 ISS119 FLY WHEEL
Q028,030 2SB740 MOTOR DRIVE
Q029,031 2SD789 MOTOR DRIVE
Q032 2SC2785 SWITCH
Q033 2SC2785 SWITCH
D012 ISS119 SWITCH
Q001 2SC2785 SWITCH
Q002 2SA1175 SWITCH
Q007 2SC2785 SWITCH
D003 ISS119 SWITCH
Q005 2SC2785 SWITCH
Q006 2SC2785 SWITCH
D001 MC921 SWITCH
Q003 2SC2785 SWITCH
Q004 2SA1175 SWITCH
D002 ISS119 SWITCH
D305 ISS119 SWITCH
D309 ISS119 TEMP COMP
D310 MC931
Q315 2SC2785 SWITCH
Q316 2SC2785 SWITCH
IC304(1/4) μPC324C LPF
IC306(1/4) μPC324C LPF
IC307(1/3) TC4053BP SWITCH
IC305(1/2) TC4053BP SWITCH
Q326 2SA1175 BIAS
Q324 2SC2785 SWITCH
Q325 2SC2785 SWITCH
Q327 2SC2785 SWITCH
IC303(1/2) μPC4558C CAP FG AMP
D304 RD6.2E-B REGULATOR
D302 2SC2785 REGULATOR
D001 MC921
D004 ISS119 SWITCH
D005 10E2
Q008 2SC2785 SWITCH
Q009 2SC2785 SWITCH
Q013 2SC2785 BIAS
Q010 2SC2785 SWITCH
Q020 2SA1175 BIAS
Q015 2SC2785 SWITCH
Q016 2SC2785 SWITCH
Q012 2SC2785 BIAS
Q014 2SC2785 SWITCH
Q011 2SC2785 BIAS
Q017 2SC2785 SWITCH
Q034 2SC2785 SWITCH
IC001(1/2) μPC358C AMP
D002 ISS119 SWITCH
Q012 2SC2785 SWITCH
Q003 2SC2785 SWITCH
Q004 2SA1175 SWITCH
D002 ISS119 SWITCH
Q001 2SC2785 SWITCH
Q002 2SA1175 SWITCH
Q007 2SC2785 SWITCH
D003 ISS119 SWITCH
Q005 2SC2785 SWITCH
Q006 2SC2785 SWITCH
D001 MC921 SWITCH

SERVO, SYSTEM CONTROL

TOR DRIVE), CAPSTAN MOTOR, REEL MOTOR SCHEMATIC DIAGRAM

20 21 22 23 24 25 26 27 28 29 30 31 32 33 34 35

A B C D E F G H I J

no mark : REC mode
( ) : PB mode
< > : CUE mode
[ ] : FF/REW mode
{{ }} : LOADING/THREADING mode
<< >> : EJECT mode
[[ ]] : REV mode

PT-7 (1/2) BOARD

CAPSTAN MOTOR BOARD

REEL MOTOR BOARD

LM-8 BOARD

When indicating parts by reference number, please include the board name.

SS-28 (SERVO/SYSTEM CONTROL), FU-22 (FUNCTION SWITCH & IND), TR-14 (TRACKING CONTROL), RD-6 (ROTATION DETECTOR), RD-7 (ROTATION DETECTOR), LM-8 (NOISE FILTER), CS-3 (CASSETTE ON SWITCH), CS-4 (CASSETTE IN SWITCH

– Ref. No. SS-28 BOARD : 4000 series, FU-22 BOARD : 7300 series, TR-14 BOARD : 5700 series, RD-6 BOARD : 6700 series, RD-7 BOARD : 6800 series, LM-8 BOARD : 7100 series, CS-3, CS-4 BOARD : 6300 series, PT-7 BOARD : 7700 series, REEL MOTOR BOARD : 7500 series –

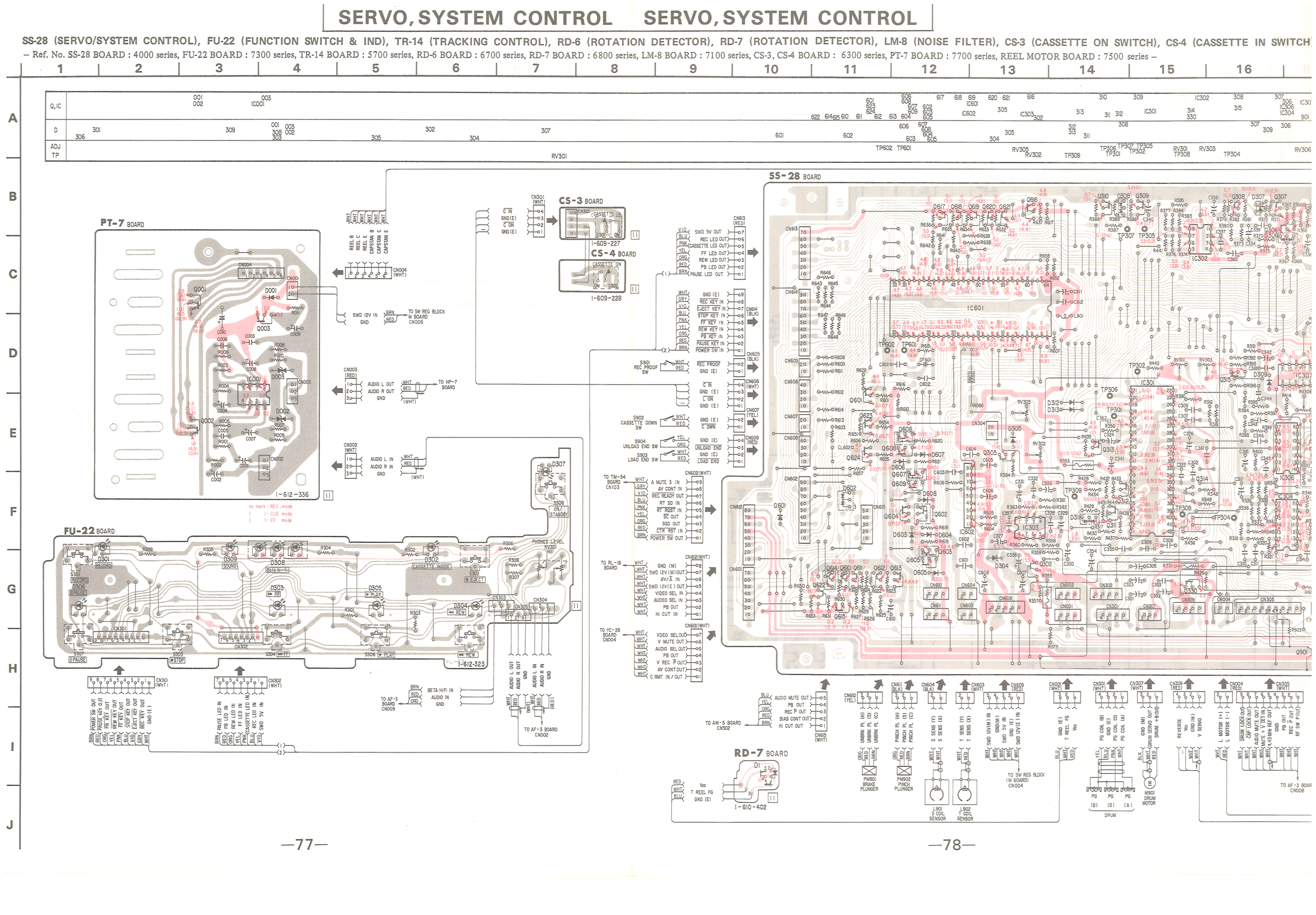

' (ROTATION DETECTOR), LM-8 (NOISE FILTER), CS-3 (CASSETTE ON SWITCH), CS-4 (CASSETTE IN SWITCH), PT-7 (REEL & CAPSTAN MOTOR DRIVE), CAPSTAN MOTOR, REEL MOTOR PRINTED WIRING BOARDS

es, CS-3, CS-4 BOARD : 6300 series, PT-7 BOARD : 7700 series, REEL MOTOR BOARD : 7500 series –

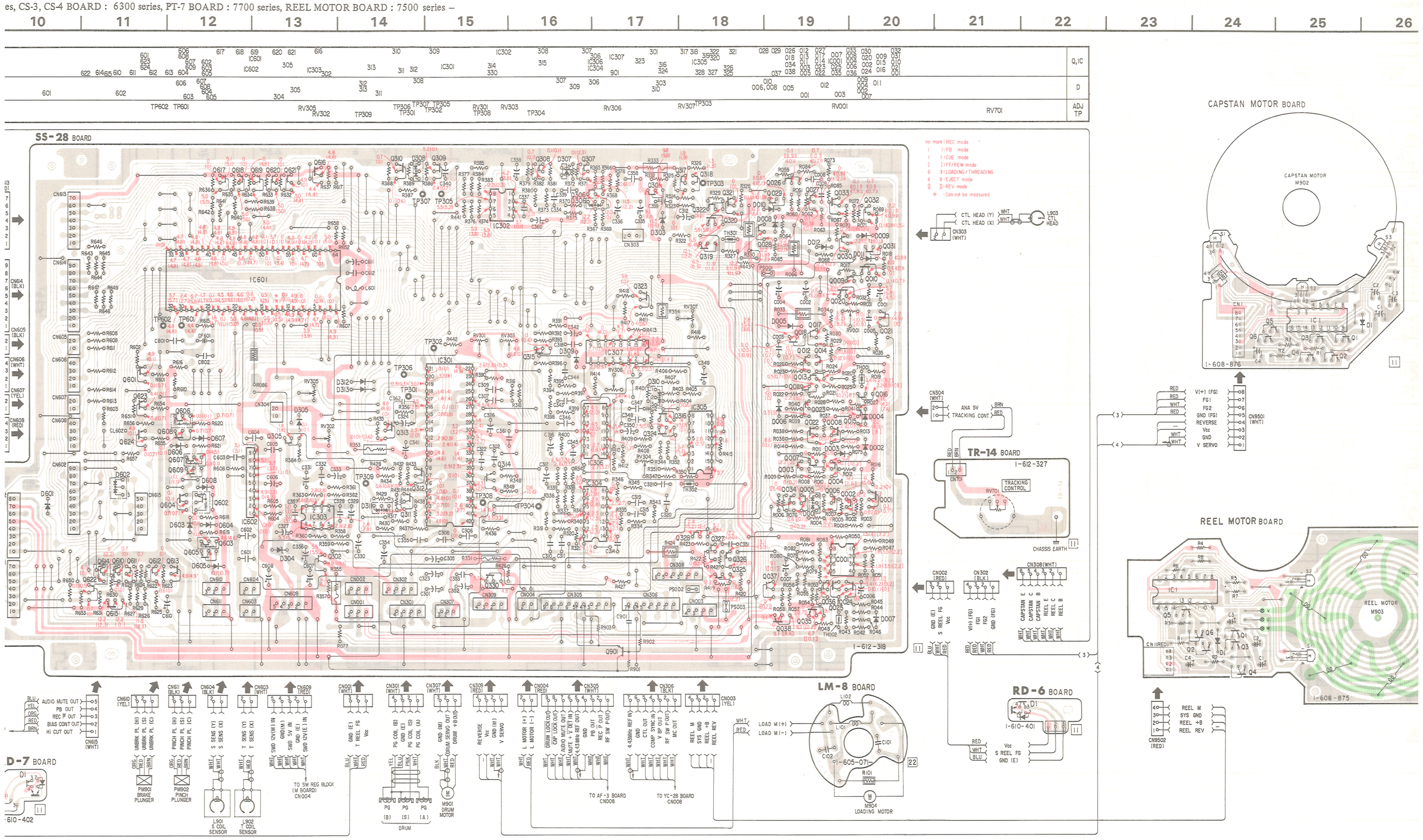

RIVE), CAPSTAN MOTOR, REEL MOTOR PRINTED WIRING BOARDS

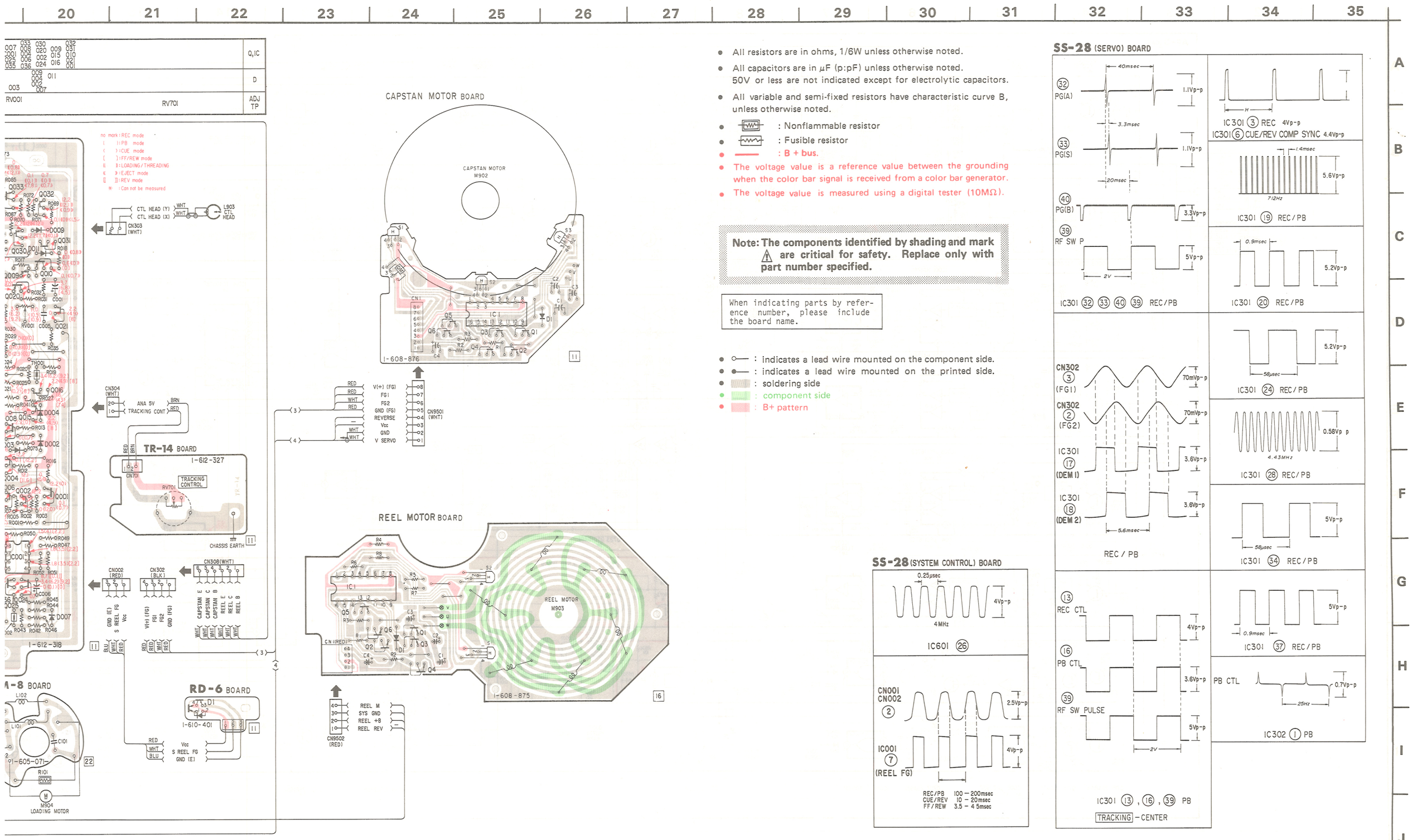

- All resistors are in ohms, 1/6W unless otherwise noted.
- All capacitors are in μF (p:pF) unless otherwise noted. 50V or less are not indicated except for electrolytic capacitors.
- All variable and semi-fixed resistors have characteristic curve B, unless otherwise noted.
- : Nonflammable resistor
- : Fusible resistor
- : B + bus.
- The voltage value is a reference value between the grounding when the color bar signal is received from a color bar generator.
- The voltage value is measured using a digital tester (10MΩ).

Note: The components identified by shading and mark ⚠ are critical for safety. Replace only with part number specified.

When indicating parts by reference number, please include the board name.

- ○— : indicates a lead wire mounted on the component side.
- ●— : indicates a lead wire mounted on the printed side.
- : soldering side
- : component side
- : B+ pattern

AUDIO AUDIO

4-4. AF-3 (AFM SIGNAL RECORD/PLAYBACK PROCESS), AM-5 (AUDIO SIGNAL REC/PB PROCESS), RL-18 (LEVEL METER DRIVE), FU-22 (HEADPHONE LEVEL), PT-7 (HEADPHONE AMP), HP-7 (HEADPHONE JACK), SW-31 (FUNCTION SWITCH),

– Ref. No. AF-3 BOARD : 3000 series, AM-5 BOARD : 2500 series, RL-18 BOARD : 5800 series, FU-22 BOARD : 7300 series, PT-7 BOARD : 7700 series, HP-7 BOARD : 5400 series, SW-31 BOARD : 6600 series, SV-12 BOARD : 6500 series –

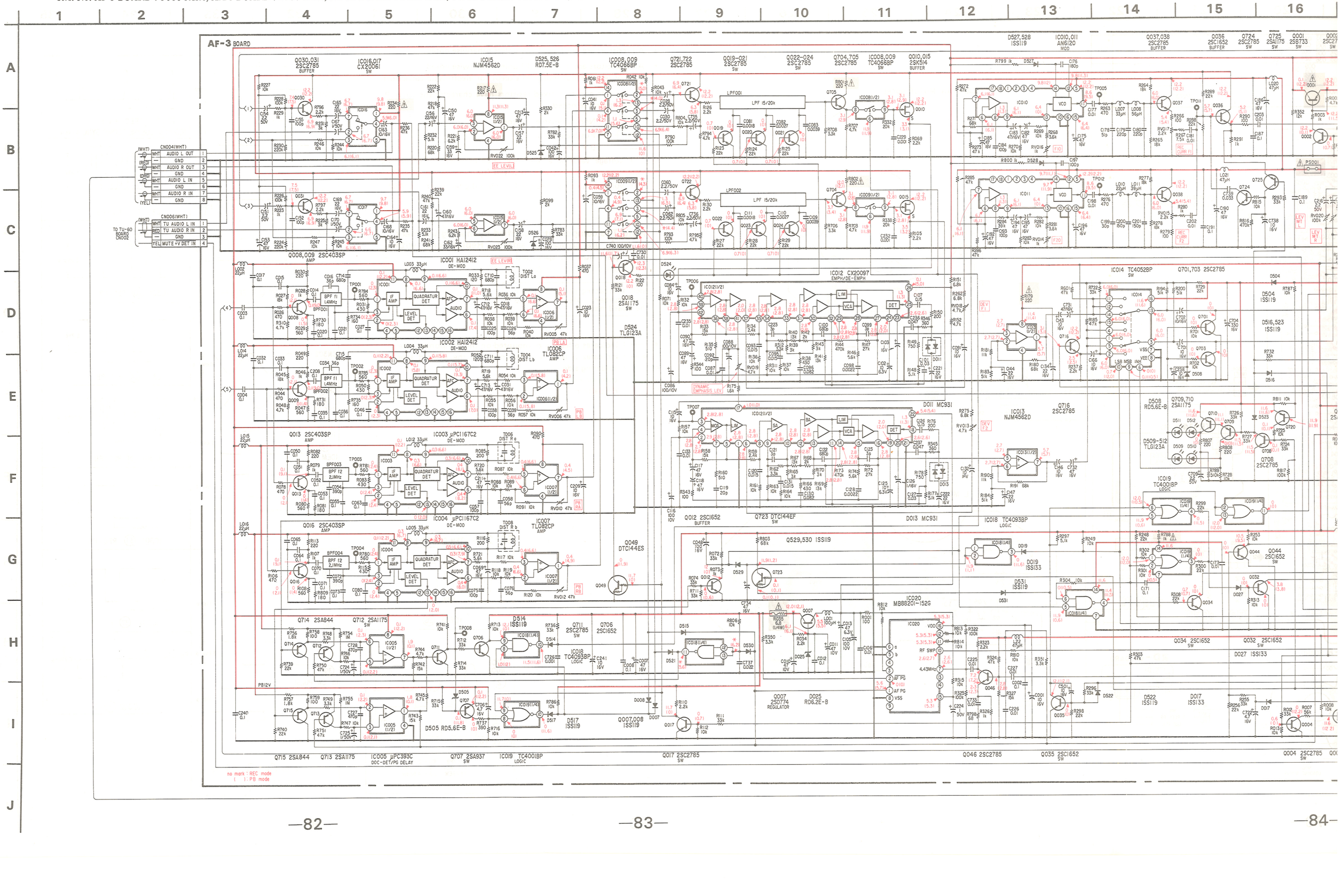

HONE LEVEL), PT-7 (HEADPHONE AMP), HP-7 (HEADPHONE JACK), SW-31 (FUNCTION SWITCH), SV-12 (AUDIO LEVEL), LEVEL METER UNIT SCHEMATIC DIAGRAM

W-31 BOARD : 6600 series, SV-12 BOARD : 6500 series –

11 12 13 14 15 16 17 18 19 20 21 22 23 24 25 26

AM-5 BOARD

RL-18 BOARD

FU-22 (1/2) BOARD

PT-7 (1/2) BOARD

SW-31 BOARD

SV-12 BOARD

LEVEL METER UNIT

UNIT SCHEMATIC DIAGRAM

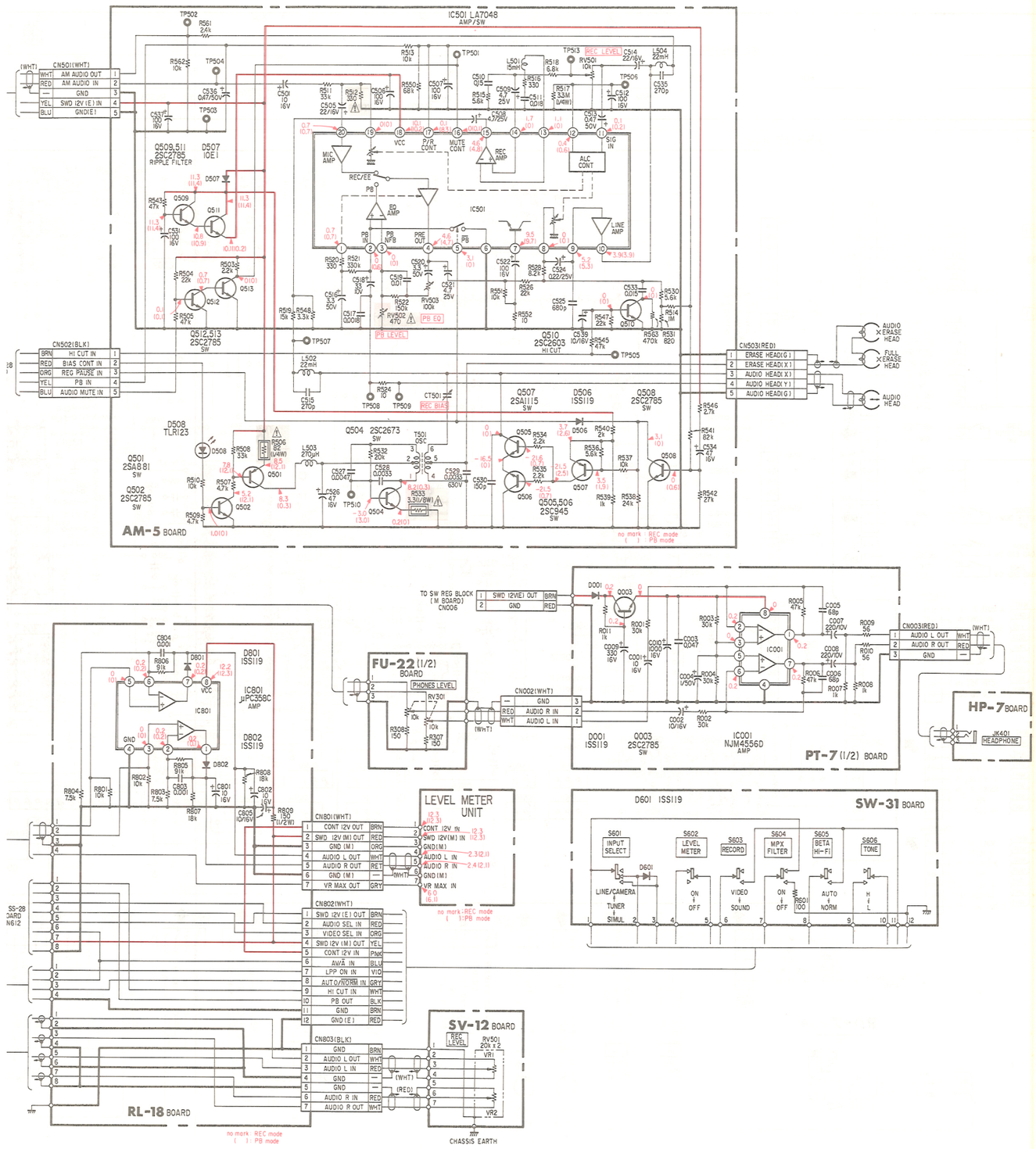

- All resistors are in ohms, 1/6W unless otherwise noted.
- All capacitors are in μF (p:pF) unless otherwise noted. 50V or less are not indicated except for electrolytic capacitors.
- All variable and semi-fixed resistors have characteristic curve B, unless otherwise noted.
- : Nonflammable resistor
- : Fusible resistor
- : B + bus.
- The voltage value is a reference value between the grounding when the color bar signal is received from a color bar generator.
- The voltage value is measured using a digital tester (10MΩ).

Note: The components identified by shading and mark ⚠ are critical for safety. Replace only with part number specified.

When indicating parts by reference number, please include the board name.

AM-5 BOARD

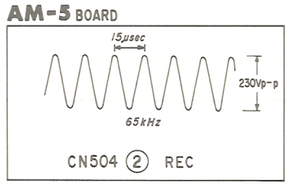

AF-3 (AFM SIGNAL RECORD/PLAYBACK PROCESS), AM-5 (AUDIO SIGNAL REC/PB PROCESS), RL-18 (LEVEL METER DRIVE), FU-22 (HEADPHONE LEVEL), PT-7 (HEADPHONE AMP), HP-7 (HEADPHONE JACK), SW-31 (FUNCTION SWITCH), SV-12 (AU

– Ref. No. AF-3 BOARD : 3000 series, AM-5 BOARD : 2500 series, RL-18 BOARD : 5800 series, FU-22 BOARD : 7300 series, PT-7 BOARD : 7700 series, HP-7 BOARD : 5400 series, SW-31 BOARD : 6600 series, SV-12 BOARD : 6500 series –

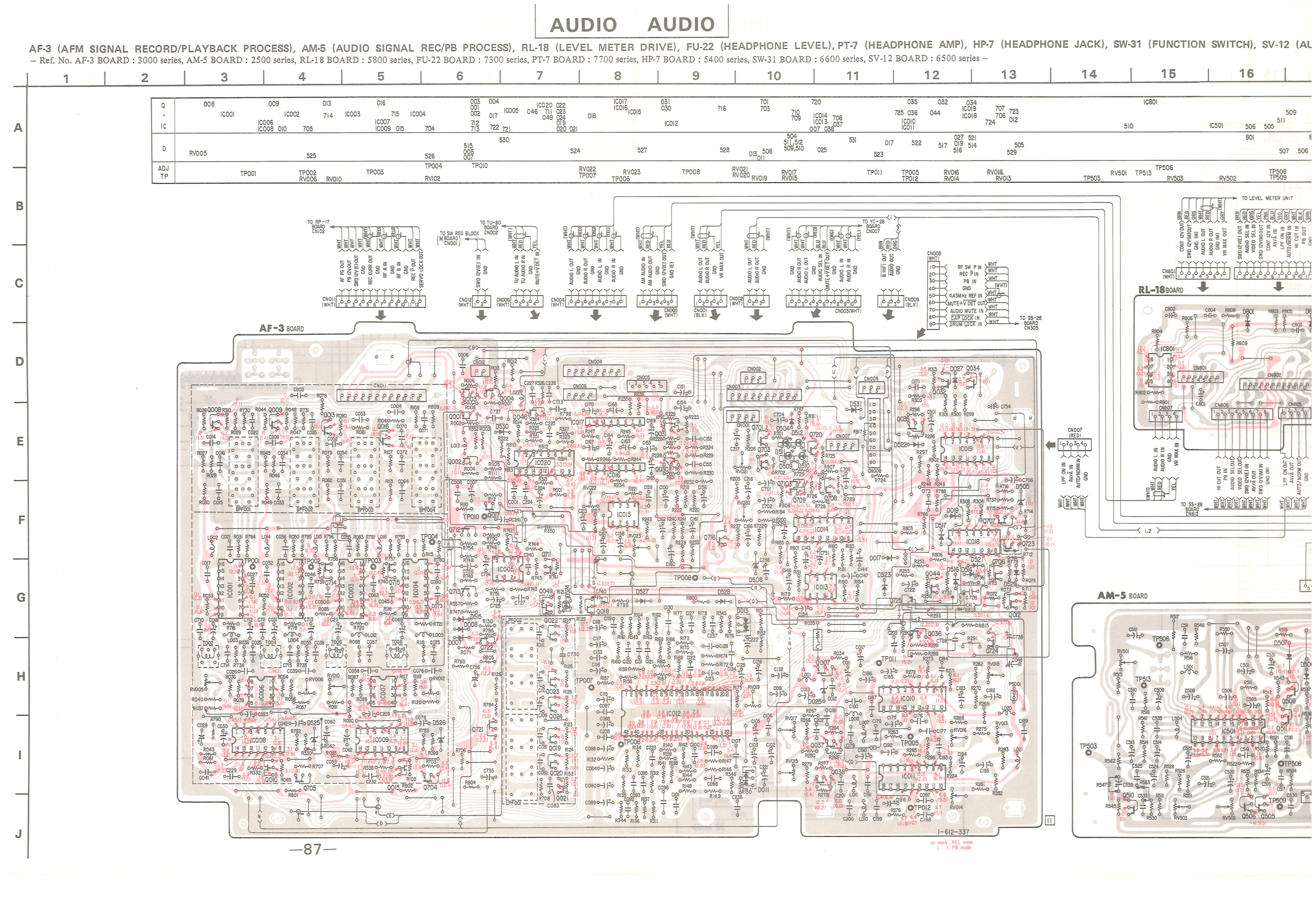

JNCTION SWITCH), SV-12 (AUDIO LEVEL), LEVEL METER UNIT. PRINTED WIRING BOARDS

15 16 17 18 19 20 21 22 23 24 25 26 27 28 29 30 31

A B C D E F G H I J

IC501 506 505 509 511 508 507 504 502 501 513 512 001 002 003 IC001 Q, IC

801 802 601 001 D

507 506 508 306 301 303 309 305 302 304 307

506 RV503 RV502 TP508 TP509 TP507 TP510 CT501 TP504 TP502 TP501 TP505 RV501 RV301 ADJ TP

TO LEVEL METER UNIT

CONT I2V OUT, SWD I2V(M)OUT, GND (M), AUDIO L OUT, AUDIO R OUT, GND (M), VR MAX OUT, GND (E)

SWD I2V(E) OUT, AUDIO SEL IN, VIDEO SEL IN, SWD I2V(M) OUT, CONT I2V IN, AV/Ā IN, LPF ON IN, AUTO/NORM IN, HI CUT IN, PB OUT, GND

CN801 (WHT) CN802 (WHT)

SW-31 BOARD

S601 INPUT SELECT

S602 LEVEL METER

S603 RECORD

S604 MPX FILTER

S605 BETA HI-FI

S606 TONE

D601

LINE/CAMERA—TUNER—SIMUL

ON—OFF

VIDEO—SOUND

AUTO—NORM

H—L

SWD I2V (E) IN, AUDIO SEL OUT, VIDEO SEL OUT, SWD I2V(M) IN, CONT I2V OUT, AV/Ā OUT, LPF ON OUT, AUTO/NORM OUT, HI CUT OUT, PB IN, GND (M), GND (E)

I-612-326

PT-7 BOARD

CN004 (WHT)

REEL B, REEL C, REEL E, CAPSTAN B, CAPSTAN C, CAPSTAN E

TO SS-28 BOARD CN308

Q001 Q002 Q003 D001 IC001

CN001 SWD I2V (E) OUT, GND — BRN, RED — TO SW REG BLOCK M BOARD CN006

CN003 (RED) AUDIO L OUT, AUDIO R OUT, GND

CN002 (WHT) AUDIO L IN, AUDIO R IN, GND

I-612-336

no mark : REC mode ( ) : CUE mode < > : FF mode

HP-7 BOARD

JK401 HEADPHONE

I-612-324

SV-12 BOARD

I-612-325

REC LEVEL RV501

CHASSIS EARTH

CN503 (RED) AUDIO HEAD(G), AUDIO HEAD(Y), AUDIO HEAD(X), ERASE HEAD(X), ERASE HEAD(G) — AUDIO HEAD, FULL ERASE HEAD, AUDIO ERASE HEAD

CN501 (WHT) AM AUDIO OUT, AM AUDIO IN, GND, SWD I2V(E) IN, GND (E)

CN502 (BLK) HI CUT IN, BIAS CONT IN, REC P IN, PB IN, AUDIO MUTE IN

TO SS-28 BOARD CN615

I-612-335

no mark : REC mode ( ) : PB mode

FU-22 BOARD

D301 RECORD, D306 PAUSE, D309 SOUND, D308 Beta Hi-Fi, D303 FF, D305 PB, D304 REW, D307, S308 ON/STANDBY

S301 RECORD, S307 PAUSE, S303 STOP, S304 FF, S306 PLAY, S305 REW, S302 EJECT

D302 CASSETTE INSIDE

PHONES LEVEL RV301

CN301 (WHT) — POWER SW OUT, PAUSE KEY OUT, PB KEY OUT, REW KEY OUT, FF KEY OUT, STOP KEY OUT, EJECT KEY OUT, REC KEY OUT, GND (E) — TO SS-28 BOARD CN614

CN302 (WHT) — PAUSE LED IN, PB LED IN, REW LED IN, FF LED IN, CASSETTE LED IN, REC LED IN, SWD 5V IN — TO SS-28 BOARD CN613

I-612-323

HI-FI IN, AUDIO L OUT, AUDIO R OUT, GND

I, 2

- : indicates a lead wire mounted on the component side.
- : indicates a lead wire mounted on the printed side.
- : soldering side
- : B+ pattern

When indicating parts by reference number, please include the board name.

4-5. TU-60 (VIF, SIF, AFT, AGC CHANNEL PRESET), MT-4 (TUNER), TM-54 (TIMER, REMOTE CONTROL, COUNTER), TM-55 (CHANNEL SWITCH, TIMER SWITCH), N (INFRARED AMP) SCHEMATIC DIAGRAM

– Ref. No. TU-60, MT-4 BOARD : 5000 series, TM-54 BOARD: 6100 series, TM-55 BOARD : 6200 series, N BOARD : 6400 series –

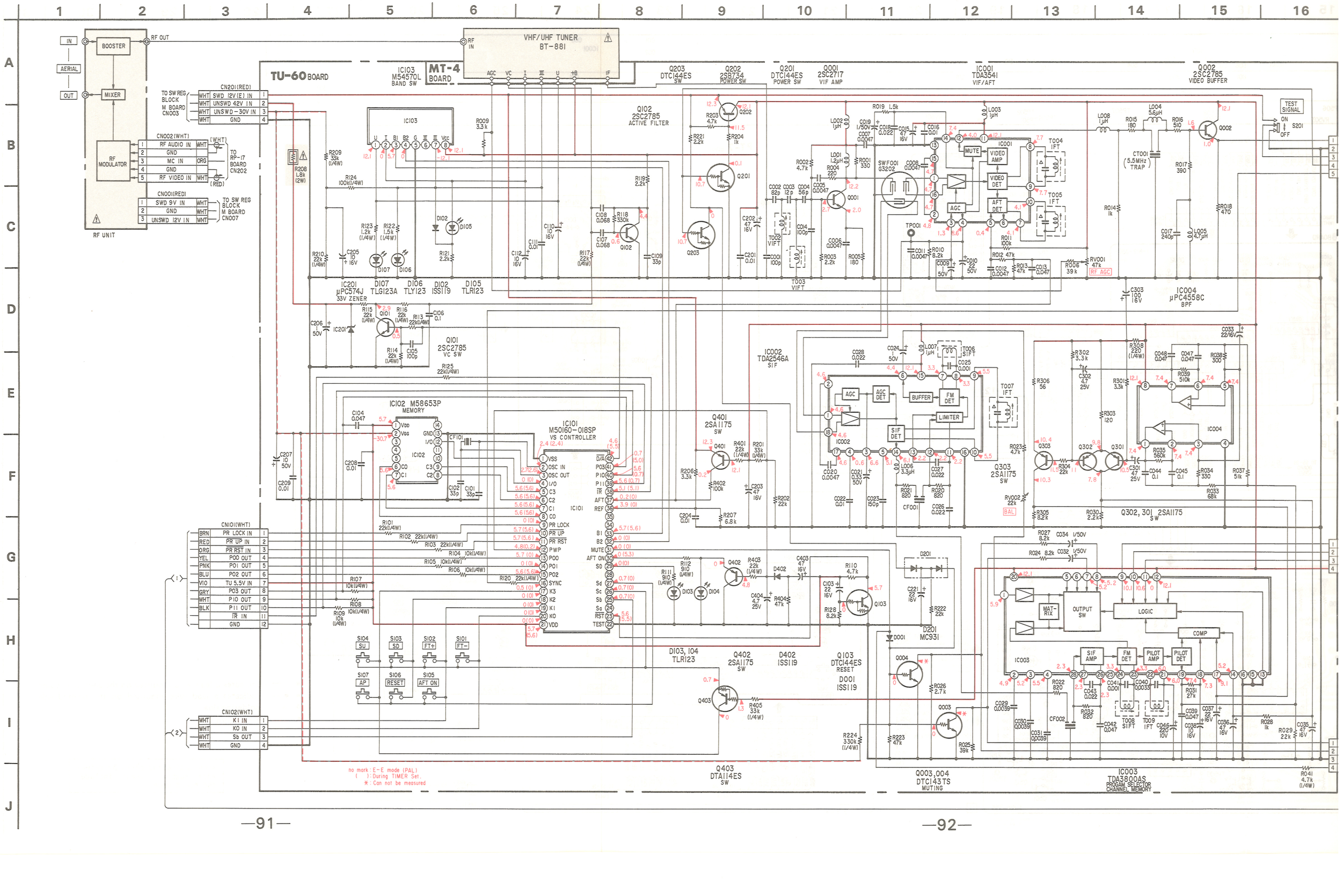

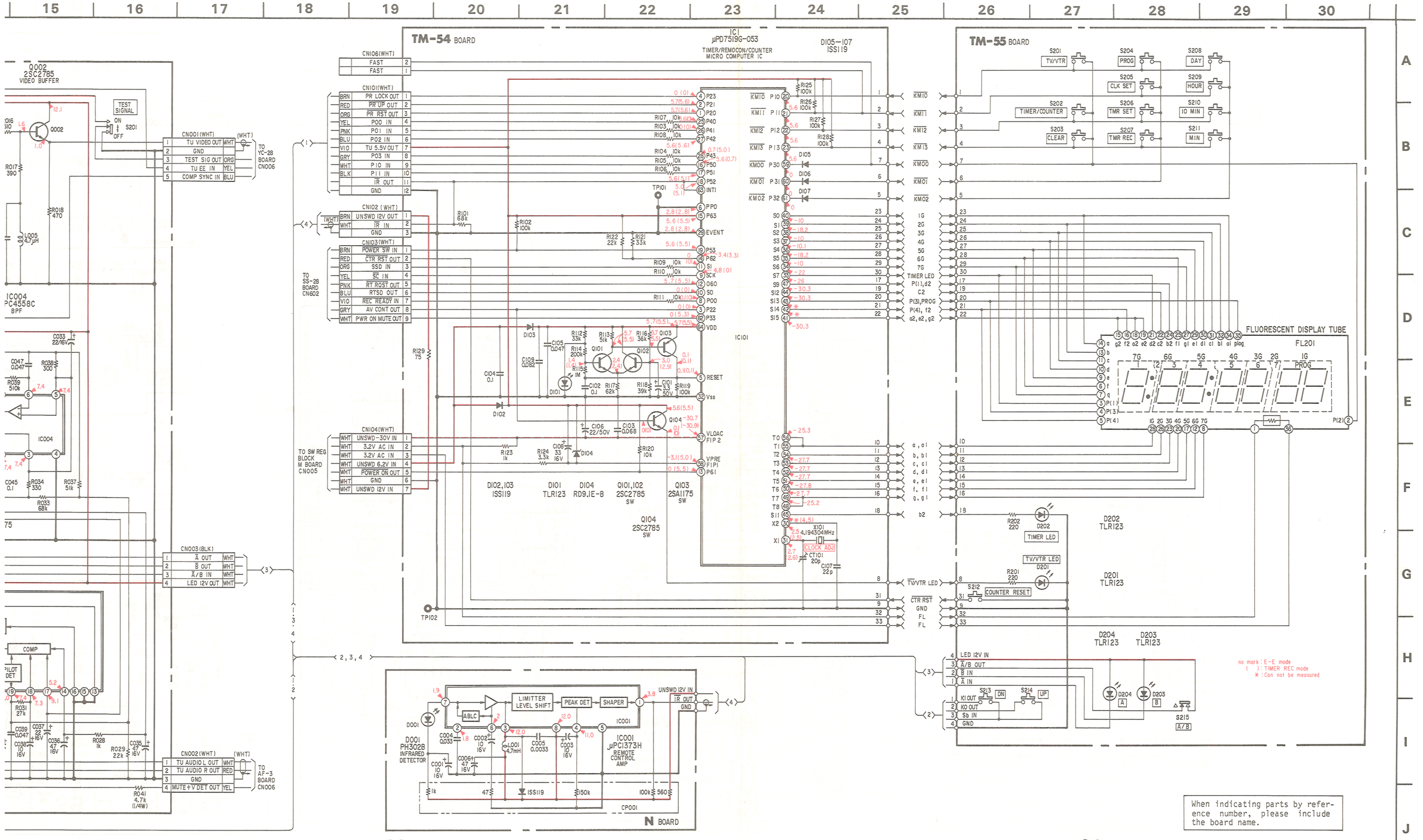

When indicating parts by reference number, please include the board name.

TU-60 (VIF, SIF, AFT, AGC CHANNEL PRESET), MT-4 (TUNER), TM-54 (TIMER, REMOTE CONTROL, COUNTER), TM-55 (CHANNEL SWITCH, TIMER SWITCH), N (INFRARED AMP) PRINTED WIRING BOARDS

– Ref. No. TU-60, MT-4 BOARD : 5000 series, TM-54 BOARD: 6100 series, TM-55 BOARD : 6200 series, N BOARD : 6400 series –

Q, IC	D	ADJ, TP
002		
003,004	201	
203	001	RV002
IC001, IC003		
201	103	402
202		
IC002		
IC101		RV001
IC102		TP001
303		
001		
IC004		
102		
402	104	
301,302		
IC201, 101	105,106,104	
401		
	102	
IC103		
	103	
403		

TU-60 BOARD

TM-54 BOARD

TM-55 BOARD

MT-4 BOARD

RF UNIT

TU001 UHF/VHF TUNER BT-881

UHF/VHF TUNER BT-881

I-612-333-

I-612-328-

I-612-329-

I-610-400-

no mark : E-E mode
( ) : Timer REC mode
* : Can not be measured

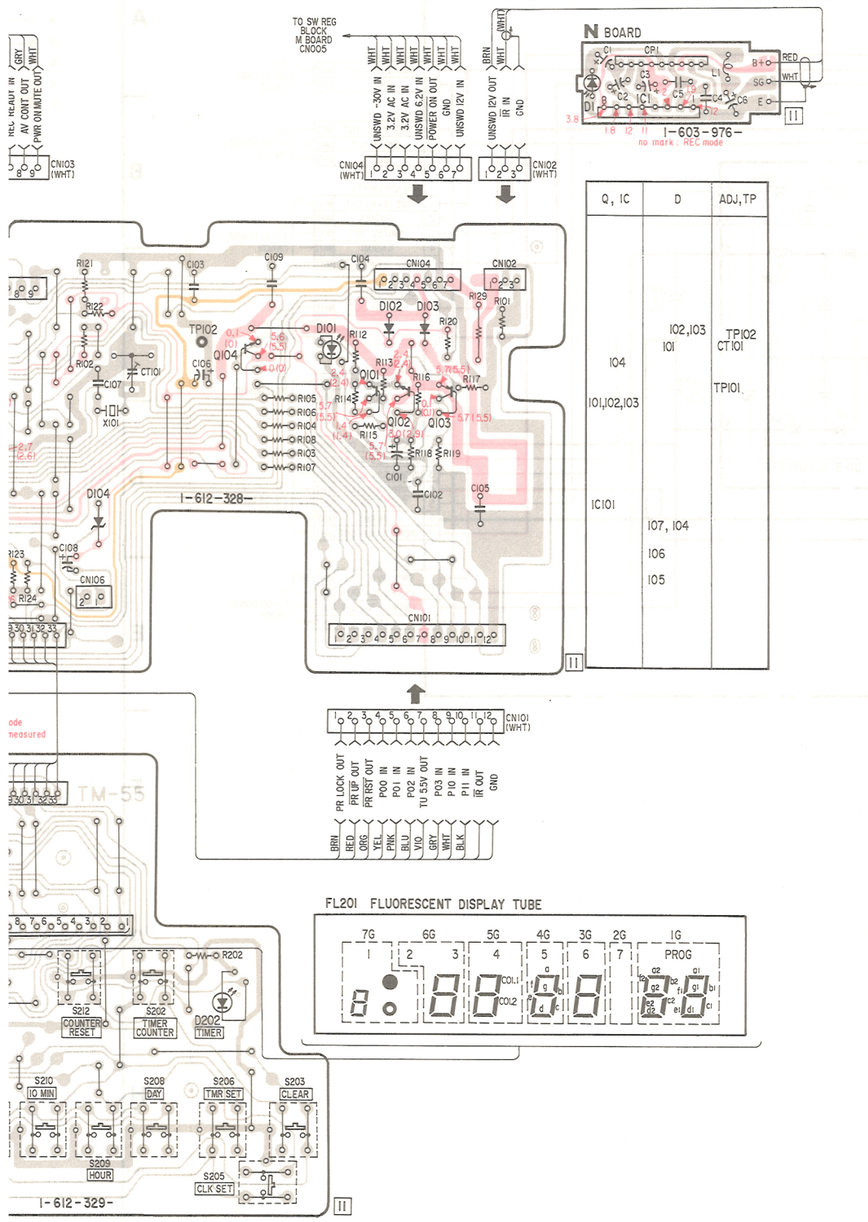

Q, IC	D	ADJ,TP
	102,103	TP102
104	101	CT101
		TP101
101,102,103		
IC101	107, 104	
	106	
	105	

- All resistors are in ohms, 1/6W unless otherwise noted.
- All capacitors are in μF (p:pF) unless otherwise noted. 50V or less are not indicated except for electrolytic capacitors.
- All variable and semi-fixed resistors have characteristic curve B, unless otherwise noted.
- : Nonflammable resistor
- : Fusible resistor
- : B + bus.
- : B- bus.
- The voltage value is a reference value between the grounding when the color bar signal is received from a color bar generator.
- The voltage value is measured using a digital tester (10MΩ).

Note: The components identified by shading and mark ⚠ are critical for safety. Replace only with part number specified.

When indicating parts by reference number, please include the board name.

- : indicates a lead wire mounted on the component side.
- : indicates a lead wire mounted on the printed side.
- : soldering side
- : B+ pattern
- : B- pattern

TM-54 BOARD

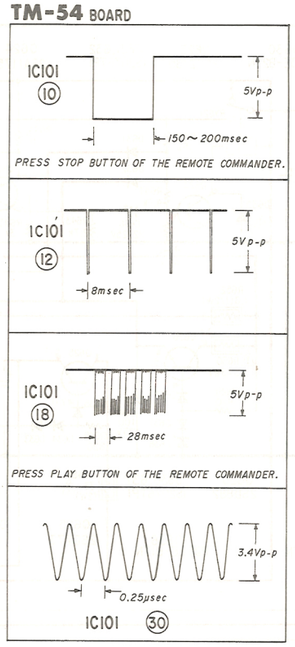

TU-60 BOARD

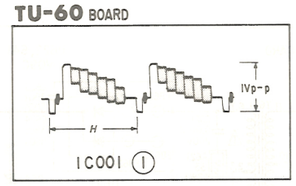

4-6. SR-19E (POWER SUPPLY) SCHEMATIC DIAGRAM

– Ref. No. 8000 series –

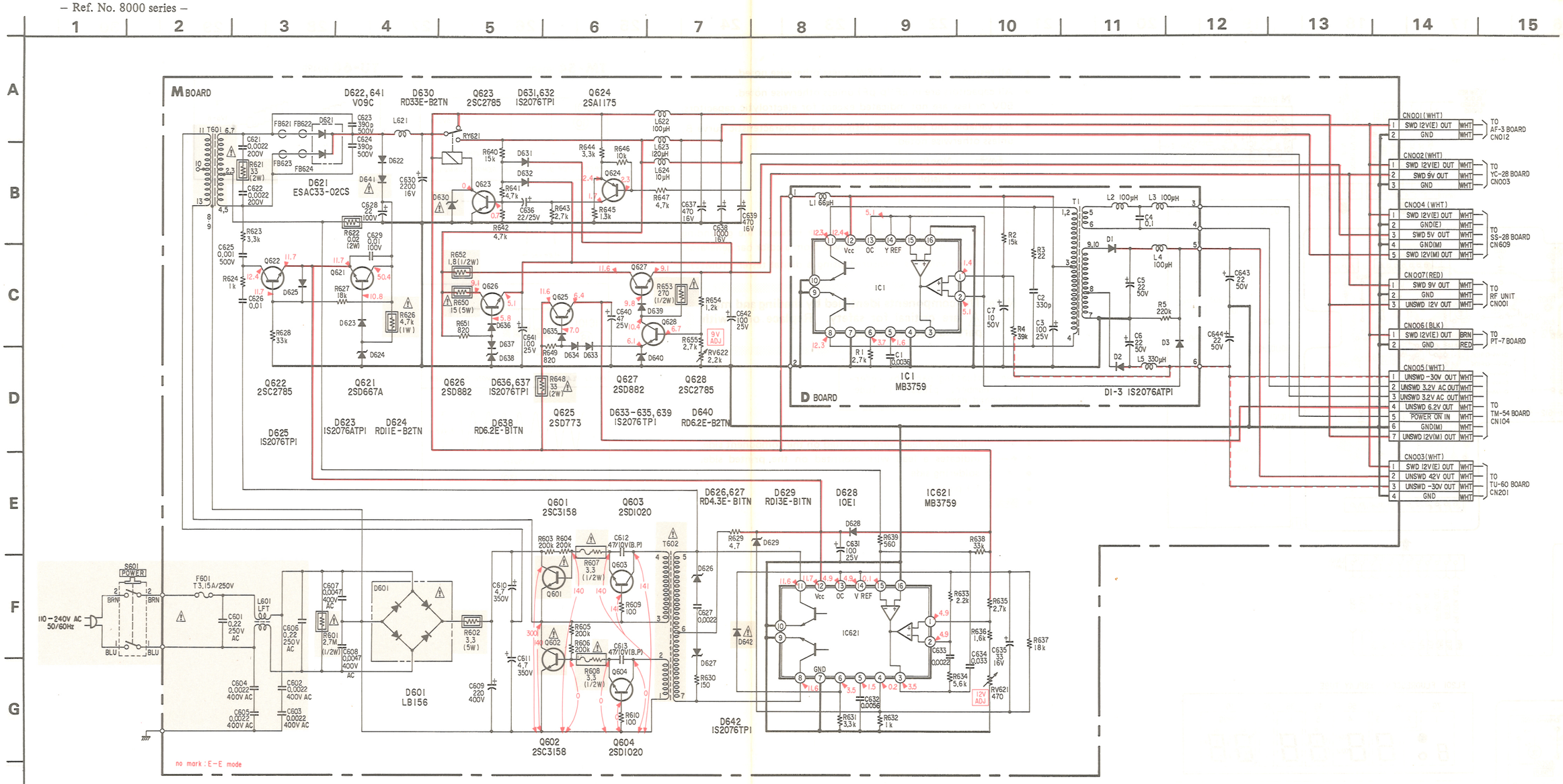

- All resistors are in ohms, 1/4W unless otherwise noted.
- All capacitors are in μF (p:pF) unless otherwise noted. 50V or less are not indicated except for electrolytic capacitors.
- All variable and semi-fixed resistors have characteristic curve B, unless otherwise noted.
- : Nonflammable resistor
- : Fusible resistor
- : B + bus.
- : B- bus.
- The voltage value is a reference value between the grounding when the color bar signal is received from a color bar generator.
- The voltage value is measured using a digital tester (10MΩ).

Note: The components identified by shading and mark ⚠ are critical for safety. Replace only with part number specified.

When indicating parts by reference number, please include the board name.

SR-19E (POWER SUPPLY) PRINTED WIRING BOARDS

– Ref. No. 8000 series –

- ● —○— : indicates a lead wire mounted on the component side.
- ● —●— : indicates a lead wire mounted on the printed side.
- ● : soldering side
- ● : B+ pattern
- ● : B- pattern

TO AF-3 BOARD CN012
TO YC-28 BOARD CN003
TO SS-28 BOARD CN609
TO RF UNIT CN001
TO PT-7 BOARD
TO TM-54 BOARD CN104
TO TU-60 BOARD CN201

D BOARD

IC	D
IC1	2,1
	3

M BOARD

S601 POWER
110–240V AC 50/60Hz
BLU
BRN

Q,IC	D	ADJ
627 626 602 601 628 625 603 623 624 622 604 621 IC621	622 621 639,631 636,637 638,632 635 641 634 640,633 624- 630 623 625 628 626 629 642 627 601	RV622 RV621

TO YC-28 BOARD CN003
CN002 (WHT)
CN006 (BLK)
CN007 (RED)
CN005 (WHT)
CN001 (WHT)
CN004 (WHT)
CN003 (WHT)
TO PT-7 BOARD
TO RF UNIT CN001
TO TM-54 BOARD CN104
TO AF-3 BOARD CN012
TO SS-28 BOARD CN609
TO TU-60 BOARD CN201

no mark:E-E mode

When indicating parts by reference number, please include the board name.

4-7. SEMICONDUCTORS

BA634

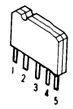

BA4558
HA17558
NJM4556D
NJM4558D
NJM4562D
μPC358C
μPC393C
μPC4558C

BA7007

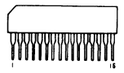

CX194B-0
CX194B-5
CX10021
CX20097
M50160-018SP

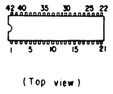

CX866A
CX20045

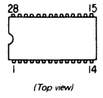

CX894
LA7205

CX7926
CX20061
M54570L
μPC1373H

CX10023

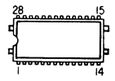

CX20043

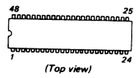

HA12412
MB3759
MB84053B
MB88201-152G
TC4052BP
TC4053BP
TDA3541
μPC1167C2
μPD4053BC

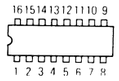

LA7048

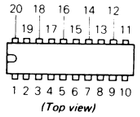

M58653P
MB3614
TC4001BP
TC4066BP
TC4093BP
μPC324C

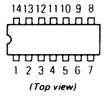

MB88421-141M

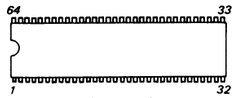

TA7060AP

TDA2546A

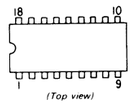

μPD7519G-053

μPC574J

2SA733-P
2SA844
2SA844-C

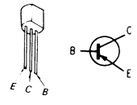

2SA772
2SA773
2SA773-13
2SB739
2SB740

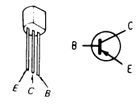

2SA874
2SA881

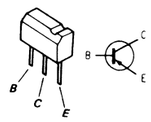

2SA1048
2SA1048-GR
2SA1115

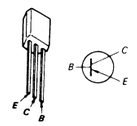

2SA1175

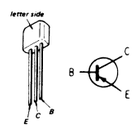

2SB733-4
2SB734

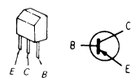

2SC403SP
2SC2458
2SC2603

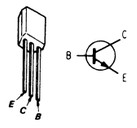

2SC945-P

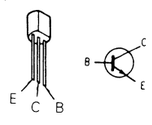

2SC1061
2SC2216
2SC2717
2SD313HP

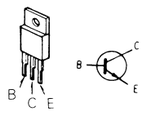

2SC1474
2SC1475
2SC1475-13
2SD667A
2SD788
2SD789

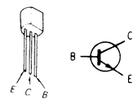

2SC1652
2SC2673

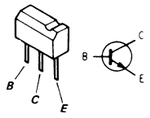

2SC2785
2SD1020

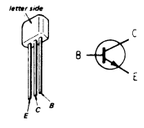

2SC3158

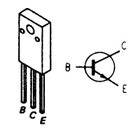

2SD773
2SD774

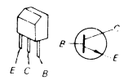

2SD882

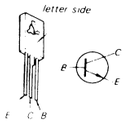

2SD1164

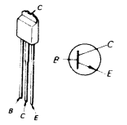

2SK108

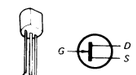

2SK152

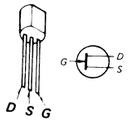

2SK514
2SK514-H

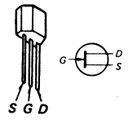

DTA114ES

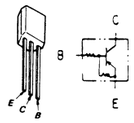

DTC124ES
DTC143TS
DTC144ES
DTC144WS

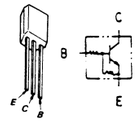

DTC144EF

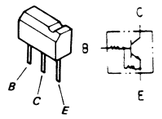

10E1
10E2

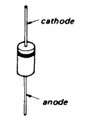

1S1555
1S2076
1S2076ATP1
1S2473
1SS106
HZT33-02
RD4.3E-B1TN
RD5.6E-B
RD6.2E-B
RD6.2E-B1TN
RD6.2E-B2TN
RD7.5E-B
RD9.1E-B
RD10E-B1
RD10E-B2
RD11E-B2TN
RD13E-B1TN
RD33E-B2TN

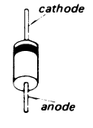

1SS119
1SS133
1SS148

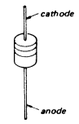

ESAC33-02CS

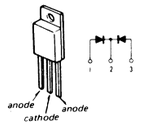

LB-156

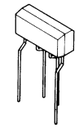

LT-9230N

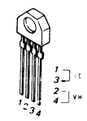

MC911

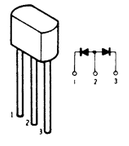

MC921

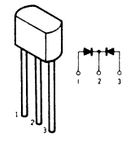

MC931

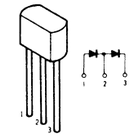

GP-2S02A

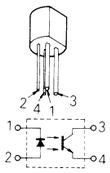

PH302B

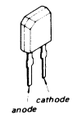

V09C

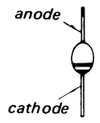

TLG123A
TLO123
TLR123
TLR124
TLY123

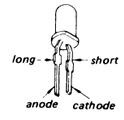

4-8. UHF AND VHF TUNER SCHEMATIC DIAGRAM
– BT-881 tuner –

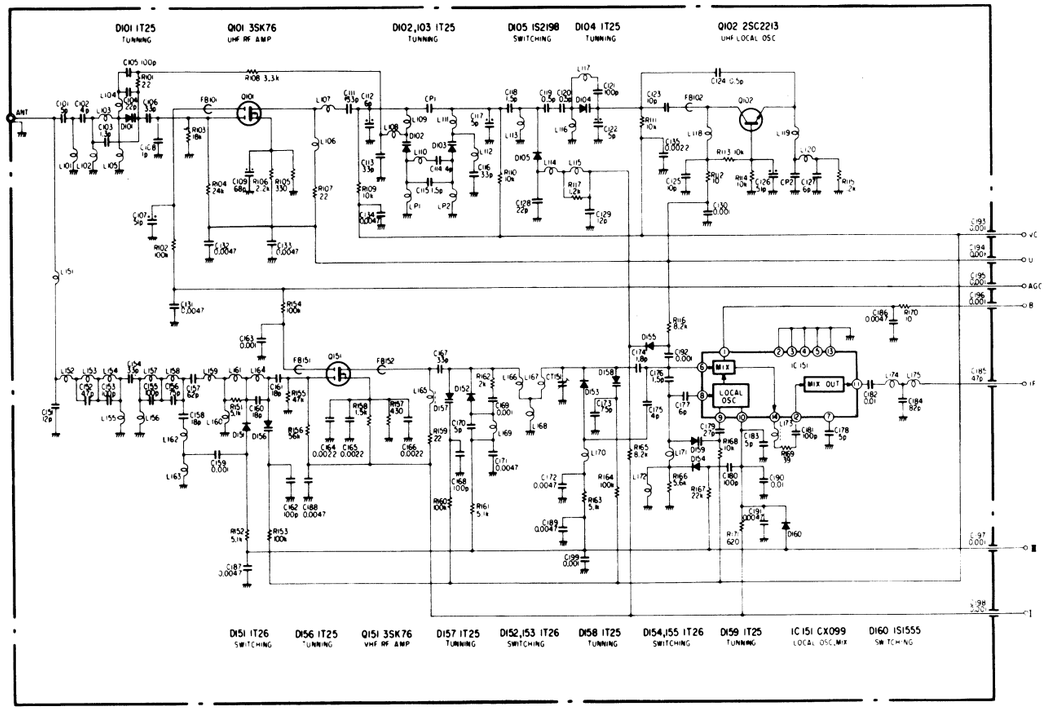

Note: Tuner reference numbers are not included in the Electrical Parts List.

SECTION 5
EXPLODED VIEWS

NOTE:
- Items with no part number and no description are not stocked because they are seldom required for routine service.
- The construction parts of an assembled part are indicated with a collation number in the remark column.
- Items marked " ♦ " are not stocked since they are seldom required for routine service. Some delay should be anticipated when ordering these items.

The components identified by shading and mark ⚠ are critical for safety. Replace only with part number specified.

5-1. FRONT PANEL AND CABINET ASSEMBLY

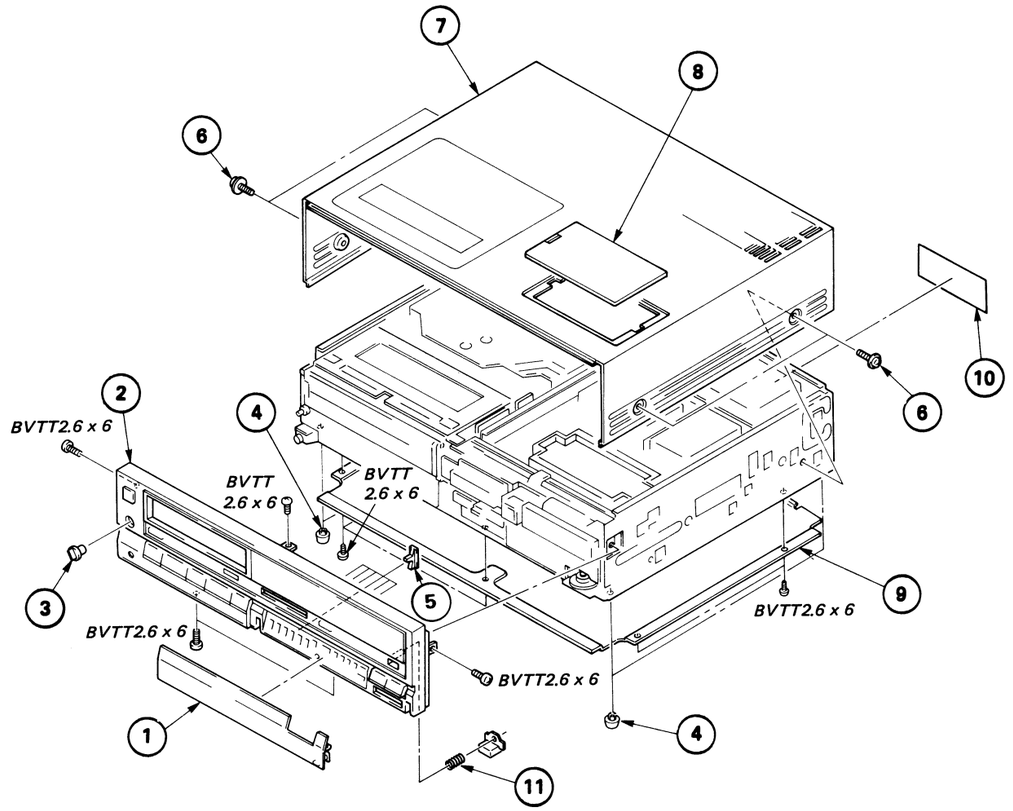

No.	Part No.	Description	Remark
1	X-3684-004-1	DOOR ASSY, FRONT	
2	X-3684-007-1	PANEL ASSY, FRONT	5,11
3	3-684-013-01	KNOB, CONTROL	
4	3-670-155-11	LEG	
5	3-684-035-01	BUTTON, SLIDE	
6	3-703-354-01	SCREW (OS), CASE, CLAW	
7	X-3684-006-3	CASE ASSY, UPPER	
8	3-681-218-41	DOOR, PRESET	
9	♦:3-684-056-02	PLATE, BOTTOM	
10	♦:3-684-057-01	LABEL, MODEL NUMBER	
11	4-864-435-00	SPRING, COMPRESSION	

5-2. POWER ASSEMBLY

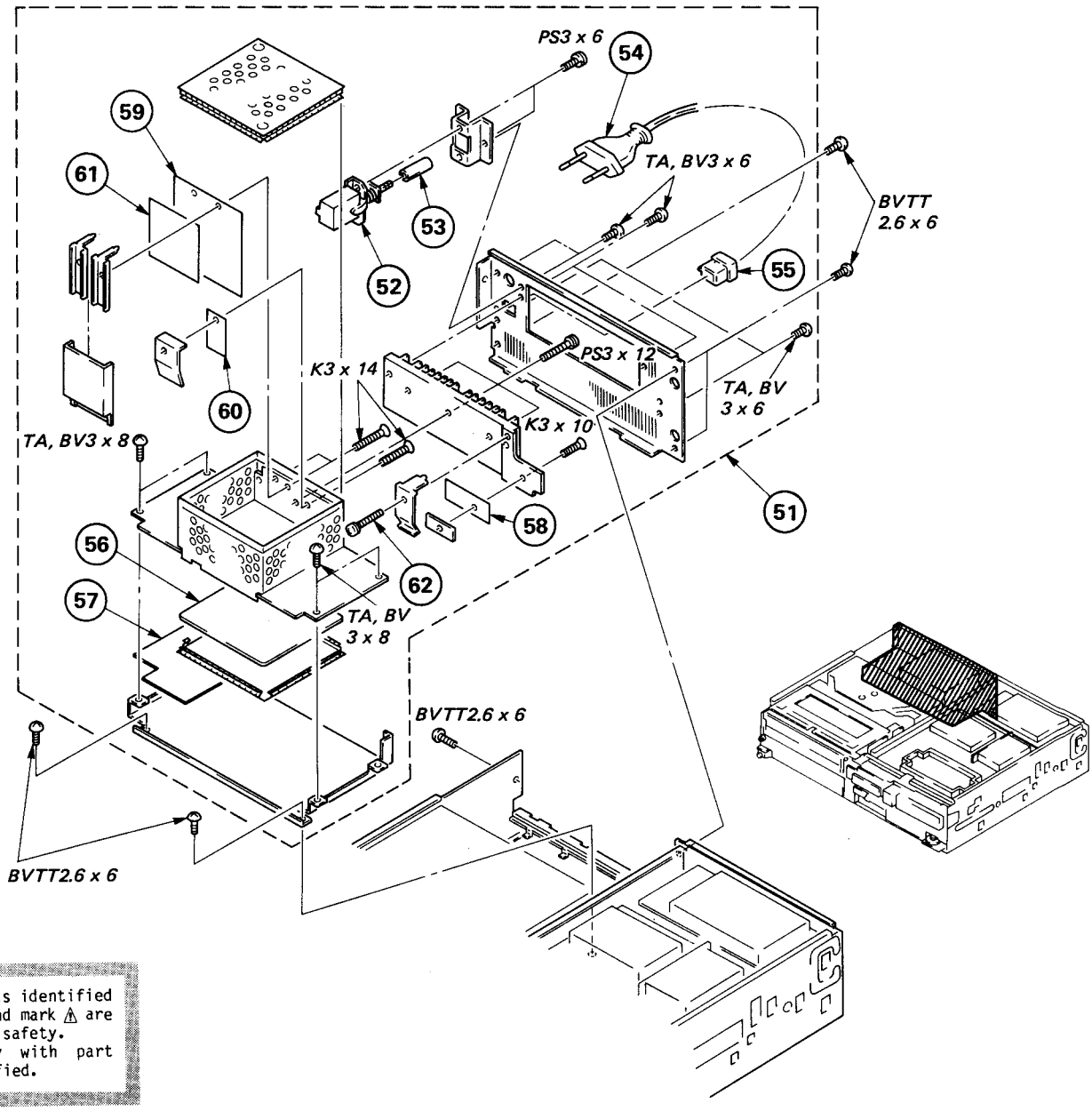

The components identified by shading and mark ⚠ are critical for safety. Replace only with part number specified.

No.	Part No.	Description	Remark
51	⚠1-413-171-11	SWITCHING REGULATOR (SR-19E)	52-62
52	⚠1-552-903-12	PUSH SWITCH	S601
53	4-334-115-01	CLOCK-D-KNOB	
54	⚠1-534-817-31	POWER CORD	
55	⚠3-703-244-02	CODE-STOPPER	
56	⚠2-430-374-01	SHEET A, INSULATING	
57	⚠2-430-375-01	SHEET B, INSULATING	
58	2-430-383-01	RUBBER, INSULATING	
59	⚠2-430-342-01	RUBBER, INSULATING	
60	2-430-269-01	RUBBER, INSULATING	
61	2-430-209-01	RUBBER, INSULATING	
62	2-434-060-01	+M3x18	

5-3. TIMER ASSEMBLY

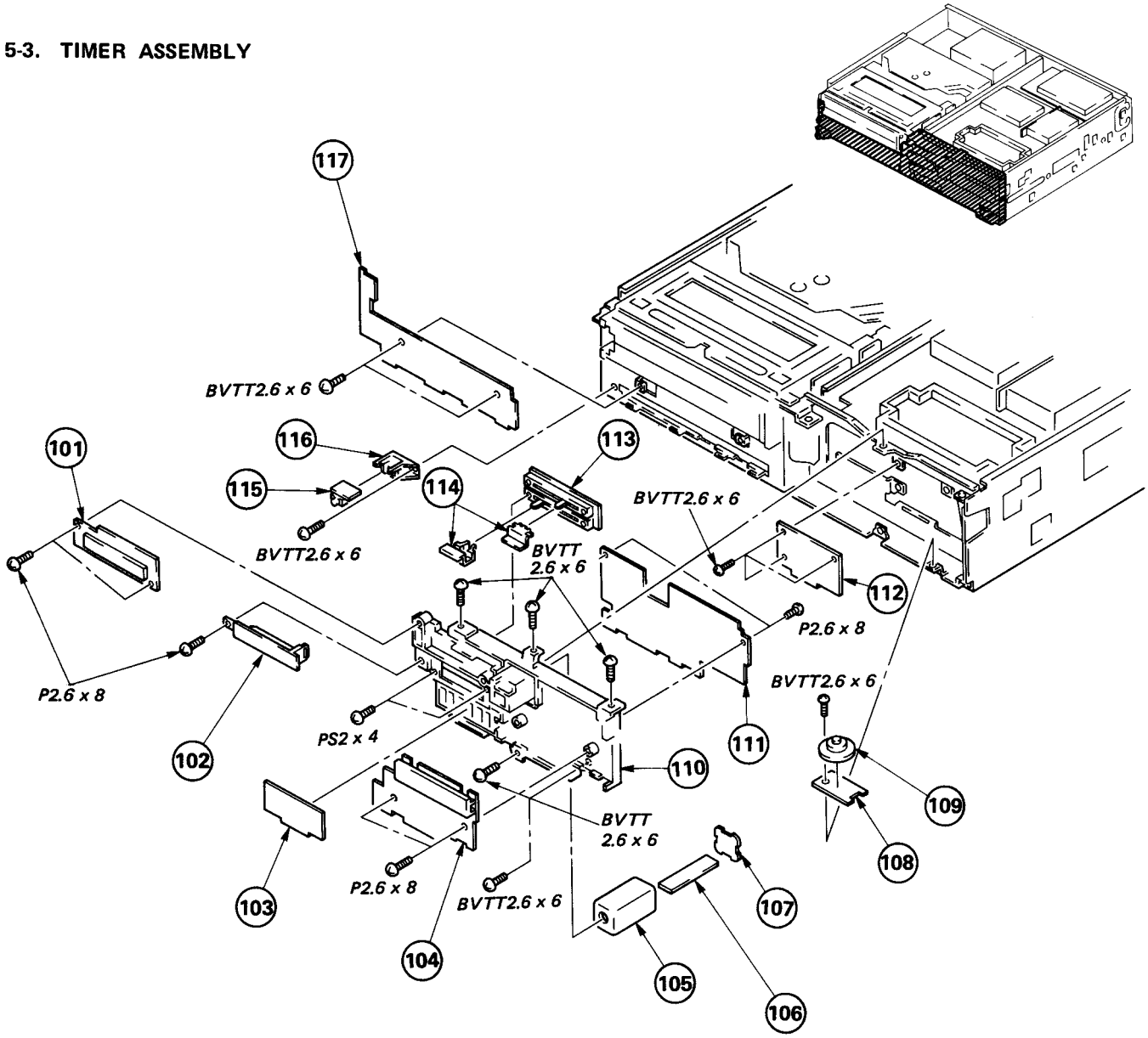

No.	Part No.	Description	Remark
101	1-520-470-11	METER UNIT, LEVEL	
102	3-684-046-01	SCALE, DIAL	
103	♦:1-612-326-11	PC BOARD, SW-31	
104	♦:A-6728-996-A	MOUNTED PCB, TM-55	
105	♦:4-342-117-00	CASE, SHIELD (MAIN), R	
106	♦:1-606-794-00	PC BOARD, N	
107	♦:4-342-118-00	LID, SHIELD CASE, R	
108	♦:1-612-327-11	PC BOARD, TR-14	
109	3-684-012-01	KNOB, TRACK CONTROL	
110	♦:3-684-054-02	BRACKET, TM	
111	♦:A-6728-995-A	MOUNTED PCB, TM-54	
112	♦:1-612-330-11	PC BOARD, RL-18	
113	♦:1-612-325-11	PC BOARD, SV-12	
114	3-684-031-02	KNOB, REC SLIDE	
115	♦:1-612-324-11	PC BOARD, HP-7	
116	♦:3-684-029-03	HOLDER, HP	
117	♦:1-612-323-11	PC BOARD, FU-22	

5-4. TUNER ASSEMBLY

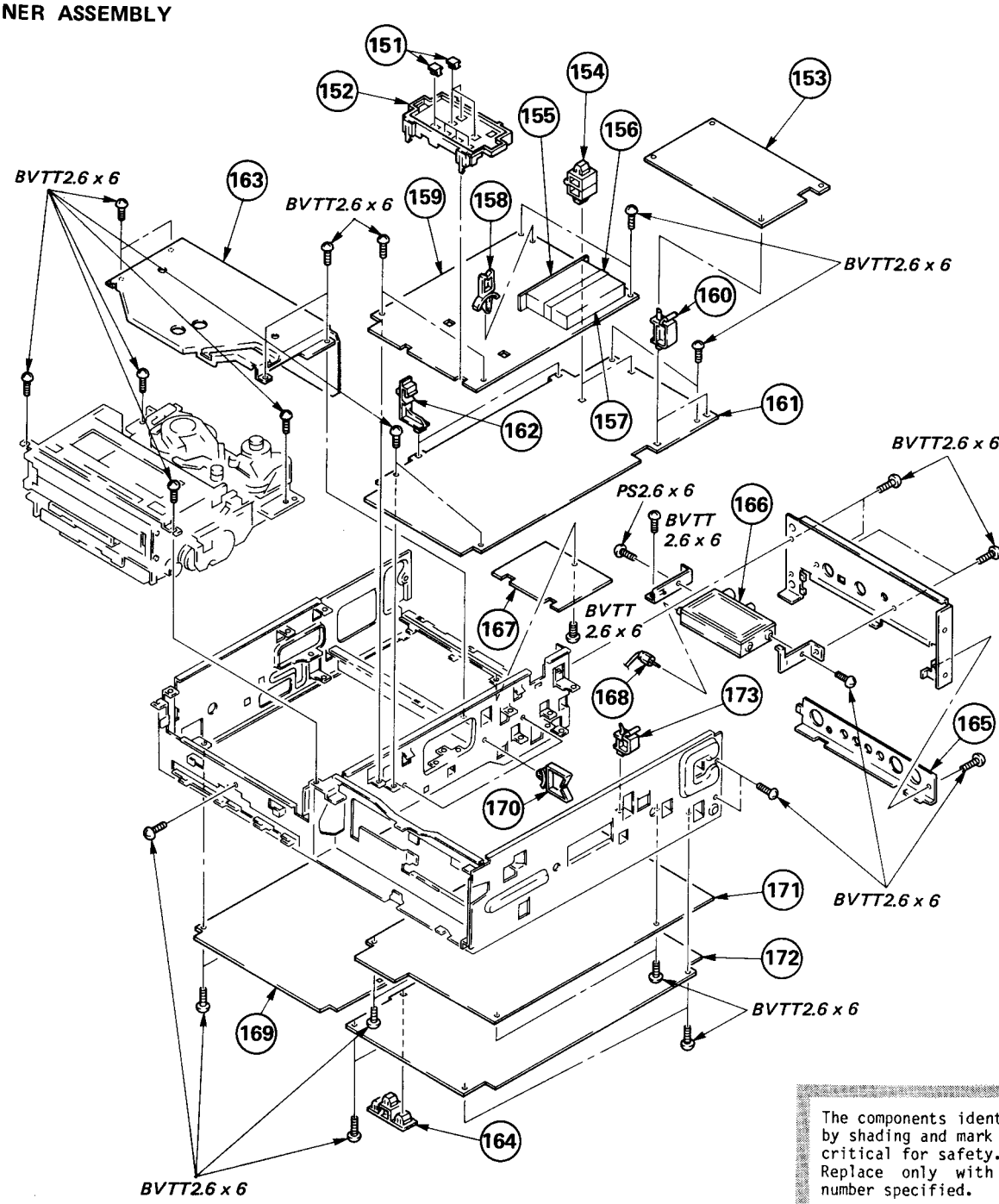

The components identified by shading and mark ⚠ are critical for safety. Replace only with part number specified.

No.	Part No.	Description	Remark
151	3-662-243-00	BUTTON, PRESET	
152	3-684-047-01	COVER, PRESET	
153	♣:A-6713-203-A	COMPLETE PCB, AM-5	
154	♣:3-682-080-00	HINGE (A), PCB	
155	♣:1-610-400-00	PC BOARD, MT-4	
156	♣:3-681-220-00	BAND, RETAINER, TUNER	
157	⚠1-463-350-00	TUNER (BT-881)	
158	♣:3-644-407-00	CLIP, AC WIRE E	
159	♣:A-6721-201-A	COMPLETE PCB, TU-60	155,156,157
160	♣:3-682-047-01	HOLDER (A), PC BOARD	
161	♣:A-6713-200-A	COMPLETE PCB, AF-3	
162	♣:3-682-612-00	CLIP (B), ANCHOR	
163	♣:X-3684-017-1	COVER ASSY, DRUM	
164	♣:3-681-184-00	HOLDER, PC BOARD	
165	♣:3-681-114-21	PANEL, CONNECTOR	
166	⚠1-464-270-12	BOOSTER, RF MODULATOR(RFU-808E)	
167	♣:A-6023-241-A	COMPLETE PCB, PT-7	
168	♣:1-556-934-00	CABLE, PIN	
169	♣:A-6711-528-A	COMPLETE PCB, RP-17	
170	♣:3-655-214-00	CLIP, CABLE	
171	♣:A-6715-224-A	COMPLETE PCB, SS-28	
172	♣:A-6711-527-A	COMPLETE PCB, YC-28	
173	♣:3-675-530-00	SUPPORT, PC	

5-5. FRONT LOADING ASSEMBLY

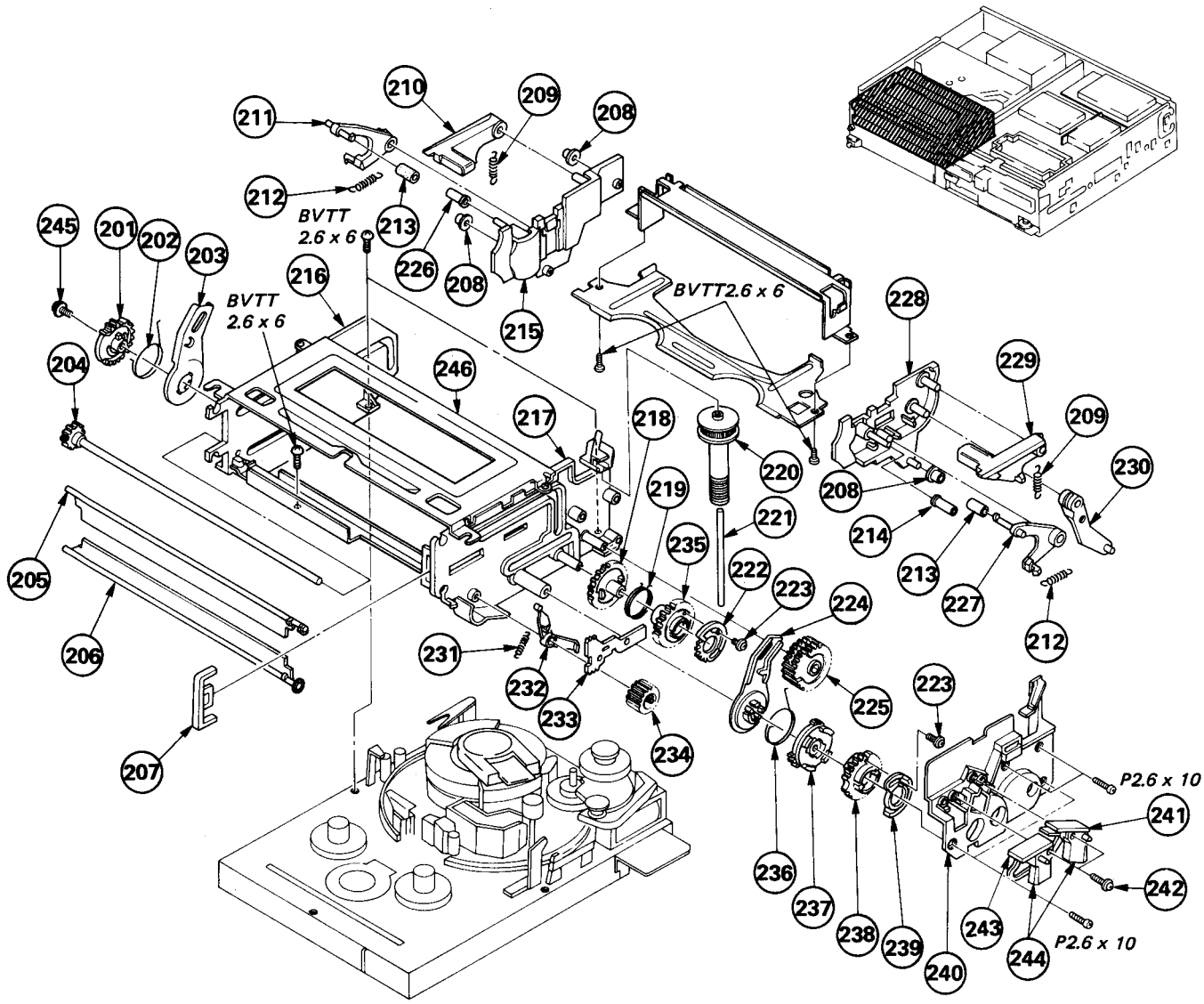

No.	Part No.	Description	Remark
201	3-679-226-00	GEAR (LEFT), ARM, DRIVING	
202	3-679-145-00	SPRING (LEFT)	
203	3-679-220-00	ARM (LEFT), DRIVING	
204	X-3679-105-0	SHAFT ASSY, GEAR, MIDWAY	
205	3-679-222-05	DOOR, UPPER	
206	3-679-223-05	DOOR, LOWER	
207	3-679-137-00	HOLDER, OUTER DOOR	
208	3-679-143-00	ROLLER	
209	3-679-188-00	SPRING, TENSION	
210	3-679-132-00	LEVER (LEFT), PREVENTION	
211	3-679-130-00	LEVER (LEFT), RETAINER, CASSETTE	
212	3-679-288-00	SPRING, TENSION	
213	3-679-135-00	RUBBER, RETAINER, CASSETTE	
214	3-679-128-00	ROLLER (RIGHT), DRIVING	
215	♣:X-3679-107-0	PLATE ASSY, SIDE, BASE LEFT	
216	♣:3-679-266-00	PLATE, SIDE, LEFT	
217	♣:3-679-265-00	PLATE, SIDE, RIGHT	
218	3-679-217-04	GEAR (A), LIMITER	
219	3-679-139-00	SPRING	
220	3-679-215-00	GEAR, WORM	
221	3-679-123-00	SHAFT, GEAR, WORM	
222	3-679-124-00	CAM (CASSETTE OFF)	
223	3-669-480-21	+ PTPWH 2	

No.	Part No.	Description	Remark
224	3-679-219-00	ARM (RIGHT), DRIVING	
225	3-679-216-00	WHEEL, WORM	
226	3-679-316-00	ROLLER (LEFT), DRIVING	
227	3-679-129-00	LEVER(RIGHT), RETAINER, CASSETTE	
228	♣:X-3679-106-0	PLATE ASSY, SIDE, BASE RIGHT	
229	3-679-131-00	LEVER (RIGHT), PREVENTION	
230	3-679-133-00	ARM, LID OPEN	
231	3-679-189-00	SPRING, TENSION	
232	3-679-134-00	ARM, SWITCHING, DOOR	
233	3-679-221-03	PLATE, RACK, SWITCHING, DOOR	
234	3-679-126-00	GEAR (RIGHT), MIDWAY	
235	3-679-218-00	GEAR (B), LIMITER	
236	3-679-144-00	SPRING (RIGHT)	
237	3-679-225-00	GEAR (RIGHT), ARM, DRIVING	
238	3-679-125-00	GEAR, DRIVING	
239	3-679-138-00	CAM (CASSETTE ON)	
240	♣:3-679-214-00	HOLDER, GEAR, WORM	
241	♣:1-609-227-11	PC BOARD, CS-3	
242	3-669-480-00	+ PTPWH 2	
243	♣:1-609-228-11	PC BOARD, CS-4	
244	1-554-241-00	SWITCH, LEVER	
245	3-683-421-01	SCREW (+ PTPWH)(2.6X8)	
246	♣:3-682-626-00	PLATE, TOP	

5-6. REEL TABLE ASSEMBLY

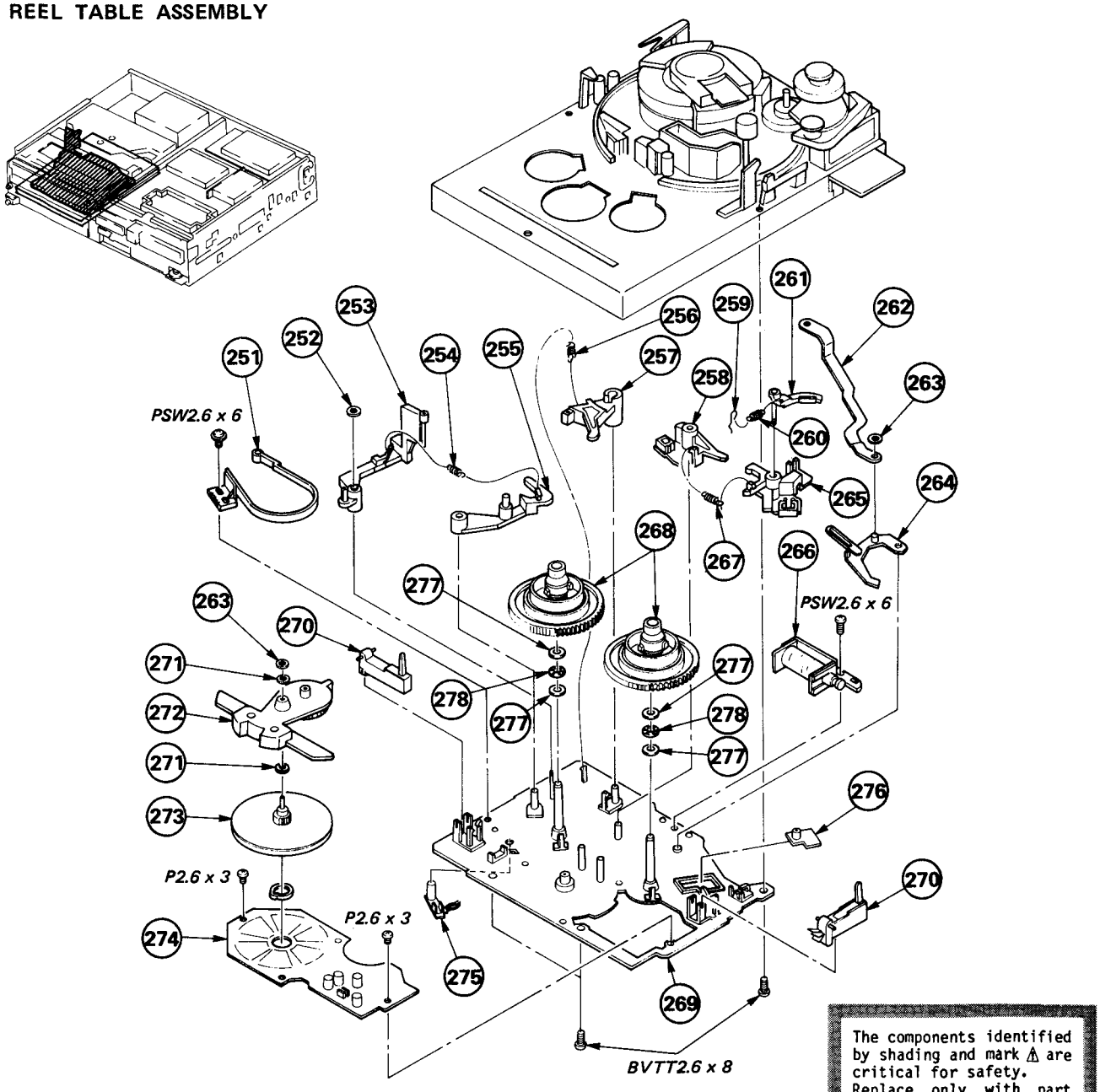

The components identified by shading and mark ⚠ are critical for safety. Replace only with part number specified.

No.	Part No.	Description	Remark
251	X-3679-120-0	BAND ASSY, TENSION REGULATOR	
252	3-669-465-00	WASHER (1.5), STOPPER	
253	X-3679-122-0	LEVER ASSY, TENSION REGULATOR	
254	3-679-156-00	SPRING, TENSION	
255	♣:3-679-230-00	LEVER, FUNCTION	
256	3-679-151-00	SPRING, TENSION	
257	♣:3-679-231-00	LEVER, BRAKE, SOFT	
258	X-3679-117-0	BRAKE ASSY, S	
259	♣:3-681-163-00	HOOK, SPRING, REWIND	
260	3-681-156-00	SPRING, TENSION	
261	♣:X-3681-105-0	ARM ASSY, REWIND BRAKE	
262	♣:3-679-168-00	JOINT, BRAKE, L	
263	3-669-595-00	WASHER (2), STOPPER	
264	X-3679-119-0	ARM ASSY, STOPPER, PENDULUM	
265	X-3679-118-0	BRAKE ASSY, T	
266	⚠1-454-348-31	SOLENOID, BRAKE PLUNGER	PM901
267	3-679-190-00	SPRING, TENSION	
268	X-3681-104-0	TABLE ASSY, S REEL	
269	♣:X-3679-130-0	CHASSIS ASSY, SUB	
270	1-554-374-00	SWITCH, LEVER	S901, S902
271	3-679-318-00	WASHER, PENDULUM ARM	
272	A-6759-074-K	ARM BLOCK ASSY, PENDULUM	
273	X-2622-201-0	ROTOR ASSY, R	
274	♣:A-4910-021-A	MOUNTED PCB, R STATOR	M903
275	♣:1-610-401-00	PC BOARD, RD-6	
276	♣:1-610-402-00	PC BOARD, RD-7	
277	3-646-573-00	WASHER	
278	3-646-572-00	BEARING	

5-7. CHASSIS ASSEMBLY (1)

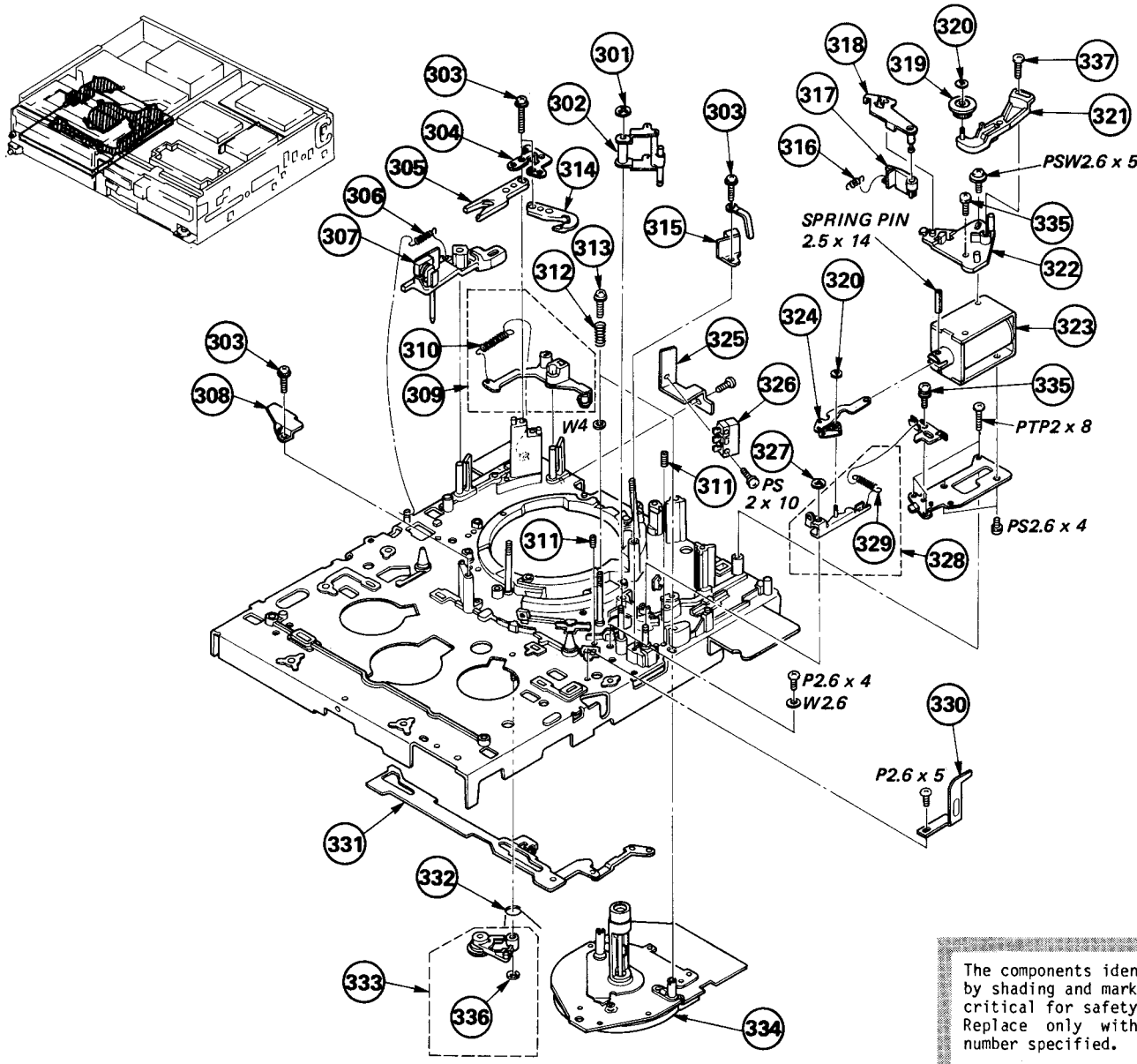

The components identified by shading and mark ⚠ are critical for safety. Replace only with part number specified.

No.	Part No.	Description	Remark
301	3-669-596-00	WASHER (2.3), STOPPER	
302	♣:X-3679-108-0	ARM ASSY, PRESS, PINCH	
303	3-669-480-11	+ PTPWH 2	
304	♣:3-672-540-00	PLATE, GROUND, TAPE GUIDE	
305	♣:3-669-618-00	PLATE (2), ADJUST	
306	3-679-164-00	SPRING, TENSION	
307	1-464-286-00	SENSOR, S COIL	L901
308	3-669-476-04	PLATE, GUIDE	
309	X-3679-149-0	ARM (B) ASSY, LOCK	310
310	3-679-323-00	SPRING, TENSION	
311	3-681-284-01	SCREW (-2.6X5) (S)	
312	3-679-359-00	SPRING, COMPRESSION	
313	3-669-633-00	SCREW, + PW2	
314	♣:3-672-507-00	PLATE (3-1), ADJUSTMENT	
315	1-464-250-00	SENSOR, T COIL	L902
316	3-508-108-XX	SPRING, TENSION	
317	♣:3-679-251-00	LIMITER, STOPPER	
318	♣:X-3679-123-0	ARM ASSY, STOPPER	
319	3-679-307-00	GEAR, TENSION	

No.	Part No.	Description	Remark
320	3-669-465-00	WASHER (1.5), STOPPER	
321	♣:X-3679-145-0	ARM ASSY, CAR, TENSION	
322	♣:3-679-117-00	CHASSIS, ARM, STOPPER	
323	⚠1-454-365-21	SOLENOID, PLUNGER (PINCH)	PM902
324	X-3679-152-0	ARM (B) ASSY, PINCH SOLENOID	
325	♣:3-672-542-00	BRACKET, SWITCH, LE	
326	1-553-539-00	SWITCH, MICRO (LOADING END)	S903
327	3-669-595-00	WASHER (2), STOPPER	
328	♣:X-3669-379-0	ARM (P) ASSY, PINCH LIMITER	329
329	3-515-170-00	SPRING, TENSION	
330	♣:3-679-163-00	PLATE, LID OPEN	
331	X-3681-106-0	LEVER ASSY, SLIDE	
332	3-681-154-00	SPRING, TORSION	
333	X-3681-107-0	ARM ASSY, REVIEW BRAKE	336
334	8-838-048-01	MOTOR, DC (BHF-1908A)	M902
335	3-669-607-00	+PSW (SMALL ROUND) 2.6	
336	3-701-436-11	WASHER, 1.6	
337	3-681-231-00	SCREW (+PW 2.6X8), TAPPING	

5-8. CHASSIS ASSEMBLY (2)

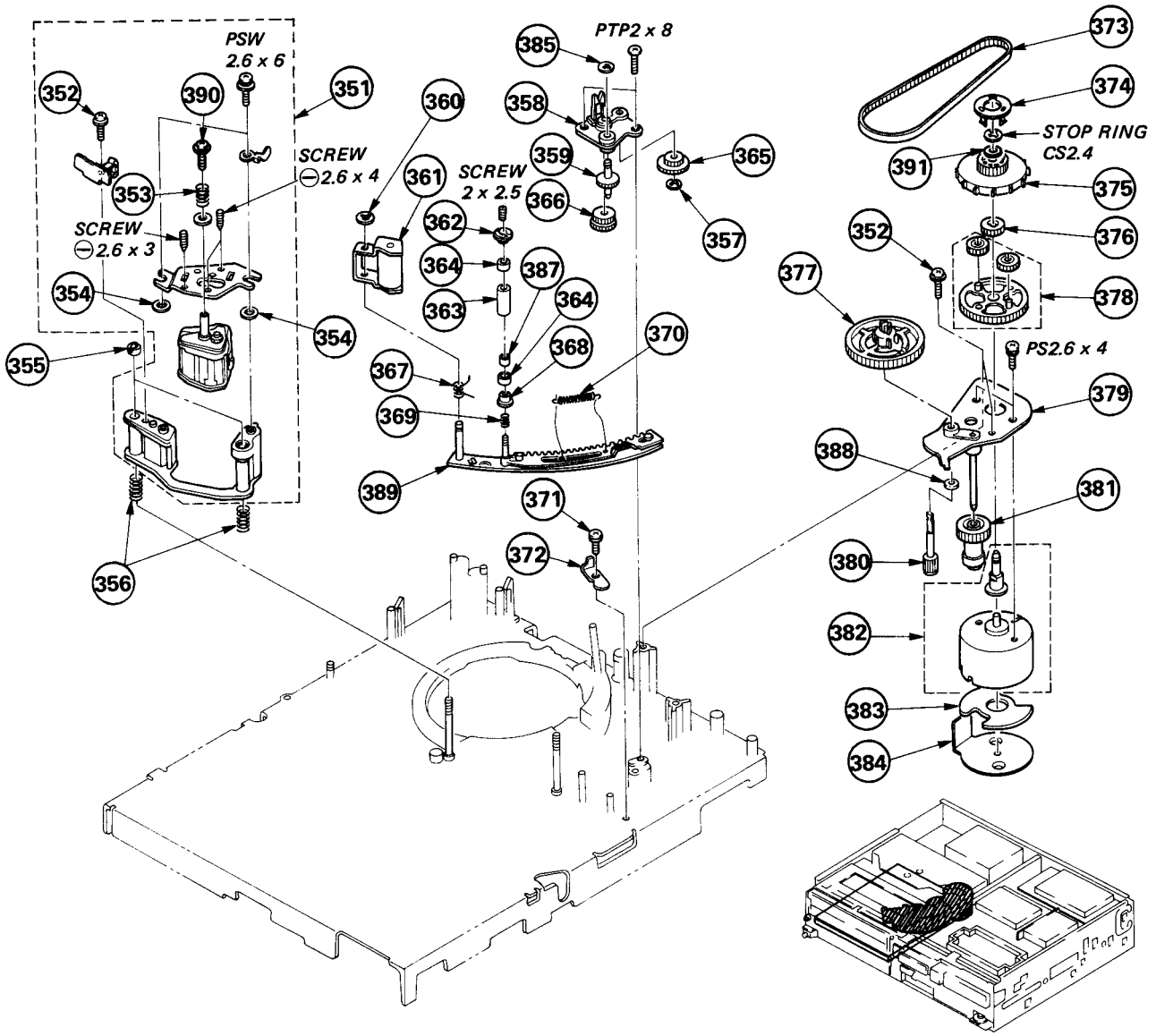

No.	Part No.	Description	Remark
351	A-6761-060-A	ACE ASSY	352,353,354,390
352	3-669-480-11	+ PTPWH 2	
353	♦:3-669-316-00	SPRING, COMPRESSION	
354	3-669-598-00	WASHER, CTL	
355	3-669-318-00	NUT, ADJUSTMENT, GUIDE	
356	3-669-317-00	SPRING, COMPRESSION	
357	3-669-465-00	WASHER (1.5), STOPPER	
358	X-3679-147-0	CHASSIS (B) ASSY, DRIVE GEAR	
359	X-3679-148-0	GEAR (F) ASSY (B)	
360	3-669-596-00	WASHER (2.3), STOPPER	
361	X-3679-264-1	ARM ASSY, PINCH ROLLER	
362	3-669-431-00	FLANGE (UPPER), GUIDE	
363	3-669-438-11	ROLLER (#9), GUIDE	
364	3-669-443-00	BEARING, BALL (NO FLANGE)	
365	3-669-337-00	GEAR (D)	
366	3-669-338-00	GEAR (E)	
367	3-683-441-01	SPRING	
368	3-669-432-00	FLANGE (LOWER), GUIDE	
369	3-669-452-00	SPRING, COMPRESSION	
370	3-549-014-00	SPRING, TENSION	
371	3-669-607-31	+PSW (SMALL ROUND) (2.6)	
372	♦:3-679-165-00	STOPPER, SLIDER	
373	3-679-119-00	BELT, SYNCHRO	
374	3-679-140-00	FLANGE, GEAR, INTERNAL	
375	3-679-101-00	GEAR, INTERNAL	
376	3-679-104-05	GEAR	
377	3-679-115-00	GEAR (LARGE), LOADING	
378	X-3679-111-0	CARRIER ASSY	
379	♦:X-3679-112-0	CHASSIS ASSY, GEAR, PLANET	
380	3-679-114-00	GEAR (SMALL), LOADING	
381	X-3669-321-0	GEAR (C) ASSY	
382	X-3679-268-1	MOTOR ASSY, L	M904
383	♦:1-605-071-00	PC BOARD, LM-8	
384	♦:3-669-613-00	INSULATOR, L MOTOR	
385	3-669-595-00	WASHER (2), STOPPER	
387	3-657-841-31	SPACER (2X2.5)	
388	3-701-439-11	WASHER	
389	♦:X-3679-265-1	SLIDER ASSY (2), T	
390	3-679-362-00	SCREW (M2X4), PAN	
391	3-683-454-01	WASHER, POLYETHYLENE	

5-9. DRUM AND S LOADING ASSEMBLY

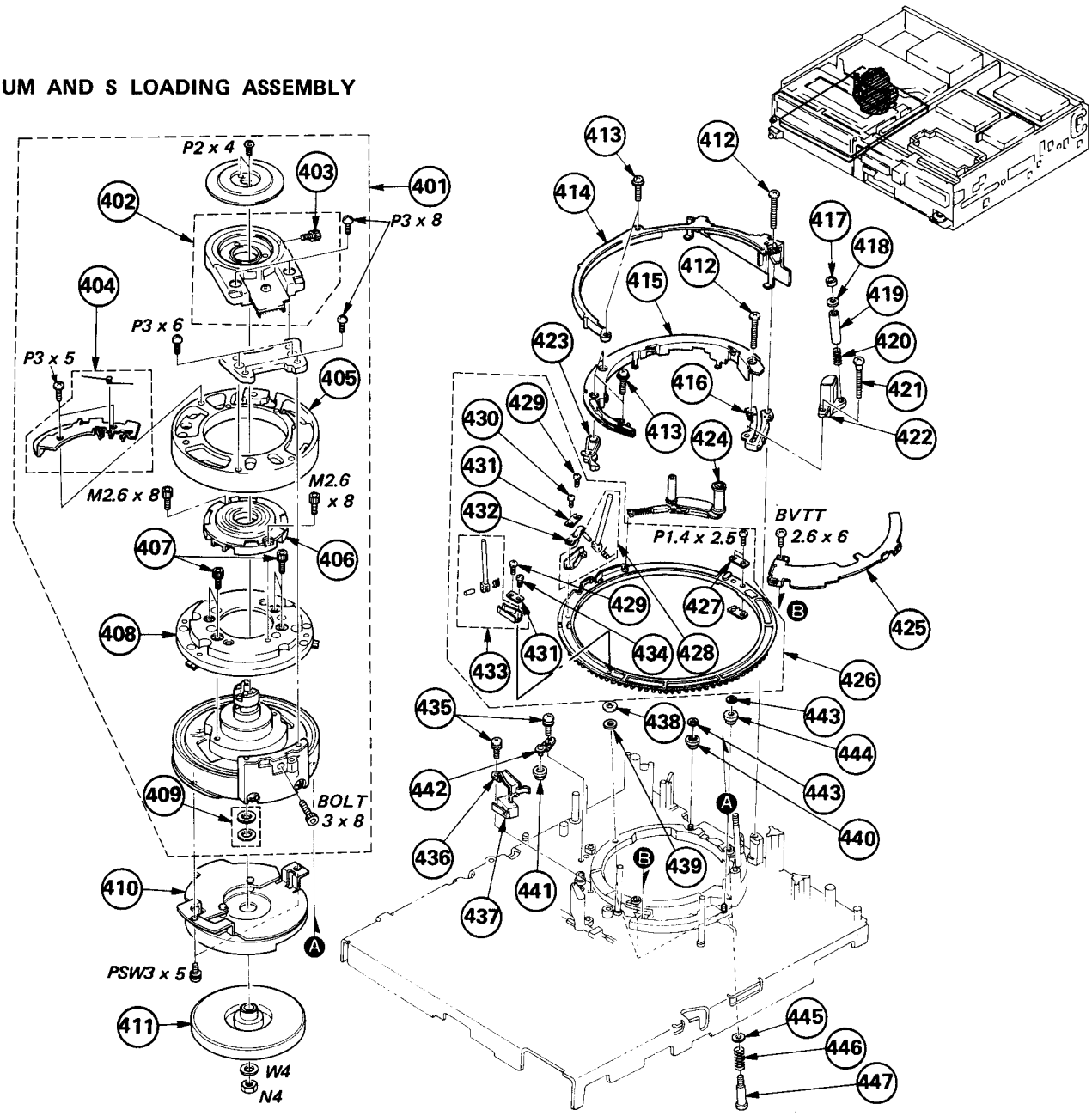

No.	Part No.	Description	Remark
401	A-6050-233-A	DRUM ASSY (DSH-48A-R)	402,404-409
402	A-6050-237-A	GUIDE ARM ASSY	403
403	3-681-360-01	BOLT, HEX, SOCKET (WASHER) 2.6x8	
404	A-6760-066-B	SPRING ASSY, TAPE RETAINER	
405	A-6760-178-A	DRUM ASSY, UPPER	
406	X-3681-312-1	ROTARY COUPLER ASSY	
407	3-669-157-00	BOLT (WASHER)(2.6x8)	
408	A-6762-165-A	DISK ASSY (DSR-48-R)	
409	X-3669-105-0	SPACER BLOCK ASSY	
410	X-2621-204-0	STATOR ASSY, D	
411	X-2621-202-0	ROTOR ASSY, D	
412	3-669-466-21	SCREW (M 2.6)	
413	3-669-480-11	+ PTPWH 2	
414	♦:3-669-585-00	GUIDE (2), SHUTTLE	
415	♦:3-679-290-00	GUIDE (1-YA), SHUTTLE	
416	♦:X-3679-263-1	BASE ASSY, SLANT	
417	3-669-446-00	NUT, GUIDE, NO. 6	
418	3-679-910-00	FLANGE (S), GUIDE, NUMBER 6	
419	3-669-445-00	SPACER, GUIDE, NO. 6	
420	3-669-615-00	SPRING, COMPRESSION	
421	3-669-606-00	SCREW (2.6)	
422	8-825-508-10	HEAD, FE (FULL ERASE)	
423	X-3669-327-0	ARM ASSY, SWITCH, ULE	
424	A-6750-158-A	SHUTTLE (2) BLOCK ASSY	

No.	Part No.	Description	Remark
425	♦:3-669-477-00	LINER, LINK, PIN	
426	X-3679-150-0	RING (YA) ASSY, S LOADING	427-434
427	♦:3-669-616-00	RETAINER	
428	♦:X-3669-430-0	HOLDER BLOCK ASSY, #3 GUIDE	
429	3-669-478-00	SCREW (1X3), TAPPING	
430	3-669-479-11	SCREW (1.4X3.5), TAPPING	
431	♦:3-669-472-02	RETAINER, SPRING, LEAF	
432	3-672-583-00	SPRING	
433	♦:X-3669-429-0	HOLDER BLOCK ASSY, #2 GUIDE	
434	3-672-586-00	SCREW (1.4X3), TAPPING	
435	3-669-607-31	+PSW (SMALL ROUND) (2.6)	
436	♦:3-669-355-00	HOLDER, SWITCH, ULE	
437	1-553-718-00	SWITCH, MICRO (UNLOADING END)	S904
438	3-669-646-00	SPACER, DRUM	
439	3-669-646-11	SPACER, DRUM	
440	3-669-630-00	ROLLER (C), RING	
441	3-669-360-00	ROLLER, RING	
442	♦:X-3669-329-0	PLATE ASSY, ADJUSTMENT	
443	3-669-465-00	WASHER (1.5), STOPPER	
444	3-669-597-00	ROLLER (B), RING	
445	3-669-600-11	WASHER, FLAT (3.5)	
446	3-429-123-00	SPRING	
447	3-669-302-00	SCREW, FITTING	

5-10. HARDWARE LIST

SCREW

7-621-259-32 SCREW +P 2.6X5
7-621-259-35 SCREW +P 2.6X5
7-621-759-35 +PSW, 2.6X5
7-621-759-45 +PSW, 2.6X6
7-627-551-08 SCREW, PRECISION +P 1.4X1.6

7-627-551-28 SCREW, PRECISION +P 1.4X2.5
7-627-552-38 SCREW, PRECISION +P 1.7X3
7-628-253-05 SCREW +PS 2X4
7-628-253-45 SCREW +PS 2X10
7-628-253-95 SCREW +PS 2.6X4

7-628-254-15 SCREW +PS 2.6X6
7-685-134-11 SCREW +P 2.6X8 TYPE2 NON-SLIT
7-685-134-21 SCREW +P 2.6X8 TYPE2 SLIT
7-685-135-11 SCREW +P 2.6X10 TYPE2 NON-SLIT
7-685-534-11 SCREW +BTP 2.6X8 TYPE2 N-S

7-685-791-01 SCREW +PTT 2.6X5 (S)
7-685-861-09 SCREW +BVTT 2.6X5 (S)
7-685-862-01 SCREW +BVTT 2.6X6 (S)
7-685-871-01 SCREW +BVTT 3X6 (S)

SET-SCREW

7-621-712-26 SET-SCREW, SLOT 2.6X3FLAT POINT
7-621-712-35 SET-SCREW, SLOT 2.6X4CONE POINT
7-621-712-46 SET-SCREW, SLOT 2.6X5FLAT POINT

NUT

7-622-205-05 N 2, TYPE 2

RING

7-624-118-01 RING, RETAINING E-2.5
7-624-190-61 STOP RING 2.4, TYPE-CS

SPRING PIN

7-626-302-31 SPRING PIN, 2.5X14

FILM

7-632-658-01 FILM

TAPPING

7-685-105-11 TPG +P 2X8, TYPE 2, NON-SLIT

WASHER

7-688-002-11 W 2.6, MIDDLE
7-688-004-01 W 4, SMALL

R STATOR | PT-7 | YC-28

SECTION 6
ELECTRICAL PARTS LIST

NOTE:

The components identified by shading and mark ⚠ are critical for safety. Replace only with part number specified.

- =>: Due to standardization, interchangeable replacements may be substituted for parts specified in the diagrams.
- Items marked " ♦ " are not stocked since they are seldom required for routine service. Some delay should be anticipated when ordering these items.
- All variable and adjustable resistors have characteristic curve B, unless otherwise noted.

CAPACITORS
- MF : μF, PF : μμF

RESISTORS
- All resistors are in ohms
- F : nonflammable

COILS
- MMH : mH, UH : μH

Ref.No	Part No.	Description			Remark
	♦:A-4910-021-B	R STATOR (REEL MOTOR) BOARD, COMPLETE **********			
	♦:1-560-460-00	PIN, CONNECTOR 4P			
		CAPACITOR			
C1	1-123-821-00	ELECT	47MF	20% 16V	
C2	1-123-821-00	ELECT	47MF	20% 16V	
C3	1-123-821-00	ELECT	47MF	20% 16V	
C4	1-123-821-00	ELECT	47MF	20% 16V	
		DIODE			
D1	8-719-941-48	DIODE 1N4148TP			
		IC			
IC1	8-759-108-77	IC CX877			
		TRANSISTOR			
Q1	8-729-100-01	TRANSISTOR 2SD992			
Q2	8-729-100-01	TRANSISTOR 2SD992			
Q3	8-729-100-01	TRANSISTOR 2SD992			
Q4	8-729-100-01	TRANSISTOR 2SD992			
Q5	8-729-100-01	TRANSISTOR 2SD992			
Q6	8-729-100-01	TRANSISTOR 2SD992			
		RESISTOR			
R1	1-247-823-00	CARBON	470	5% 1/6W	
R2	1-247-823-00	CARBON	470	5% 1/6W	
R3	1-247-823-00	CARBON	470	5% 1/6W	
R4	1-247-829-00	CARBON	820	5% 1/6W	
R5	1-247-871-00	CARBON	47K	5% 1/6W	
R6	1-247-871-00	CARBON	47K	5% 1/6W	
R7	1-247-871-00	CARBON	47K	5% 1/6W	
R8	1-247-871-00	CARBON	47K	5% 1/6W	
		DIODE			
S1	8-719-810-31	DIODE THS103-1			
S2	8-719-810-31	DIODE THS103-1			

When indicating parts by reference number, please include the board name.

Ref.No	Part No.	Description			Remark
	♦:A-6023-241-A	PT-7 BOARD, COMPLETE **********			
	♦:3-684-037-01	HEAT SINK, PT			
	7-621-770-87	SCREW +B 2.6X5			
		CAPACITOR			
C001	1-123-356-00	ELECT	10MF	20% 16V	
C002	1-123-356-00	ELECT	10MF	20% 16V	
C003	1-101-006-00	CERAMIC	0.047MF	50V	
C004	1-123-380-00	ELECT	1MF	20% 50V	
C005	1-101-888-00	CERAMIC	68PF	5% 50V	
C006	1-101-888-00	CERAMIC	68PF	5% 50V	
C007	1-123-308-00	ELECT	220MF	20% 10V	
C008	1-123-308-00	ELECT	220MF	20% 10V	
C009	1-123-322-00	ELECT	330MF	20% 16V	
C010	1-123-839-00	ELECT	1000MF	20% 16V	
		CONNECTOR			
CN002	♦:1-560-891-00	PIN, CONNECTOR 3P			
CN003	♦:1-560-891-00	PIN, CONNECTOR 3P			
CN004	♦:1-560-894-00	PIN, CONNECTOR 6P			
		DIODE			
D001	8-719-911-19	DIODE 1SS119			
		IC			
IC001	8-759-745-56	IC NJM4556D			
		TRANSISTOR			
Q001	8-729-316-16	TRANSISTOR 2SC1061			
Q002	8-729-316-16	TRANSISTOR 2SC1061			
Q003	8-729-178-54	TRANSISTOR 2SC2785			
		RESISTOR			
R001	1-247-866-00	CARBON	30K	5% 1/6W	
R002	1-247-866-00	CARBON	30K	5% 1/6W	
R003	1-247-866-00	CARBON	30K	5% 1/6W	
R004	1-247-866-00	CARBON	30K	5% 1/6W	
R005	1-247-871-00	CARBON	47K	5% 1/6W	
R006	1-247-871-00	CARBON	47K	5% 1/6W	
R007	1-247-831-00	CARBON	1K	5% 1/6W	
R008	1-247-831-00	CARBON	1K	5% 1/6W	
R009	1-247-801-00	CARBON	56	5% 1/6W	
R010	1-247-801-00	CARBON	56	5% 1/6W	
R011	1-247-831-00	CARBON	1K	5% 1/6W	

****

♦:A-6711-527-A	YC-28 BOARD, COMPLETE **********		
1-536-796-21	TERMINAL BOARD, CONTROL PANEL		

YC-28

Ref.No	Part No.	Description			Remark
		FILTER BAND PASS			
BPF001	1-235-098-00	FILTER, BAND PASS			
		CAPACITOR			
C001	1-123-356-00	ELECT	10MF	20%	16V
C002	1-123-356-00	ELECT	10MF	20%	16V
C003	1-123-356-00	ELECT	10MF	20%	16V
C004	1-123-356-00	ELECT	10MF	20%	16V
C005	1-123-356-00	ELECT	10MF	20%	16V
C006	1-123-356-00	ELECT	10MF	20%	16V
C007	1-101-004-00	CERAMIC	0.01MF		50V
C008	1-123-332-00	ELECT	47MF	20%	16V
C009	1-123-311-00	ELECT	1000MF	20%	10V
C010	1-123-356-00	ELECT	10MF	20%	16V
C011	1-123-356-00	ELECT	10MF	20%	25V
C013	1-123-306-00	ELECT	47MF	20%	10V
C014	1-123-381-00	ELECT	2.2MF	20%	50V
C015	1-123-306-00	ELECT	47MF	20%	10V
C016	1-108-589-00	MYLAR	0.027MF	5%	50V
C017	1-101-004-00	CERAMIC	0.01MF		50V
C018	1-123-306-00	ELECT	47MF	20%	10V
C019	1-101-004-00	CERAMIC	0.01MF		50V
C020	1-101-004-00	CERAMIC	0.01MF		50V
C021	1-101-004-00	CERAMIC	0.01MF		50V
C022	1-101-004-00	CERAMIC	0.01MF		50V
C023	1-101-882-00	CERAMIC	51PF	5%	50V
C024	1-130-047-00	FILM	180PF	5%	50V
C025	1-108-555-00	MYLAR	0.001MF	5%	50V
C026	1-101-059-00	CERAMIC	510PF	5%	50V
C027	1-161-007-00	CERAMIC	0.0033MF	10%	25V
C028	1-108-555-00	MYLAR	0.001MF	5%	50V
C029	1-123-354-00	ELECT	3.3MF	20%	50V
C031	1-101-004-00	CERAMIC	0.01MF		50V
C032	1-102-816-00	CERAMIC	120PF	5%	50V
C033	1-101-004-00	CERAMIC	0.01MF		50V
C034	1-101-004-00	CERAMIC	0.01MF		50V
C035	1-102-816-00	CERAMIC	120PF	5%	50V
C036	1-101-882-00	CERAMIC	51PF	5%	50V
C037	1-101-004-00	CERAMIC	0.01MF		50V
C038	1-101-004-00	CERAMIC	0.01MF		50V
C039	1-101-004-00	CERAMIC	0.01MF		50V
C040	1-101-004-00	CERAMIC	0.01MF		50V
C041	1-161-005-00	CERAMIC	0.0022MF	10%	25V
C042	1-102-516-00	CERAMIC	27PF	5%	50V
C043	1-101-004-00	CERAMIC	0.01MF		50V
C044	1-101-004-00	CERAMIC	0.01MF		50V
C045	1-102-523-00	CERAMIC	56PF	5%	50V
C046	1-101-004-00	CERAMIC	0.01MF		50V
C047	1-101-004-00	CERAMIC	0.01MF		50V
C048	1-101-004-00	CERAMIC	0.01MF		50V
C049	1-101-004-00	CERAMIC	0.01MF		50V
C050	1-102-865-00	CERAMIC	8PF	0.5PF	50V
C051	1-102-525-00	CERAMIC	68PF	5%	50V
C052	1-102-525-00	CERAMIC	68PF	5%	50V
C053	1-123-380-00	ELECT	1MF	20%	50V
C054	1-161-002-00	CERAMIC	0.0012MF	10%	25V
C055	1-123-380-00	ELECT	1MF	20%	50V
C056	1-102-962-00	CERAMIC	30PF	5%	50V
C057	1-102-981-00	CERAMIC	300PF	5%	50V
C058	1-123-306-00	ELECT	47MF	20%	10V
C059	1-101-004-00	CERAMIC	0.01MF		50V
C060	1-108-579-00	MYLAR	0.01MF	5%	50V
C061	1-123-354-00	ELECT	3.3MF	20%	50V
C062	1-123-306-00	ELECT	47MF	20%	10V
C063	1-101-004-00	CERAMIC	0.01MF		50V
C064	1-102-521-00	CERAMIC	43PF	5%	50V
C065	1-102-852-00	CERAMIC	47PF	5%	50V
C066	1-102-852-00	CERAMIC	47PF	5%	50V
C067	1-161-772-00	CERAMIC	0.1MF		25V
C068	1-101-004-00	CERAMIC	0.01MF		50V
C069	1-102-962-00	CERAMIC	30PF	5%	50V
C070	1-101-004-00	CERAMIC	0.01MF		50V
C071	1-123-380-00	ELECT	1MF	20%	50V
C072	1-101-004-00	CERAMIC	0.01MF		50V
C073	1-102-525-00	CERAMIC	68PF	5%	50V
C074	1-102-525-00	CERAMIC	68PF	5%	50V
C075	1-101-004-00	CERAMIC	0.01MF		50V
C076	1-102-951-00	CERAMIC	15PF	5%	50V
C077	1-123-356-00	ELECT	10MF	20%	16V
C078	1-123-356-00	ELECT	10MF	20%	16V
C080	1-101-004-00	CERAMIC	0.01MF		50V
C082	1-161-024-00	CERAMIC	0.082MF	10%	25V
C083	1-102-977-00	CERAMIC	200PF	5%	50V
C084	1-123-328-00	ELECT	4.7MF	20%	25V
C085	1-101-004-00	CERAMIC	0.01MF		50V
C086	1-108-557-00	MYLAR	0.0012MF	5%	50V
C087	1-161-019-00	CERAMIC	0.033MF	10%	25V
C088	1-101-361-00	CERAMIC	150PF	5%	50V
C092	1-101-004-00	CERAMIC	0.01MF		50V
C093	1-101-006-00	CERAMIC	0.047MF		50V
C095	1-102-976-00	CERAMIC	180PF	5%	50V
C096	1-102-824-00	CERAMIC	470PF	5%	50V
C097	1-102-823-00	CERAMIC	43PF	5%	50V
C098	1-102-820-00	CERAMIC	330PF	5%	50V
C099	1-102-851-00	CERAMIC	15PF	5%	50V
C100	1-161-025-00	CERAMIC	0.1MF	10%	25V
C101	1-108-595-00	MYLAR	0.047MF	5%	50V
C102	1-161-005-00	CERAMIC	0.0022MF	10%	25V
C103	1-108-555-00	MYLAR	0.001MF	5%	50V
C104	1-102-977-00	CERAMIC	200PF	5%	50V
C105	1-102-973-00	CERAMIC	100PF	5%	50V
C106	1-123-356-00	ELECT	10MF	20%	16V
C107	1-161-025-00	CERAMIC	0.1MF	10%	25V
C108	1-101-004-00	CERAMIC	0.01MF		50V
C109	1-101-004-00	CERAMIC	0.01MF		50V

When indicating parts by reference number, please include the board name.

YC-28

Ref.No	Part No.	Description			Remark
C110	1-123-306-00	ELECT	47MF	20%	10V
C111	1-101-882-00	CERAMIC	51PF	5%	50V
C112	1-101-004-00	CERAMIC	0.01MF		50V
C113	1-101-006-00	CERAMIC	0.047MF		50V
C114	1-101-880-00	CERAMIC	47PF	5%	50V
C116	1-101-004-00	CERAMIC	0.01MF		50V
C117	1-101-361-00	CERAMIC	150PF		50V
C118	1-101-004-00	CERAMIC	0.01MF		50V
C119	1-123-306-00	ELECT	47MF	20%	10V
C120	1-101-004-00	CERAMIC	0.01MF		50V
C121	1-101-004-00	CERAMIC	0.01MF		50V
C122	1-101-004-00	CERAMIC	0.01MF		50V
C123	1-101-004-00	CERAMIC	0.01MF		50V
C124	1-102-948-00	CERAMIC	11PF	5%	50V
C125	1-123-330-00	ELECT	22MF	20%	16V
C127	1-123-318-00	ELECT	33MF	20%	16V
C128	1-123-330-00	ELECT	22MF	20%	16V
C129	1-123-330-00	ELECT	22MF	20%	16V
C130	1-123-356-00	ELECT	10MF	20%	16V
C131	1-123-380-00	ELECT	1MF	20%	50V
C132	1-123-328-00	ELECT	4.7MF	20%	25V
C133	1-102-851-00	CERAMIC	15PF	5%	50V
C134	1-102-821-00	CERAMIC	360PF	5%	50V
C135	1-102-823-00	CERAMIC	43PF	5%	50V
C136	1-102-976-00	CERAMIC	180PF	5%	50V
C137	1-102-513-00	CERAMIC	18PF	5%	50V
C138	1-102-529-00	CERAMIC	100PF	5%	50V
C139	1-102-529-00	CERAMIC	100PF	5%	50V
C140	1-102-519-00	CERAMIC	36PF	5%	50V
C141	1-102-529-00	CERAMIC	100PF	5%	50V
C142	1-123-328-00	ELECT	4.7MF	20%	25V
C144	1-102-511-00	CERAMIC	13PF	5%	50V
C145	1-102-522-00	CERAMIC	51PF	5%	50V
C146	1-102-522-00	CERAMIC	51PF	5%	50V
C147	1-102-511-00	CERAMIC	13PF	5%	50V
C148	1-101-006-00	CERAMIC	0.047MF		50V
C155	1-101-004-00	CERAMIC	0.01MF		50V
C156	1-101-004-00	CERAMIC	0.01MF		50V
C157	1-102-981-00	CERAMIC	300PF	5%	50V
C158	1-102-948-00	CERAMIC	11PF	5%	50V
C159	1-102-822-00	CERAMIC	390PF	5%	50V
C178	1-123-330-00	ELECT	22MF	20%	16V
C179	1-123-356-00	ELECT	10MF	20%	16V
C180	1-123-332-00	ELECT	47MF	20%	16V
C181	1-108-569-00	MYLAR	0.0039MF	5%	50V
C182	1-123-356-00	ELECT	10MF	20%	16V
C183	1-101-006-00	CERAMIC	0.047MF		50V
C184	1-123-332-00	ELECT	47MF	20%	16V
C185	1-123-333-00	ELECT	100MF	20%	16V
C186	1-101-004-00	CERAMIC	0.01MF		50V
C187	1-123-330-00	ELECT	22MF	20%	16V
C188	1-161-025-00	CERAMIC	0.1MF	10%	25V
C189	1-123-356-00	ELECT	10MF	20%	16V

Ref.No	Part No.	Description			Remark
C190	1-123-311-00	ELECT	1000MF	20%	10V
C191	1-101-004-00	CERAMIC	0.01MF		50V
C192	1-123-328-00	ELECT	4.7MF	20%	25V
C196	1-123-380-00	ELECT	1MF	20%	50V
C197	1-123-356-00	ELECT	10MF	20%	16V
C198	1-102-980-00	CERAMIC	270PF	5%	50V
C200	1-101-004-00	CERAMIC	0.01MF		50V
C201	1-123-356-00	ELECT	10MF	20%	16V
C202	1-101-004-00	CERAMIC	0.01MF		50V
C203	1-101-004-00	CERAMIC	0.01MF		50V
C204	1-123-328-00	ELECT	4.7MF	20%	25V
C206	1-101-004-00	CERAMIC	0.01MF		50V
C207	1-161-025-00	CERAMIC	0.1MF	10%	25V
C208	1-123-356-00	ELECT	10MF	20%	16V
C211	1-123-356-00	ELECT	10MF	20%	16V
C212	1-123-333-00	ELECT	100MF	20%	16V
C214	1-123-356-00	ELECT	10MF	20%	16V
C215	1-123-330-00	ELECT	22MF	20%	16V
C217	1-161-025-00	CERAMIC	0.1MF	10%	25V
C230	1-124-475-11	ELECT	470MF	20%	16V
C241	1-161-772-00	CERAMIC	0.1MF	10%	25V
C243	1-161-772-00	CERAMIC	0.1MF	10%	25V
C244	1-101-006-00	CERAMIC	0.047MF		50V
C245	1-101-006-00	CERAMIC	0.047MF		50V
C246	1-161-772-00	CERAMIC	0.1MF	10%	25V
C247	1-123-320-00	ELECT	100MF	20%	16V
C401	1-123-381-00	ELECT	2.2MF	20%	50V
C402	1-101-001-00	CERAMIC	0.001MF		50V
C403	1-101-001-00	CERAMIC	0.001MF		50V
C404	1-101-004-00	CERAMIC	0.01MF		50V
C405	1-123-330-00	ELECT	22MF	20%	16V
C406	1-123-330-00	ELECT	22MF	20%	16V
C407	1-102-962-00	CERAMIC	30PF	5%	50V
C408	1-101-888-00	CERAMIC	68PF	5%	50V
C409	1-123-381-00	ELECT	2.2MF	20%	50V
C410	1-102-936-00	CERAMIC	3PF	0.25PF	50V
C411	1-101-005-00	CERAMIC	0.022MF		50V
C412	1-123-318-00	ELECT	33MF	20%	16V
C414	1-123-318-00	ELECT	33MF	20%	16V
C415	1-123-356-00	ELECT	10MF	20%	16V
C416	1-102-948-00	CERAMIC	11PF	5%	50V
C417	1-102-948-00	CERAMIC	11PF	5%	50V
C418	1-102-965-00	CERAMIC	39PF	5%	50V
C419	1-123-356-00	ELECT	10MF	20%	16V
C420	1-123-328-00	ELECT	4.7MF	20%	25V
C421	1-101-006-00	CERAMIC	0.047MF		50V
C501	1-101-004-00	CERAMIC	0.01MF		50V
C502	1-101-004-00	CERAMIC	0.01MF		50V
C503	1-101-004-00	CERAMIC	0.01MF		50V
C504	1-101-005-00	CERAMIC	0.022MF		50V
C505	1-102-822-00	CERAMIC	390PF	5%	50V
C506	1-101-006-00	CERAMIC	0.047MF		50V
C507	1-123-318-00	ELECT	33MF	20%	16V

When indicating parts by reference number, please include the board name.

Ref.No	Part No.	Description	Remark
		FILTER	
CF001	1-527-998-00	FILTER, CERAMIC	
CF002	1-527-875-00	FILTER, CERAMIC	
CF003	1-527-849-00	FILTER, CERAMIC	
		CONNECTOR	
CN001	1-564-035-11	PIN, CONNECTOR 10P	
CN003	1-560-891-00	PIN, CONNECTOR 3P	
CN004	1-560-895-00	PIN, CONNECTOR 7P	
CN005	1-560-893-00	PIN, CONNECTOR 5P	
CN006	1-560-893-00	PIN, CONNECTOR 5P	
CN007	1-560-898-00	PIN, CONNECTOR 10P	
CN008	1-560-895-00	PIN, CONNECTOR 7P	
CN009	1-507-840-00	JACK, MINIATURE	
CN010	1-562-121-00	CONNECTOR, DIN 6P	
		TRIMMER	
CV001	1-141-275-00	CAP, TRIMMER	
		DIODE	
D001	=>8-719-911-19	DIODE 1SS119	
D002	=>8-719-911-19	DIODE 1SS119	
D005	=>8-719-911-19	DIODE 1SS119	
D006	8-719-000-06	DIODE MC921	
D009	8-719-000-06	DIODE MC921	
D011	=>8-719-911-19	DIODE 1SS119	
D012	=>8-719-911-19	DIODE 1SS119	
D013	=>8-719-911-19	DIODE 1SS119	
D014	=>8-719-911-19	DIODE 1SS119	
D015	=>8-719-911-19	DIODE 1SS119	
D016	8-719-000-12	DIODE MC931	
D017	=>8-719-911-19	DIODE 1SS119	
D018	=>8-719-911-19	DIODE 1SS119	
D019	=>8-719-911-19	DIODE 1SS119	
D020	=>8-719-911-19	DIODE 1SS119	
D021	=>8-719-911-19	DIODE 1SS119	
D022	=>8-719-911-19	DIODE 1SS119	
D023	=>8-719-911-19	DIODE 1SS119	
D025	=>8-719-911-19	DIODE 1SS119	
D027	8-719-000-06	DIODE MC921	
D029	8-719-100-56	DIODE RD10-EB1	
D030	=>8-719-911-19	DIODE 1SS119	
D031	=>8-719-911-19	DIODE 1SS119	
D033	=>8-719-911-19	DIODE 1SS119	
D036	=>8-719-911-19	DIODE 1SS119	
		DELAY LINE	
DL001	1-415-313-00	DELAY LINE (1H)	
DL401	1-415-352-11	DELAY LINE, 1H	
DL501	1-415-282-00	DELAY LINE	

Ref.No	Part No.	Description	Remark
		IC	
IC001	8-759-909-20	IC BA634	
IC002	8-759-904-95	IC BA7007	
IC003	8-759-202-47	IC CX10023	
IC004	8-759-208-94	IC CX894	
IC005	8-752-006-10	IC CX20061	
IC006	8-759-202-00	IC CX10021A-NP	
IC009	8-759-101-62	IC CX20043	
IC011	8-752-006-10	IC CX20061	
IC012	8-759-979-26	IC CX7926	
IC401	8-758-661-00	IC CX866A	
		COIL	
L001	1-407-499-00	MICRO INDUCTOR 3.9MMH	
L002	1-407-496-00	MICRO INDUCTOR 2.2MMH	
L003	1-408-408-00	MICRO INDUCTOR 8.2UH	
L004	1-408-406-00	MICRO INDUCTOR 5.6UH	
L005	1-408-415-00	MICRO INDUCTOR 33UH	
L006	1-408-429-00	MICRO INDUCTOR 470UH	
L007	1-408-427-00	MICRO INDUCTOR 330UH	
L008	1-408-421-11	MICRO INDUCTOR 100UH	
L010	1-408-427-00	MICRO INDUCTOR 330UH	
L011	1-408-423-00	MICRO INDUCTOR 150UH	
L012	1-408-409-00	MICRO INDUCTOR 10UH	
L014	1-408-422-00	MICRO INDUCTOR 120UH	
L015	1-408-419-00	MICRO INDUCTOR 68UH	
L016	1-408-413-00	MICRO INDUCTOR 22UH	
L017	1-408-423-00	MICRO INDUCTOR 150UH	
L018	1-408-419-00	MICRO INDUCTOR 68UH	
L019	1-408-416-00	MICRO INDUCTOR 39UH	
L020	1-408-416-00	MICRO INDUCTOR 39UH	
L021	1-408-422-00	MICRO INDUCTOR 120UH	
L022	1-408-424-00	MICRO INDUCTOR 180UH	
L023	1-408-422-00	MICRO INDUCTOR 120UH	
L026	1-408-419-00	MICRO INDUCTOR 68UH	
L401	1-408-397-00	MICRO INDUCTOR 1UH	
L402	1-408-397-00	MICRO INDUCTOR 1UH	
L501	1-408-408-00	MICRO INDUCTOR 8.2UH	
L502	1-408-423-00	MICRO INDUCTOR 150UH	
		FILTER LOW PASS	
LPF001	1-235-097-00	FILTER, LOW PASS	
		VARIABLE COIL	
LV001	1-407-291-00	MICRO INDUCTOR 15MMH	
LV002	1-407-573-00	COIL, VARIABLE 47UH	
LV003	1-407-571-00	COIL, VARIABLE 22UH	
LV501	1-407-569-00	COIL, VARIABLE 10UH	
		IC LINK	
PS001 ⚠	1-532-685-11	LINK, IC (N-20 0.8A)	

NOTE:

The components identified by shading and mark ⚠ are critical for safety. Replace only with part number specified.

When indicating parts by reference number, please include the board name.

YC-28

Ref.No	Part No.	Description	Remark
		TRANSISTOR	
Q001	8-729-900-36	TRANSISTOR DTC124ES	
Q002	=>8-729-245-83	TRANSISTOR 2SC2458	
Q003	8-729-600-12	TRANSISTOR 2SK108	
Q004	=>8-729-245-83	TRANSISTOR 2SC2458	
Q005	8-729-600-12	TRANSISTOR 2SK108	
Q007	=>8-729-245-83	TRANSISTOR 2SC2458	
Q010	8-729-177-32	TRANSISTOR 2SD773	
Q011	=>8-729-204-83	TRANSISTOR 2SA1048-GR	
Q014	8-729-113-33	TRANSISTOR 2SB733-4	
Q015	=>8-729-245-83	TRANSISTOR 2SC2458	
Q016	=>8-729-245-83	TRANSISTOR 2SC2458	
Q019	=>8-729-204-83	TRANSISTOR 2SA1048-GR	
Q020	=>8-729-204-83	TRANSISTOR 2SA1048-GR	
Q021	=>8-729-245-83	TRANSISTOR 2SC2458	
Q022	=>8-729-245-83	TRANSISTOR 2SC2458	
Q023	=>8-729-245-83	TRANSISTOR 2SC2458	
Q024	=>8-729-204-83	TRANSISTOR 2SA1048-GR	
Q025	=>8-729-245-83	TRANSISTOR 2SC2458	
Q026	=>8-729-204-83	TRANSISTOR 2SA1048-GR	
Q027	=>8-729-204-83	TRANSISTOR 2SA1048-GR	
Q028	=>8-729-245-83	TRANSISTOR 2SC2458	
Q029	=>8-729-245-83	TRANSISTOR 2SC2458	
Q030	=>8-729-245-83	TRANSISTOR 2SC2458	
Q031	=>8-729-245-83	TRANSISTOR 2SC2458	
Q032	=>8-729-245-83	TRANSISTOR 2SC2458	
Q033	=>8-729-245-83	TRANSISTOR 2SC2458	
Q034	=>8-729-245-83	TRANSISTOR 2SC2458	
Q035	8-729-603-50	TRANSISTOR 2SC403SP	
Q036	8-729-603-50	TRANSISTOR 2SC403SP	
Q037	8-729-384-46	TRANSISTOR 2SA844-C	
Q038	8-729-384-46	TRANSISTOR 2SA844-C	
Q039	8-729-603-50	TRANSISTOR 2SC403SP	
Q040	8-729-603-50	TRANSISTOR 2SC403SP	
Q041	8-729-384-46	TRANSISTOR 2SA844-C	
Q042	8-729-603-50	TRANSISTOR 2SC403SP	
Q043	8-729-603-50	TRANSISTOR 2SC403SP	
Q044	8-729-603-50	TRANSISTOR 2SC403SP	
Q045	8-729-384-46	TRANSISTOR 2SA844-C	
Q047	8-729-603-50	TRANSISTOR 2SC403SP	
Q048	8-729-603-50	TRANSISTOR 2SC403SP	
Q049	8-729-603-50	TRANSISTOR 2SC403SP	
Q050	8-729-603-50	TRANSISTOR 2SC403SP	
Q051	8-729-384-46	TRANSISTOR 2SA844-C	
Q052	8-729-603-50	TRANSISTOR 2SC403SP	
Q053	8-729-384-46	TRANSISTOR 2SA844-C	
Q054	8-729-384-46	TRANSISTOR 2SA844-C	
Q055	8-729-384-46	TRANSISTOR 2SA844-C	
Q056	8-729-603-50	TRANSISTOR 2SC403SP	
Q060	=>8-729-204-83	TRANSISTOR 2SA1048-GR	
Q061	=>8-729-245-83	TRANSISTOR 2SC2458	
Q062	=>8-729-204-83	TRANSISTOR 2SA1048-GR	
Q063	=>8-729-245-83	TRANSISTOR 2SC2458	
Q064	=>8-729-245-83	TRANSISTOR 2SC2458	
Q065	=>8-729-245-83	TRANSISTOR 2SC2458	
Q066	⚠8-729-117-54	TRANSISTOR 2SA1175	
Q067	=>8-729-245-83	TRANSISTOR 2SC2458	
Q068	=>8-729-245-83	TRANSISTOR 2SC2458	
Q069	=>8-729-204-83	TRANSISTOR 2SA1048-GR	
Q070	8-729-603-50	TRANSISTOR 2SC403SP	
Q071	=>8-729-245-83	TRANSISTOR 2SC2458	
Q072	=>8-729-245-83	TRANSISTOR 2SC2458	
Q074	=>8-729-245-83	TRANSISTOR 2SC2458	
Q075	8-729-900-85	TRANSISTOR DTC144WS	
Q100	8-729-900-85	TRANSISTOR DTC144WS	
Q101	8-729-900-89	TRANSISTOR DTC144ES	
Q102	8-729-900-65	TRANSISTOR DTA144ES	
Q103	=>8-729-245-83	TRANSISTOR 2SC2458	
Q401	=>8-729-245-83	TRANSISTOR 2SC2458	
Q501	=>8-729-245-83	TRANSISTOR 2SC2458	
Q502	=>8-729-245-83	TRANSISTOR 2SC2458	
Q503	=>8-729-245-83	TRANSISTOR 2SC2458	
Q504	=>8-729-245-83	TRANSISTOR 2SC2458	
		RESISTOR	
R001	1-247-838-00	CARBON 2K 5% 1/6W	
R003	1-247-831-00	CARBON 1K 5% 1/6W	
R005	1-247-827-00	CARBON 680 5% 1/6W	
R006	1-247-879-00	CARBON 100K 5% 1/6W	
R007	1-247-871-00	CARBON 47K 5% 1/6W	
R008	1-247-879-00	CARBON 100K 5% 1/6W	
R009	1-247-879-00	CARBON 100K 5% 1/6W	
R010	1-247-814-00	CARBON 200 5% 1/6W	
R011	1-247-871-00	CARBON 47K 5% 1/6W	
R012	1-247-827-00	CARBON 680 5% 1/6W	
R013	1-247-879-00	CARBON 100K 5% 1/6W	
R014	1-247-871-00	CARBON 47K 5% 1/6W	
R015	1-247-879-00	CARBON 100K 5% 1/6W	
R016	1-247-879-00	CARBON 100K 5% 1/6W	
R017	1-247-814-00	CARBON 200 5% 1/6W	
R018	1-247-871-00	CARBON 47K 5% 1/6W	
R022	1-247-847-00	CARBON 4.7K 5% 1/6W	
R026	1-247-867-00	CARBON 33K 5% 1/6W	
R027	1-247-867-00	CARBON 33K 5% 1/6W	
R028	1-247-877-00	CARBON 82K 5% 1/6W	
R029	1-247-855-00	CARBON 10K 5% 1/6W	
R030	1-247-867-00	CARBON 33K 5% 1/6W	
R031	⚠1-212-857-00	FUSIBLE 10 5% 1/4W	F
R032	1-247-831-00	CARBON 1K 5% 1/6W	
R035	1-247-859-00	CARBON 15K 5% 1/6W	
R037	1-247-869-00	CARBON 39K 5% 1/6W	
R038	1-247-837-00	CARBON 1.8K 5% 1/6W	
R039	⚠1-212-857-00	FUSIBLE 10 5% 1/4W	F
R040	⚠1-212-849-00	FUSIBLE 4.7 5% 1/4W	F
R041	1-247-838-00	CARBON 2K 5% 1/6W	

NOTE:

The components identified by shading and mark ⚠ are critical for safety. Replace only with part number specified.

When indicating parts by reference number, please include the board name.

Ref.No	Part No.	Description				Remark
R046	1-247-835-00	CARBON	1.5K	5%	1/6W	
R047	1-247-879-00	CARBON	100K	5%	1/6W	
R048	1-247-831-00	CARBON	1K	5%	1/6W	
R049	1-247-863-00	CARBON	22K	5%	1/6W	
R050	1-247-853-00	CARBON	8.2K	5%	1/6W	
R051	1-247-821-00	CARBON	390	5%	1/6W	
R052	1-247-819-00	CARBON	330	5%	1/6W	
R053	1-247-843-00	CARBON	3.3K	5%	1/6W	
R054	1-247-847-00	CARBON	4.7K	5%	1/6W	
R055	1-247-849-00	CARBON	5.6K	5%	1/6W	
R056	1-247-867-00	CARBON	33K	5%	1/6W	
R058	1-247-855-00	CARBON	10K	5%	1/6W	
R059	1-247-859-00	CARBON	15K	5%	1/6W	
R060	1-247-867-00	CARBON	33K	5%	1/6W	
R061	1-247-855-00	CARBON	10K	5%	1/6W	
R062	1-247-855-00	CARBON	10K	5%	1/6W	
R063	1-247-841-00	CARBON	2.7K	5%	1/6W	
R064	1-247-848-00	CARBON	5.1K	5%	1/6W	
R065	1-247-889-00	CARBON	270K	5%	1/6W	
R066	1-247-870-00	CARBON	43K	5%	1/6W	
R067	1-247-862-00	CARBON	20K	5%	1/6W	
R068	1-247-838-00	CARBON	2K	5%	1/6W	
R069	1-247-831-00	CARBON	1K	5%	1/6W	
R070	1-247-831-00	CARBON	1K	5%	1/6W	
R071	1-247-855-00	CARBON	10K	5%	1/6W	
R072	1-247-841-00	CARBON	2.7K	5%	1/6W	
R073	1-247-831-00	CARBON	1K	5%	1/6W	
R074	1-247-831-00	CARBON	1K	5%	1/6W	
R075	1-247-815-00	CARBON	220	5%	1/6W	
R076	1-247-855-00	CARBON	10K	5%	1/6W	
R077	1-247-855-00	CARBON	10K	5%	1/6W	
R078	1-247-867-00	CARBON	33K	5%	1/6W	
R079	1-247-855-00	CARBON	10K	5%	1/6W	
R080	1-247-853-00	CARBON	8.2K	5%	1/6W	
R081	1-247-843-00	CARBON	3.3K	5%	1/6W	
R082	1-247-871-00	CARBON	47K	5%	1/6W	
R083	1-247-825-00	CARBON	560	5%	1/6W	
R084	1-247-831-00	CARBON	1K	5%	1/6W	
R085	1-247-803-00	CARBON	68	5%	1/6W	
R086	1-247-825-00	CARBON	560	5%	1/6W	
R087	1-247-825-00	CARBON	560	5%	1/6W	
R088	1-247-801-00	CARBON	56	5%	1/6W	
R091	1-247-824-00	CARBON	510	5%	1/6W	
R092	1-247-791-00	CARBON	22	5%	1/6W	
R093	1-247-809-00	CARBON	120	5%	1/6W	
R094	1-247-869-00	CARBON	39K	5%	1/6W	
R095	1-247-872-00	CARBON	51K	5%	1/6W	
R096	1-247-879-00	CARBON	100K	5%	1/6W	
R097	1-247-882-00	CARBON	130K	5%	1/6W	
R098	1-247-890-00	CARBON	300K	5%	1/6W	
R100	1-247-869-00	CARBON	39K	5%	1/6W	
R101	1-247-864-00	CARBON	24K	5%	1/6W	
R103	1-247-831-00	CARBON	1K	5%	1/6W	

Ref.No	Part No.	Description				Remark
R104	1-247-839-00	CARBON	2.2K	5%	1/6W	
R105	1-247-829-00	CARBON	820	5%	1/6W	
R106	1-247-831-00	CARBON	1K	5%	1/6W	
R107	1-247-824-00	CARBON	510	5%	1/6W	
R108	1-247-829-00	CARBON	820	5%	1/6W	
R109	1-247-867-00	CARBON	33K	5%	1/6W	
R111	1-247-846-00	CARBON	4.3K	5%	1/6W	
R112	1-247-854-00	CARBON	9.1K	5%	1/6W	
R113	1-247-843-00	CARBON	3.3K	5%	1/6W	
R114	1-247-828-00	CARBON	750	5%	1/6W	
R115	1-247-879-00	CARBON	100K	5%	1/6W	
R116	1-247-853-00	CARBON	8.2K	5%	1/6W	
R117	1-247-845-00	CARBON	3.9K	5%	1/6W	
R118	1-247-867-00	CARBON	33K	5%	1/6W	
R119	1-247-855-00	CARBON	10K	5%	1/6W	
R120	1-247-831-00	CARBON	1K	5%	1/6W	
R121	1-247-831-00	CARBON	1K	5%	1/6W	
R122	1-247-839-00	CARBON	2.2K	5%	1/6W	
R123	1-247-841-00	CARBON	2.7K	5%	1/6W	
R124	1-247-819-00	CARBON	330	5%	1/6W	
R125	1-247-831-00	CARBON	1K	5%	1/6W	
R126	1-247-831-00	CARBON	1K	5%	1/6W	
R127	1-247-835-00	CARBON	1.5K	5%	1/6W	
R128	1-247-831-00	CARBON	1K	5%	1/6W	
R129	1-247-867-00	CARBON	33K	5%	1/6W	
R130	1-247-842-00	CARBON	3K	5%	1/6W	
R131	1-247-841-00	CARBON	2.7K	5%	1/6W	
R132	1-247-887-00	CARBON	220K	5%	1/6W	
R133	1-247-807-00	CARBON	100	5%	1/6W	
R134	1-247-845-00	CARBON	3.9K	5%	1/6W	
R135	1-247-883-00	CARBON	150K	5%	1/6W	
R136	1-247-879-00	CARBON	100K	5%	1/6W	
R137	1-247-857-00	CARBON	12K	5%	1/6W	
R138	1-247-861-00	CARBON	18K	5%	1/6W	
R139	1-247-841-00	CARBON	2.7K	5%	1/6W	
R140	1-247-867-00	CARBON	33K	5%	1/6W	
R141	1-247-831-00	CARBON	1K	5%	1/6W	
R142	1-247-842-00	CARBON	3K	5%	1/6W	
R143	1-247-855-00	CARBON	10K	5%	1/6W	
R144	1-247-824-00	CARBON	510	5%	1/6W	
R145	1-247-838-00	CARBON	2K	5%	1/6W	
R146	1-247-831-00	CARBON	1K	5%	1/6W	
R147	1-247-855-00	CARBON	10K	5%	1/6W	
R148	1-247-831-00	CARBON	1K	5%	1/6W	
R149	1-247-819-00	CARBON	330	5%	1/6W	
R150	1-247-863-00	CARBON	22K	5%	1/6W	
R151	1-247-812-00	CARBON	160	5%	1/6W	
R152	1-247-829-00	CARBON	820	5%	1/6W	
R153	1-247-863-00	CARBON	22K	5%	1/6W	
R154	1-247-821-00	CARBON	390	5%	1/6W	
R155	1-247-839-00	CARBON	2.2K	5%	1/6W	
R156	1-247-839-00	CARBON	2.2K	5%	1/6W	
R157	1-247-837-00	CARBON	1.8K	5%	1/6W	

When indicating parts by reference number, please include the board name.

YC-28

Ref.No	Part No.	Description				Remark
R158	1-247-817-00	CARBON	270	5%	1/6W	
R159	1-247-810-00	CARBON	130	5%	1/6W	
R160	1-247-832-00	CARBON	1.1K	5%	1/6W	
R161	1-247-855-00	CARBON	10K	5%	1/6W	
R162	1-247-835-00	CARBON	1.5K	5%	1/6W	
R163	1-247-842-00	CARBON	3K	5%	1/6W	
R164	1-247-830-00	CARBON	910	5%	1/6W	
R165	1-247-834-00	CARBON	1.3K	5%	1/6W	
R166	1-247-818-00	CARBON	300	5%	1/6W	
R167	1-247-849-00	CARBON	5.6K	5%	1/6W	
R168	1-247-836-00	CARBON	1.6K	5%	1/6W	
R169	1-247-840-00	CARBON	2.4K	5%	1/6W	
R170	1-247-804-00	CARBON	75	5%	1/6W	
R171	1-247-901-00	CARBON	820K	5%	1/6W	
R172	1-247-857-00	CARBON	12K	5%	1/6W	
R173	1-247-861-00	CARBON	18K	5%	1/6W	
R174	1-247-839-00	CARBON	2.2K	5%	1/6W	
R175	1-247-831-00	CARBON	1K	5%	1/6W	
R176	1-247-839-00	CARBON	2.2K	5%	1/6W	
R178	1-247-839-00	CARBON	2.2K	5%	1/6W	
R179	1-247-843-00	CARBON	3.3K	5%	1/6W	
R180	1-247-835-00	CARBON	1.5K	5%	1/6W	
R181	1-247-835-00	CARBON	1.5K	5%	1/6W	
R185	1-247-843-00	CARBON	3.3K	5%	1/6W	
R186	1-247-830-00	CARBON	910	5%	1/6W	
R187	1-247-831-00	CARBON	1K	5%	1/6W	
R188	1-247-839-00	CARBON	2.2K	5%	1/6W	
R189	1-247-834-00	CARBON	1.3K	5%	1/6W	
R190	1-247-834-00	CARBON	1.3K	5%	1/6W	
R191	1-247-831-00	CARBON	1K	5%	1/6W	
R192	1-247-831-00	CARBON	1K	5%	1/6W	
R193	1-247-855-00	CARBON	10K	5%	1/6W	
R194	1-247-819-00	CARBON	330	5%	1/6W	
R195	1-247-812-00	CARBON	160	5%	1/6W	
R196	1-247-863-00	CARBON	22K	5%	1/6W	
R197	1-247-863-00	CARBON	22K	5%	1/6W	
R198	1-247-829-00	CARBON	820	5%	1/6W	
R199	1-247-821-00	CARBON	390	5%	1/6W	
R200	1-247-839-00	CARBON	2.2K	5%	1/6W	
R201	1-247-837-00	CARBON	1.8K	5%	1/6W	
R202	1-247-831-00	CARBON	1K	5%	1/6W	
R203	1-247-815-00	CARBON	220	5%	1/6W	
R204	1-247-811-00	CARBON	150	5%	1/6W	
R205	1-247-811-00	CARBON	150	5%	1/6W	
R206	1-247-834-00	CARBON	1.3K	5%	1/6W	
R207	1-247-874-00	CARBON	62K	5%	1/6W	
R208	1-247-874-00	CARBON	62K	5%	1/6W	
R209	1-247-833-00	CARBON	1.2K	5%	1/6W	
R210	1-247-824-00	CARBON	510	5%	1/6W	
R211	1-247-831-00	CARBON	1K	5%	1/6W	
R212	1-247-824-00	CARBON	510	5%	1/6W	
R213	1-247-829-00	CARBON	820	5%	1/6W	
R214	1-247-831-00	CARBON	1K	5%	1/6W	

Ref.No	Part No.	Description				Remark
R215	1-247-831-00	CARBON	1K	5%	1/6W	
R216	1-247-832-00	CARBON	1.1K	5%	1/6W	
R217	1-247-831-00	CARBON	1K	5%	1/6W	
R218	1-247-831-00	CARBON	1K	5%	1/6W	
R219	1-247-866-00	CARBON	30K	5%	1/6W	
R220	1-247-874-00	CARBON	62K	5%	1/6W	
R221	1-247-849-00	CARBON	5.6K	5%	1/6W	
R222	1-247-837-00	CARBON	1.8K	5%	1/6W	
R223	1-247-837-00	CARBON	1.8K	5%	1/6W	
R231	1-247-867-00	CARBON	33K	5%	1/6W	
R235	1-247-831-00	CARBON	1K	5%	1/6W	
R236	1-247-853-00	CARBON	8.2K	5%	1/6W	
R238	1-247-858-00	CARBON	13K	5%	1/6W	
R239	1-247-855-00	CARBON	10K	5%	1/6W	
R240	1-247-839-00	CARBON	2.2K	5%	1/6W	
R241	1-247-804-00	CARBON	75	5%	1/6W	
R242	1-247-879-00	CARBON	100K	5%	1/6W	
R243	1-247-855-00	CARBON	10K	5%	1/6W	
R244	1-247-851-00	CARBON	6.8K	5%	1/6W	
R245	1-247-879-00	CARBON	100K	5%	1/6W	
R246	1-247-879-00	CARBON	100K	5%	1/6W	
R247	1-247-871-00	CARBON	47K	5%	1/6W	
R248	1-247-818-00	CARBON	300	5%	1/6W	
R249	1-247-811-00	CARBON	150	5%	1/6W	
R250	1-247-808-00	CARBON	110	5%	1/6W	
R251	1-247-838-00	CARBON	2K	5%	1/6W	
R252	1-247-803-00	CARBON	68	5%	1/6W	
R253	1-247-831-00	CARBON	1K	5%	1/6W	
R254	1-247-855-00	CARBON	10K	5%	1/6W	
R255	1-247-858-00	CARBON	13K	5%	1/6W	
R256	1-247-843-00	CARBON	3.3K	5%	1/6W	
R257	1-247-835-00	CARBON	1.5K	5%	1/6W	
R258	1-247-852-00	CARBON	7.5K	5%	1/6W	
R259	1-247-831-00	CARBON	1K	5%	1/6W	
R260	1-247-841-00	CARBON	2.7K	5%	1/6W	
R261	1-247-863-00	CARBON	22K	5%	1/6W	
R262	1-247-859-00	CARBON	15K	5%	1/6W	
R274	1-247-883-00	CARBON	150K	5%	1/6W	
R275	1-247-871-00	CARBON	47K	5%	1/6W	
R276	1-247-849-00	CARBON	5.6K	5%	1/6W	
R277	1-247-855-00	CARBON	10K	5%	1/6W	
R280	1-247-835-00	CARBON	1.5K	5%	1/6W	
R281	1-247-890-00	CARBON	300K	5%	1/6W	
R282	1-247-807-00	CARBON	100	5%	1/6W	
R283	1-247-838-00	CARBON	2K	5%	1/6W	
R284	1-247-877-00	CARBON	82K	5%	1/6W	
R286	1-247-848-00	CARBON	5.1K	5%	1/6W	
R287	1-247-831-00	CARBON	1K	5%	1/6W	
R288	1-247-803-00	CARBON	68	5%	1/6W	
R291	1-247-863-00	CARBON	22K	5%	1/6W	
R292	1-247-875-00	CARBON	68K	5%	1/6W	
R293	1-247-819-00	CARBON	330	5%	1/6W	
R294	1-247-818-00	CARBON	300	5%	1/6W	

When indicating parts by reference number, please include the board name.

Ref.No	Part No.	Description				Remark
R295	1-247-839-00	CARBON	2.2K	5%	1/6W	
R296	1-247-811-00	CARBON	150	5%	1/6W	
R297	1-247-839-00	CARBON	2.2K	5%	1/6W	
R298	1-247-894-00	CARBON	430K	5%	1/6W	
R299	1-247-892-00	CARBON	360K	5%	1/6W	
R300	1-247-818-00	CARBON	300	5%	1/6W	
R301	1-247-855-00	CARBON	10K	5%	1/6W	
R302	1-247-819-00	CARBON	330	5%	1/6W	
R303	1-247-819-00	CARBON	330	5%	1/6W	
R304	1-247-847-00	CARBON	4.7K	5%	1/6W	
R305	1-247-835-00	CARBON	1.5K	5%	1/6W	
R312	1-247-847-00	CARBON	4.7K	5%	1/6W	
R313	1-247-823-00	CARBON	470	5%	1/6W	
R314	1-247-871-00	CARBON	47K	5%	1/6W	
R315	1-247-855-00	CARBON	10K	5%	1/6W	
R320	1-247-878-00	CARBON	91K	5%	1/6W	
R321	1-247-887-00	CARBON	220K	5%	1/6W	
R325	1-247-807-00	CARBON	100	5%	1/6W	
R326	1-247-852-00	CARBON	7.5K	5%	1/6W	
R327	1-247-863-00	CARBON	22K	5%	1/6W	
R328	1-247-848-00	CARBON	5.1K	5%	1/6W	
R331	1-247-852-00	CARBON	7.5K	5%	1/6W	
R342	1-247-807-00	CARBON	100	5%	1/6W	
R345	1-247-867-00	CARBON	33K	5%	1/6W	
R346	1-247-847-00	CARBON	4.7K	5%	1/6W	
R351	1-247-815-00	CARBON	220	5%	1/6W	
R352	1-247-855-00	CARBON	10K	5%	1/6W	
R353	1-247-831-00	CARBON	1K	5%	1/6W	
R354	1-247-815-00	CARBON	220	5%	1/6W	
R355	1-247-840-00	CARBON	2.4K	5%	1/6W	
R356	1-247-840-00	CARBON	2.4K	5%	1/6W	
R357	1-247-829-00	CARBON	820	5%	1/6W	
R401	1-247-810-00	CARBON	130	5%	1/6W	
R402	1-247-810-00	CARBON	130	5%	1/6W	
R403	1-247-867-00	CARBON	33K	5%	1/6W	
R404	1-247-871-00	CARBON	47K	5%	1/6W	
R405	1-247-831-00	CARBON	1K	5%	1/6W	
R406	1-247-832-00	CARBON	1.1K	5%	1/6W	
R407	1-247-832-00	CARBON	1.1K	5%	1/6W	
R408	1-247-849-00	CARBON	5.6K	5%	1/6W	
R409	1-247-831-00	CARBON	1K	5%	1/6W	
R410	1-247-831-00	CARBON	1K	5%	1/6W	
R411	1-247-847-00	CARBON	4.7K	5%	1/6W	
R412	1-247-828-00	CARBON	750	5%	1/6W	
R413	1-247-812-00	CARBON	160	5%	1/6W	
R414	1-247-847-00	CARBON	4.7K	5%	1/6W	
R415	1-247-831-00	CARBON	1K	5%	1/6W	
R416	1-247-846-00	CARBON	4.3K	5%	1/6W	
R510	1-247-824-00	CARBON	510	5%	1/6W	
R511	1-247-867-00	CARBON	33K	5%	1/6W	
R512	1-247-847-00	CARBON	4.7K	5%	1/6W	
R513	1-247-863-00	CARBON	22K	5%	1/6W	
R514	1-247-821-00	CARBON	390	5%	1/6W	
R515	1-247-839-00	CARBON	2.2K	5%	1/6W	
R516	1-247-821-00	CARBON	390	5%	1/6W	
R517	1-247-821-00	CARBON	390	5%	1/6W	
R518	1-247-821-00	CARBON	390	5%	1/6W	
R519	1-247-821-00	CARBON	390	5%	1/6W	
R520	1-247-839-00	CARBON	2.2K	5%	1/6W	
R521	1-247-821-00	CARBON	390	5%	1/6W	
R522	1-247-839-00	CARBON	2.2K	5%	1/6W	
R523	1-247-812-00	CARBON	160	5%	1/6W	

VARIABLE RESISTOR

RV001	1-228-989-00	RES, ADJ, METAL GLAZE 470	
RV002	1-228-748-00	RES, ADJ, CARBON 10K	
RV003	1-228-750-00	RES, ADJ, CARBON 47K	
RV004	1-228-989-00	RES, ADJ, METAL GLAZE 470	
RV005	1-228-750-00	RES, ADJ, CARBON 47K	
RV006	1-228-749-00	RES, ADJ, CARBON 22K	
RV007	1-228-748-00	RES, ADJ, CARBON 10K	
RV008	1-228-745-00	RES, ADJ, CARBON 1K	
RV009	1-228-996-00	RES, ADJ, METAL GLAZE 47K	
RV010	1-228-749-00	RES, ADJ, CARBON 22K	
RV012	1-228-750-00	RES, ADJ, CARBON 47K	
RV013	1-228-750-00	RES, ADJ, CARBON 47K	
RV014	1-228-748-00	RES, ADJ, CARBON 10K	
RV015	1-228-989-00	RES, ADJ, METAL GLAZE 470	
RV016	1-228-745-00	RES, ADJ, CARBON 1K	
RV017	1-228-753-00	RES, ADJ, CARBON 470K	
RV019	1-228-993-00	RES, ADJ, METAL GLAZE 4.7K	
RV020	1-228-745-00	RES, ADJ, CARBON 1K	
RV021	1-228-750-00	RES, ADJ, CARBON 47K	
RV401	1-228-994-00	RES, ADJ, METAL GLAZE 10K	
RV501	1-228-744-00	RES, ADJ, CARBON 470	

COIL

T001	1-426-093-00	COIL, REC C BPT	

CRYSTAL

X001	1-527-345-00	CRYSTAL, OSC	

****

♣:A-6711-528-A	RP-17 BOARD, COMPLETE	
	**********	
♣:3-684-081-01	CASE (A) (MAIN), SHIELD, RP	
♣:3-684-082-02	LID, UPPER, RP SHIELD CASE (A)	
♣:3-684-083-02	LID, BOTTOM, RP SHIELD CASE(A)	
♣:3-684-084-01	CASE (B) (MAIN), SHIELD, RP	
♣:3-684-085-01	LID, UPPER, RP SHIELD CASE (B)	
♣:3-684-086-01	LID, BOTTOM, RP SHIELD CASE(B)	

CAPACITOR

C003	1-101-004-00	CERAMIC	0.01MF	50V

When indicating parts by reference number, please include the board name.

RP-17

Ref.No	Part No.	Description			Remark
C004	1-123-356-00	ELECT	10MF	20%	16V
C005	1-123-379-00	ELECT	0.47MF	20%	50V
C006	1-101-004-00	CERAMIC	0.01MF		50V
C007	1-123-356-00	ELECT	10MF	20%	16V
C008	1-101-004-00	CERAMIC	0.01MF		50V
C012	1-101-004-00	CERAMIC	0.01MF		50V
C013	1-102-820-00	CERAMIC	330PF	5%	50V
C014	1-123-356-00	ELECT	10MF	20%	16V
C017	1-102-973-00	CERAMIC	100PF	5%	50V
C018	1-102-973-00	CERAMIC	100PF	5%	50V
C019	1-102-824-00	CERAMIC	470PF	5%	50V
C020	1-101-004-00	CERAMIC	0.01MF		50V
C021	1-101-880-00	CERAMIC	47PF	5%	50V
C022	1-101-880-00	CERAMIC	47PF	5%	50V
C023	1-123-333-00	ELECT	100MF	20%	16V
C024	1-123-356-00	ELECT	10MF	20%	16V
C025	1-101-004-00	CERAMIC	0.01MF		50V
C026	1-123-379-00	ELECT	0.47MF	20%	50V
C027	1-123-356-00	ELECT	10MF	20%	16V
C028	1-101-004-00	CERAMIC	0.01MF		50V
C029	1-102-521-00	CERAMIC	43PF	5%	50V
C030	1-101-004-00	CERAMIC	0.01MF		50V
C033	1-102-977-00	CERAMIC	200PF	5%	50V
C034	1-123-332-00	ELECT	47MF	20%	16V
C035	1-101-004-00	CERAMIC	0.01MF		50V
C036	1-123-356-00	ELECT	10MF	20%	16V
C037	1-101-004-00	CERAMIC	0.01MF		50V
C038	1-101-006-00	CERAMIC	0.047MF		50V
C039	1-101-006-00	CERAMIC	0.047MF		50V
C040	1-101-004-00	CERAMIC	0.01MF		50V
C041	1-102-960-00	CERAMIC	24PF	5%	50V
C042	1-102-960-00	CERAMIC	24PF	5%	50V
C043	1-123-318-00	ELECT	33MF	20%	16V
C044	1-101-004-00	CERAMIC	0.01MF		50V
C045	1-102-514-00	CERAMIC	22PF	5%	50V
C046	1-101-004-00	CERAMIC	0.01MF		50V
C047	1-101-004-00	CERAMIC	0.01MF		50V
C048	1-101-004-00	CERAMIC	0.01MF		50V
C049	1-101-004-00	CERAMIC	0.01MF		50V
C050	1-101-004-00	CERAMIC	0.01MF		50V
C054	1-101-004-00	CERAMIC	0.01MF		50V
C055	1-101-004-00	CERAMIC	0.01MF		50V
C056	1-161-025-00	CERAMIC	0.1MF	10%	25V
C057	1-123-333-00	ELECT	100MF	20%	16V
C058	1-161-772-00	CERAMIC	0.1MF	10%	25V
C101	1-161-025-00	CERAMIC	0.1MF	10%	25V
C102	1-101-004-00	CERAMIC	0.01MF		50V
C103	1-161-025-00	CERAMIC	0.1MF	10%	25V
C104	1-101-004-00	CERAMIC	0.01MF		50V
C105	1-161-025-00	CERAMIC	0.1MF	10%	25V

Ref.No	Part No.	Description			Remark
C106	1-102-977-00	CERAMIC	200PF	5%	50V
C107	1-123-356-00	ELECT	10MF	20%	16V
C108	1-101-004-00	CERAMIC	0.01MF		50V
C109	1-161-025-00	CERAMIC	0.1MF	10%	25V
C110	1-101-004-00	CERAMIC	0.01MF		50V
C111	1-101-004-00	CERAMIC	0.01MF		50V
C112	1-161-025-00	CERAMIC	0.1MF	10%	25V
C113	1-161-025-00	CERAMIC	0.1MF	10%	25V
C114	1-102-978-00	CERAMIC	220PF	5%	50V
C115	1-101-004-00	CERAMIC	0.01MF		50V
C116	1-161-025-00	CERAMIC	0.1MF	10%	25V
C117	1-161-025-00	CERAMIC	0.1MF	10%	25V
C118	1-123-380-00	ELECT	1MF	20%	50V
C119	1-101-004-00	CERAMIC	0.01MF		50V
C120	1-123-380-00	ELECT	1MF	20%	50V
C121	1-102-531-00	CERAMIC	150PF	5%	50V
C122	1-161-025-00	CERAMIC	0.1MF	10%	25V
C123	1-123-318-00	ELECT	33MF	20%	16V
C124	1-101-004-00	CERAMIC	0.01MF		50V
C125	1-101-004-00	CERAMIC	0.01MF		50V
C126	1-161-025-00	CERAMIC	0.1MF	10%	25V
C127	1-123-318-00	ELECT	33MF	20%	16V
C128	1-101-004-00	CERAMIC	0.01MF		50V
C129	1-101-004-00	CERAMIC	0.01MF		50V
C130	1-161-025-00	CERAMIC	0.1MF	10%	25V
C201	1-123-356-00	ELECT	10MF	20%	16V
C202	1-123-356-00	ELECT	10MF	20%	16V
C203	1-123-356-00	ELECT	10MF	20%	16V
C204	1-123-356-00	ELECT	10MF	20%	16V
C205	1-123-356-00	ELECT	10MF	20%	16V
C206	1-123-380-00	ELECT	1MF	20%	50V
C207	1-123-318-00	ELECT	33MF	20%	16V
C208	1-123-356-00	ELECT	10MF	20%	16V
C209	1-123-356-00	ELECT	10MF	20%	16V
C210	1-102-121-00	CERAMIC	0.0022MF	10%	50V
C211	1-123-321-00	ELECT	220MF	20%	16V
C301	1-101-004-00	CERAMIC	0.01MF		50V
C302	1-123-330-00	ELECT	22MF	20%	16V
C304	1-123-356-00	ELECT	10MF	20%	16V
C305	1-161-025-00	CERAMIC	0.1MF	10%	25V
C306	1-101-004-00	CERAMIC	0.01MF		50V
C307	1-123-356-00	ELECT	10MF	20%	16V
C308	1-123-328-00	ELECT	4.7MF	20%	25V
C309	1-123-328-00	ELECT	4.7MF	20%	25V

CONNECTOR

CN001 ♣:	1-564-031-00	PIN, CONNECTOR 6P
CN002 ♣:	1-564-030-00	PIN, CONNECTOR 5P
CN003 ♣:	1-564-028-00	PIN, CONNECTOR 3P
CN101 ♣:	1-564-031-00	PIN, CONNECTOR 6P
CN102 ♣:	1-564-037-11	PIN, CONNECTOR 12P
CN103 ♣:	1-564-030-21	PIN, CONNECTOR 5P
CN202 ♣:	1-564-030-00	PIN, CONNECTOR 5P

When indicating parts by reference number, please include the board name.

Ref.No	Part No.	Description	Remark
		DIODE	
D001	8-719-901-33	DIODE 1SS133	
D002	8-719-901-33	DIODE 1SS133	
D003	=>8-719-911-19	DIODE 1SS119	
D004	=>8-719-911-19	DIODE 1SS119	
D101	8-719-911-19	DIODE 1SS119	
D102	8-719-911-19	DIODE 1SS119	
D103	8-719-911-19	DIODE 1SS119	
D104	8-719-911-19	DIODE 1SS119	
D105	8-719-911-19	DIODE 1SS119	
D106	8-719-911-19	DIODE 1SS119	
D201	8-719-911-19	DIODE 1SS119	
D202	8-719-911-19	DIODE 1SS119	
D203	8-719-911-19	DIODE 1SS119	
D301	8-719-911-19	DIODE 1SS119	
		IC	
IC001	8-752-004-50	IC CX20045	
IC002	8-759-200-60	IC TA7060AP	
IC201	8-759-145-58	IC UPC4558C	
IC301	8-759-145-58	IC UPC4558C	
		COIL	
L001	1-408-876-00	MICRO INDUCTOR 0.18UH	
L002	1-408-427-00	MICRO INDUCTOR 330UH	
L003	1-408-421-00	MICRO INDUCTOR 100UH	
L004	1-408-423-00	MICRO INDUCTOR 150UH	
L006	1-408-421-00	MICRO INDUCTOR 100UH	
L009	1-408-422-00	MICRO INDUCTOR 120UH	
L010	1-408-411-00	MICRO INDUCTOR 15UH	
L011	1-408-411-00	MICRO INDUCTOR 15UH	
L012	1-408-878-00	MICRO INDUCTOR 0.33UH	
L013	1-408-427-00	MICRO INDUCTOR 330UH	
L014	1-408-421-00	MICRO INDUCTOR 100UH	
L015	1-408-408-00	MICRO INDUCTOR 8.2UH	
L016	1-408-421-00	MICRO INDUCTOR 100UH	
L017	1-408-415-00	MICRO INDUCTOR 33UH	
L101	1-408-405-00	MICRO INDUCTOR 4.7UH	
L102	1-408-421-00	MICRO INDUCTOR 100UH	
L103	1-408-405-00	MICRO INDUCTOR 4.7UH	
L104	1-408-421-00	MICRO INDUCTOR 100UH	
L105	1-408-421-00	MICRO INDUCTOR 100UH	
		TRANSISTOR	
Q001	=>8-729-245-83	TRANSISTOR 2SC2458	
Q002	=>8-729-245-83	TRANSISTOR 2SC2458	
Q003	=>8-729-177-43	TRANSISTOR 2SD774	
Q004	=>8-729-204-83	TRANSISTOR 2SA1048-GR	
Q005	=>8-729-204-83	TRANSISTOR 2SA1048-GR	
Q006	=>8-729-245-83	TRANSISTOR 2SC2458	
Q101	=>8-729-245-83	TRANSISTOR 2SC2458	

Ref.No	Part No.	Description	Remark
Q102	8-729-800-42	TRANSISTOR 2SK152	
Q103	=>8-729-245-83	TRANSISTOR 2SC2458	
Q104	8-729-384-46	TRANSISTOR 2SA844-C	
Q105	8-729-603-50	TRANSISTOR 2SC403SP	
Q106	=>8-729-245-83	TRANSISTOR 2SC2458	
Q107	8-729-800-42	TRANSISTOR 2SK152	
Q108	8-729-384-46	TRANSISTOR 2SA844-C	
Q109	8-729-603-50	TRANSISTOR 2SC403SP	
Q110	=>8-729-245-83	TRANSISTOR 2SC2458	
Q111	8-729-603-50	TRANSISTOR 2SC403SP	
Q112	8-729-384-46	TRANSISTOR 2SA844-C	
Q113	8-729-113-33	TRANSISTOR 2SB733-4	
Q114	8-729-603-50	TRANSISTOR 2SC403SP	
Q115	8-729-603-50	TRANSISTOR 2SC403SP	
Q201	=>8-729-245-83	TRANSISTOR 2SC2458	
Q301	8-729-173-37	TRANSISTOR 2SA733-P	
Q302	=>8-729-245-83	TRANSISTOR 2SC2458	
		RESISTOR	
R001	1-247-831-00	CARBON 1K 5% 1/6W	
R002	1-247-816-00	CARBON 240 5% 1/6W	
R004	1-247-857-00	CARBON 12K 5% 1/6W	
R009	1-247-832-00	CARBON 1.1K 5% 1/6W	
R010	1-247-829-00	CARBON 820 5% 1/6W	
R012	1-247-831-00	CARBON 1K 5% 1/6W	
R013	1-247-831-00	CARBON 1K 5% 1/6W	
R015	1-247-831-00	CARBON 1K 5% 1/6W	
R016	1-247-879-00	CARBON 100K 5% 1/6W	
R017	1-247-835-00	CARBON 1.5K 5% 1/6W	
R020	1-247-816-00	CARBON 240 5% 1/6W	
R022	1-247-866-00	CARBON 30K 5% 1/6W	
R023	1-247-862-00	CARBON 20K 5% 1/6W	
R024	1-247-824-00	CARBON 510 5% 1/6W	
R025	1-247-824-00	CARBON 510 5% 1/6W	
R026	1-247-823-00	CARBON 470 5% 1/6W	
R028	1-247-824-00	CARBON 510 5% 1/6W	
R036	1-247-836-00	CARBON 1.6K 5% 1/6W	
R037	1-247-864-00	CARBON 24K 5% 1/6W	
R038	1-247-866-00	CARBON 30K 5% 1/6W	
R039	⚠ 1-212-857-00	FUSIBLE 10 5% 1/4W F	
R040	1-247-831-00	CARBON 1K 5% 1/6W	
R042	1-247-831-00	CARBON 1K 5% 1/6W	
R043	1-247-829-00	CARBON 820 5% 1/6W	
R044	1-247-855-00	CARBON 10K 5% 1/6W	
R045	1-247-807-00	CARBON 100 5% 1/6W	
R048	1-247-819-00	CARBON 330 5% 1/6W	
R049	1-247-819-00	CARBON 330 5% 1/6W	
R050	1-247-831-00	CARBON 1K 5% 1/6W	
R051	1-247-857-00	CARBON 12K 5% 1/6W	
R052	1-247-858-00	CARBON 13K 5% 1/6W	
R053	1-247-831-00	CARBON 1K 5% 1/6W	
R054	1-247-829-00	CARBON 820 5% 1/6W	
R055	1-247-825-00	CARBON 560 5% 1/6W	

NOTE:

The components identified by shading and mark ⚠ are critical for safety. Replace only with part number specified.

When indicating parts by reference number, please include the board name.

RP-17 AF-3

Ref.No	Part No.	Description				Remark
R056	1-247-863-00	CARBON	22K	5%	1/6W	
R057	1-247-863-00	CARBON	22K	5%	1/6W	
R101	1-247-849-00	CARBON	5.6K	5%	1/6W	
R102	1-247-831-00	CARBON	1K	5%	1/6W	
R103	1-247-855-00	CARBON	10K	5%	1/6W	
R104	1-247-855-00	CARBON	10K	5%	1/6W	
R105	1-247-821-00	CARBON	390	5%	1/6W	
R106	1-247-818-00	CARBON	300	5%	1/6W	
R107	1-247-810-00	CARBON	130	5%	1/6W	
R109 ⚠	1-212-857-00	FUSIBLE	10	5%	1/4W	F
R110	1-247-831-00	CARBON	1K	5%	1/6W	
R111	1-247-807-00	CARBON	100	5%	1/6W	
R112	1-247-807-00	CARBON	100	5%	1/6W	
R113	1-247-849-00	CARBON	5.6K	5%	1/6W	
R114	1-247-818-00	CARBON	300	5%	1/6W	
R115	1-247-799-00	CARBON	47	5%	1/6W	
R116	1-247-827-00	CARBON	680	5%	1/6W	
R117	1-247-821-00	CARBON	390	5%	1/6W	
R118	1-247-807-00	CARBON	100	5%	1/6W	
R119	1-247-855-00	CARBON	10K	5%	1/6W	
R120	1-247-855-00	CARBON	10K	5%	1/6W	
R122	1-247-831-00	CARBON	1K	5%	1/6W	
R123	1-247-807-00	CARBON	100	5%	1/6W	
R124	1-247-839-00	CARBON	2.2K	5%	1/6W	
R125	1-247-869-00	CARBON	39K	5%	1/6W	
R126	1-247-831-00	CARBON	1K	5%	1/6W	
R127	1-247-853-00	CARBON	8.2K	5%	1/6W	
R128	1-247-855-00	CARBON	10K	5%	1/6W	
R129	1-247-820-00	CARBON	360	5%	1/6W	
R130	1-247-819-00	CARBON	330	5%	1/6W	
R131	1-247-799-00	CARBON	47	5%	1/6W	
R132 ⚠	1-211-608-00	CARBON	56	5%	1/2W	F
R133	1-247-823-00	CARBON	470	5%	1/6W	
R134	1-247-826-00	CARBON	620	5%	1/6W	
R135	1-246-417-00	CARBON	4.7	5%	1/4W	
R136	1-247-807-00	CARBON	100	5%	1/6W	
R137	1-247-857-00	CARBON	12K	5%	1/6W	
R138	1-247-827-00	CARBON	680	5%	1/6W	
R139	1-247-807-00	CARBON	100	5%	1/6W	
R140	1-247-807-00	CARBON	100	5%	1/6W	
R141	1-247-831-00	CARBON	1K	5%	1/6W	
R142	1-247-849-00	CARBON	5.6K	5%	1/6W	
R143	1-247-857-00	CARBON	12K	5%	1/6W	
R144	1-247-871-00	CARBON	47K	5%	1/6W	
R145	1-247-850-00	CARBON	6.2K	5%	1/6W	
R146	1-247-842-00	CARBON	3K	5%	1/6W	
R147	1-247-857-00	CARBON	12K	5%	1/6W	
R148	1-247-871-00	CARBON	47K	5%	1/6W	
R149	1-247-850-00	CARBON	6.2K	5%	1/6W	
R150	1-247-842-00	CARBON	3K	5%	1/6W	
R201	1-247-855-00	CARBON	10K	5%	1/6W	
R202	1-247-879-00	CARBON	100K	5%	1/6W	
R203	1-247-879-00	CARBON	100K	5%	1/6W	
R204	1-247-886-00	CARBON	200K	5%	1/6W	
R205	1-247-873-00	CARBON	56K	5%	1/6W	
R206	1-247-855-00	CARBON	10K	5%	1/6W	
R207	1-247-883-00	CARBON	150K	5%	1/6W	
R208	1-247-866-00	CARBON	30K	5%	1/6W	
R209	1-247-831-00	CARBON	1K	5%	1/6W	
R210	1-247-879-00	CARBON	100K	5%	1/6W	
R211	1-247-871-00	CARBON	47K	5%	1/6W	
R212	1-247-859-00	CARBON	15K	5%	1/6W	
R213 ⚠	1-212-857-00	FUSIBLE	10	5%	1/4W	F
R301	1-247-807-00	CARBON	100	5%	1/6W	
R302	1-247-879-00	CARBON	100K	5%	1/6W	
R303	1-247-855-00	CARBON	10K	5%	1/6W	
R304	1-247-863-00	CARBON	22K	5%	1/6W	
R305	1-247-843-00	CARBON	3.3K	5%	1/6W	
R306	1-247-859-00	CARBON	15K	5%	1/6W	
R307	1-247-819-00	CARBON	330	5%	1/6W	
R308	1-247-848-00	CARBON	5.1K	5%	1/6W	
R309	1-247-848-00	CARBON	5.1K	5%	1/6W	
R310	1-247-848-00	CARBON	5.1K	5%	1/6W	
R311	1-247-896-00	CARBON	510K	5%	1/6W	
R312	1-247-848-00	CARBON	5.1K	5%	1/6W	
R313	1-247-848-00	CARBON	5.1K	5%	1/6W	
R314	1-247-896-00	CARBON	510K	5%	1/6W	

VARIABLE RESISTOR

RV001	1-228-991-00	RES, ADJ, METAL GLAZE 2.2K
RV002	1-228-991-00	RES, ADJ, METAL GLAZE 2.2K
RV003	1-228-745-00	RES, ADJ, CARBON 1K
RV004	1-228-991-00	RES, ADJ, METAL GLAZE 2.2K
RV101	1-228-990-11	RES, ADJ, METAL GLAZE 1K
RV102	1-228-990-11	RES, ADJ, METAL GLAZE 1K
RV301	1-228-991-00	RES, ADJ, METAL GLAZE 2.2K

TRANSFORMER

T101	1-427-546-11	TRANSFORMER, I/O
T102	1-427-546-11	TRANSFORMER, I/O

THERMISTOR

TH203	1-806-718-11	THER STOR S-10K

****

♣:A-6713-200-A	AF-3 BOARD, COMPLETE	
	**********	
♣:3-684-072-01	LID, BOTTOM, AF SHIELD CASE(S)	
♣:3-684-087-01	CASE (S) (MAIN), SHIELD, AF	

NOTE:

The components identified by shading and mark ⚠ are critical for safety. Replace only with part number specified.

When indicating parts by reference number, please include the board name.

AF-3

Ref.No	Part No.	Description			Remark
		B.P.F			
BPF001	1-235-367-11	B.P.F			
BPF002	1-235-367-11	B.P.F			
BPF003	1-235-366-11	B.P.F			
BPF004	1-235-366-11	B.P.F			
		CAPACITOR			
C001	1-123-356-00	ELECT	10MF	20%	16V
C002	1-161-025-00	CERAMIC	0.1MF	10%	25V
C003	1-161-025-00	CERAMIC	0.1MF	10%	25V
C004	1-161-025-00	CERAMIC	0.1MF	10%	25V
C006	1-161-025-00	CERAMIC	0.1MF	10%	25V
C007	1-123-332-00	ELECT	47MF	20%	16V
C008	1-161-025-00	CERAMIC	0.1MF	10%	25V
C010	1-123-306-00	ELECT	47MF	20%	10V
C011	1-123-306-00	ELECT	47MF	20%	10V
C012	1-161-025-00	CERAMIC	0.1MF	10%	25V
C013	1-123-294-00	ELECT	47MF	20%	6.3V
C014	1-161-025-00	CERAMIC	0.1MF	10%	25V
C015	1-161-025-00	CERAMIC	0.1MF	10%	25V
C016	1-102-519-00	CERAMIC	36PF	5%	50V
C017	1-161-025-00	CERAMIC	0.1MF	10%	25V
C018	1-123-332-00	ELECT	47MF	20%	16V
C020	1-161-025-00	CERAMIC	0.1MF	10%	25V
C021	1-161-025-00	CERAMIC	0.1MF	10%	25V
C023	1-123-356-00	ELECT	10MF	20%	16V
C025	1-102-973-00	CERAMIC	100PF	5%	50V
C026	1-101-884-00	CERAMIC	56PF	5%	50V
C027	1-161-025-00	CERAMIC	0.1MF	10%	25V
C028	1-123-353-00	ELECT	2.2MF	20%	50V
C030	1-123-353-00	ELECT	2.2MF	20%	50V
C031	1-123-332-00	ELECT	47MF	20%	16V
C032	1-161-025-00	CERAMIC	0.1MF	10%	25V
C033	1-161-025-00	CERAMIC	0.1MF	10%	25V
C034	1-102-519-00	CERAMIC	36PF	5%	50V
C035	1-161-025-00	CERAMIC	0.1MF	10%	25V
C036	1-161-025-00	CERAMIC	0.1MF	10%	25V
C038	1-102-973-00	CERAMIC	100PF	5%	50V
C039	1-101-884-00	CERAMIC	56PF	5%	50V
C041	1-123-356-00	ELECT	10MF	20%	16V
C042	1-123-333-00	ELECT	100MF	20%	16V
C046	1-161-025-00	CERAMIC	0.1MF	10%	25V
C048	1-123-333-00	ELECT	100MF	20%	16V
C050	1-161-025-00	CERAMIC	0.1MF	10%	25V
C051	1-161-025-00	CERAMIC	0.1MF	10%	25V
C052	1-161-025-00	CERAMIC	0.1MF	10%	25V
C053	1-161-025-00	CERAMIC	0.1MF	10%	25V
C054	1-102-822-00	CERAMIC	390PF	5%	50V
C055	1-161-025-00	CERAMIC	0.1MF	10%	25V
C057	1-102-973-00	CERAMIC	100PF	5%	50V
C058	1-101-884-00	CERAMIC	56PF	5%	50V
C059	1-123-356-00	ELECT	10MF	20%	16V
C060	1-123-353-00	ELECT	2.2MF	20%	50V
C062	1-123-353-00	ELECT	2.2MF	20%	50V
C063	1-161-025-00	CERAMIC	0.1MF	10%	25V
C064	1-161-025-00	CERAMIC	0.1MF	10%	25V
C065	1-161-025-00	CERAMIC	0.1MF	10%	25V
C069	1-123-332-00	ELECT	47MF	20%	16V
C070	1-161-025-00	CERAMIC	0.1MF	10%	25V
C071	1-161-025-00	CERAMIC	0.1MF	10%	25V
C072	1-102-822-00	CERAMIC	390PF	5%	50V
C073	1-161-025-00	CERAMIC	0.1MF	10%	25V
C075	1-102-973-00	CERAMIC	100PF	5%	50V
C076	1-101-884-00	CERAMIC	56PF	5%	50V
C078	1-123-333-00	ELECT	100MF	20%	16V
C080	1-161-025-00	CERAMIC	0.1MF	10%	25V
C081	1-108-561-00	MYLAR	0.0018MF	5%	50V
C082	1-108-565-00	MYLAR	0.0027MF	5%	50V
C083	1-108-569-00	MYLAR	0.0039MF	5%	50V
C084	1-123-356-00	ELECT	10MF	20%	16V
C086	1-123-307-00	ELECT	0.1MF	10%	25V
C087	1-161-031-00	CERAMIC	0.01MF	10%	25V
C088	1-123-307-00	CERAMIC	100MF	20%	10V
C089	1-123-332-00	ELECT	47MF	20%	16V
C090	1-123-332-00	ELECT	47MF	20%	16V
C091	1-123-356-00	ELECT	10MF	20%	16V
C092	1-102-958-00	CERAMIC	20PF	5%	50V
C093	1-130-485-00	MYLAR	0.015MF	5%	50V
C095	1-130-485-00	MYLAR	0.015MF	5%	50V
C096	1-130-494-11	MYLAR	0.082MF	5%	50V
C098	1-130-475-00	MYLAR	0.0022MF	5%	50V
C099	1-102-936-00	CERAMIC	3PF	0.25PF	50V
C100	1-130-469-00	MYLAR	680PF	5%	50V
C101	1-108-590-00	MYLAR	0.03MF	5%	50V
C102	1-131-383-00	TANTALUM	10MF	10%	6.3V
C103	1-131-347-00	TANTALUM	1MF	20%	16V
C105	1-123-307-00	ELECT	100MF	20%	10V
C106	1-161-013-00	CERAMIC	0.01MF	10%	25V
C107	1-130-497-00	MYLAR	0.15MF	5%	50V
C109	1-108-569-00	MYLAR	0.0039MF	5%	50V
C110	1-108-565-00	MYLAR	0.0027MF	5%	50V
C111	1-108-561-00	MYLAR	0.0018MF	5%	50V
C115	1-123-356-00	ELECT	10MF	20%	16V
C116	1-123-307-00	ELECT	100MF	20%	10V
C117	1-123-332-00	ELECT	47MF	20%	16V
C118	1-123-332-00	ELECT	47MF	20%	16V
C119	1-102-958-00	CERAMIC	20PF	5%	50V
C120	1-130-485-00	MYLAR	0.015MF	5%	50V
C121	1-102-936-00	CERAMIC	3PF	0.25PF	50V
C122	1-130-469-00	MYLAR	680PF	5%	50V
C123	1-102-936-00	CERAMIC	3PF	0.25PF	50V
C124	1-130-497-00	MYLAR	0.15MF	5%	50V
C125	1-131-383-00	TANTALUM	10MF	10%	6.3V
C126	1-131-347-00	TANTALUM	1MF	20%	16V
C127	1-108-590-00	MYLAR	0.03MF	5%	50V

When indicating parts by reference number, please include the board name.

AF-3

Ref.No	Part No.	Description			Remark
C128	1-130-475-00	MYLAR	0.0022MF	5%	50V
C130	1-130-494-11	MYLAR	0.082MF	5%	50V
C131	1-130-485-00	MYLAR	0.015MF	5%	50V
C132	1-123-356-00	ELECT	10MF	20%	16V
C133	1-161-013-00	CERAMIC	0.01MF	10%	25V
C134	1-123-330-00	ELECT	22MF	20%	16V
C143	1-123-332-00	ELECT	47MF	20%	16V
C144	1-123-330-00	ELECT	22MF	20%	16V
C146	1-123-332-00	ELECT	47MF	20%	16V
C147	1-123-330-00	ELECT	22MF	20%	16V
C150	1-123-332-00	ELECT	47MF	20%	16V
C151	1-123-381-00	ELECT	2.2MF	20%	50V
C152	1-102-973-00	CERAMIC	100PF	5%	50V
C153	1-123-332-00	ELECT	47MF	20%	16V
C154	1-123-381-00	ELECT	2.2MF	20%	50V
C155	1-102-973-00	CERAMIC	100PF	5%	50V
C156	1-123-330-00	ELECT	22MF	20%	16V
C157	1-123-330-00	ELECT	22MF	20%	16V
C158	1-123-330-00	ELECT	22MF	20%	16V
C159	1-123-318-00	ELECT	33MF	20%	16V
C160	1-123-332-00	ELECT	47MF	20%	16V
C161	1-123-330-00	ELECT	22MF	20%	16V
C162	1-123-318-00	ELECT	33MF	20%	16V
C163	1-123-356-00	ELECT	10MF	20%	16V
C164	1-123-356-00	ELECT	10MF	20%	16V
C165	1-123-330-00	ELECT	22MF	20%	16V
C166	1-123-356-00	ELECT	10MF	20%	16V
C167	1-123-380-00	ELECT	1MF	20%	50V
C168	1-123-356-00	ELECT	10MF	20%	16V
C169	1-123-330-00	ELECT	22MF	20%	16V
C170	1-123-380-00	ELECT	1MF	20%	50V
C171	1-161-025-00	CERAMIC	0.1MF	10%	25V
C173	1-161-013-00	CERAMIC	0.01MF	10%	25V
C175	1-123-332-00	ELECT	47MF	20%	16V
C176	1-102-976-00	CERAMIC	180PF	5%	50V
C177	1-161-013-00	CERAMIC	0.01MF	10%	25V
C178	1-102-522-00	CERAMIC	51PF	5%	50V
C179	1-102-978-00	CERAMIC	220PF	5%	50V
C180	1-102-978-00	CERAMIC	220PF	5%	50V
C181	1-161-013-00	CERAMIC	0.01MF	10%	25V
C182	1-123-332-00	ELECT	47MF	20%	16V
C183	1-123-332-00	ELECT	47MF	20%	16V
C184	1-102-529-00	CERAMIC	100PF	5%	50V
C185	1-123-332-00	ELECT	47MF	20%	16V
C186	1-123-332-00	ELECT	47MF	20%	16V
C187	1-161-025-00	CERAMIC	0.1MF	10%	25V
C189	1-161-025-00	CERAMIC	0.1MF	10%	25V
C190	1-123-332-00	ELECT	47MF	20%	16V
C191	1-161-025-00	CERAMIC	0.1MF	10%	25V
C192	1-123-332-00	ELECT	47MF	20%	16V
C193	1-102-529-00	CERAMIC	100PF	5%	50V
C194	1-123-332-00	ELECT	47MF	20%	16V
C195	1-123-332-00	ELECT	47MF	20%	16V

Ref.No	Part No.	Description			Remark
C196	1-123-332-00	ELECT	47MF	20%	16V
C197	1-102-625-61	CERAMIC	100PF	5%	50V
C198	1-161-013-00	CERAMIC	0.01MF	10%	25V
C199	1-102-517-00	CERAMIC	30PF	5%	50V
C200	1-102-531-00	CERAMIC	150PF	5%	50V
C201	1-102-531-00	CERAMIC	150PF	5%	50V
C202	1-161-013-00	CERAMIC	0.01MF	10%	25V
C203	1-161-013-00	CERAMIC	0.01MF	10%	25V
C208	1-161-025-00	CERAMIC	0.1MF	10%	25V
C209	1-123-356-00	ELECT	10MF	20%	16V
C211	1-123-332-00	ELECT	47MF	20%	16V
C213	1-123-332-00	ELECT	47MF	20%	16V
C216	1-123-381-00	ELECT	2.2MF	20%	50V
C217	1-123-381-00	ELECT	2.2MF	20%	50V
C221	1-123-330-00	ELECT	22MF	20%	16V
C222	1-123-330-00	ELECT	22MF	20%	16V
C223	1-102-936-00	CERAMIC	3PF	0.25PF	50V
C224	1-123-380-00	ELECT	1MF	20%	50V
C225	1-161-013-00	CERAMIC	0.01MF	10%	25V
C226	1-161-013-00	CERAMIC	0.01MF	10%	25V
C227	1-161-013-00	CERAMIC	0.01MF	10%	25V
C229	1-130-471-00	MYLAR	0.001MF	5%	50V
C232	1-130-471-00	MYLAR	0.001MF	5%	50V
C235	1-161-013-00	CERAMIC	0.01MF	10%	25V
C236	1-130-491-00	MYLAR	0.047MF	5%	50V
C237	1-130-491-00	MYLAR	0.047MF	5%	50V
C238	1-123-330-00	ELECT	22MF	20%	16V
C240	1-161-025-00	CERAMIC	0.1MF	10%	25V
C241	1-123-356-00	ELECT	10MF	20%	16V
C501	1-124-233-00	ELECT	10MF	20%	16V
C701	1-123-356-00	ELECT	10MF	20%	16V
C702	1-123-356-00	ELECT	10MF	20%	16V
C704	1-123-322-00	ELECT	330MF	20%	16V
C706	1-124-231-00	ELECT	4.7MF	20%	16V
C709	1-123-381-00	ELECT	2.2MF	20%	50V
C710	1-130-469-00	MYLAR	680PF	5%	50V
C711	1-130-469-00	MYLAR	680PF	5%	50V
C712	1-123-332-00	ELECT	47MF	20%	16V
C713	1-123-332-00	ELECT	47MF	20%	16V
C714	1-130-469-00	MYLAR	680PF	5%	50V
C715	1-130-469-00	MYLAR	680PF	5%	50V
C722	1-124-231-00	ELECT	4.7MF	20%	16V
C724	1-123-380-00	ELECT	1MF	20%	50V
C725	1-123-380-00	ELECT	1MF	20%	50V
C726	1-161-039-00	CERAMIC	0.001MF	10%	25V
C727	1-102-824-00	CERAMIC	470PF	5%	50V
C728	1-102-824-00	CERAMIC	470PF	5%	50V
C730	1-161-013-00	CERAMIC	0.01MF	10%	25V
C731	1-123-332-00	ELECT	47MF	20%	16V
C732	1-123-332-00	ELECT	47MF	20%	16V
C733	1-161-013-00	CERAMIC	0.01MF	10%	25V
C734	1-124-168-00	ELECT	100MF	20%	16V
C735	1-123-353-00	ELECT	2.2MF	20%	50V

When indicating parts by reference number, please include the board name.

Ref.No	Part No.	Description			Remark
C736	1-123-353-00	ELECT	2.2MF	20%	50V
C737	1-161-017-00	CERAMIC	0.022MF	10%	25V
C738	1-123-356-00	ELECT	10MF	20%	16V
C739	1-161-019-00	CERAMIC	0.033MF	10%	25V
C740	1-123-307-00	ELECT	100MF	20%	10V
		CONNECTOR			
CN001	1-560-892-00	PIN, CONNECTOR 4P			
CN002	1-560-891-00	PIN, CONNECTOR 3P			
CN003	1-560-898-00	PIN, CONNECTOR 10P			
CN004	1-560-896-00	PIN, CONNECTOR 8P			
CN005	1-560-893-00	PIN, CONNECTOR 5P			
CN006	1-560-892-00	PIN, CONNECTOR 4P			
CN007	1-560-892-00	PIN, CONNECTOR 4P			
CN008	1-560-897-00	PIN, CONNECTOR 9P			
CN009	1-560-891-00	PIN, CONNECTOR 3P			
CN011	1-560-900-00	PIN, CONNECTOR 12P			
CN012	1-560-890-00	PIN, CONNECTOR 2P			
		DIODE			
D007	8-719-911-19	DIODE 1SS119			
D008	8-719-911-19	DIODE 1SS119			
D011	8-719-000-12	DIODE MC931			
D013	8-719-000-12	DIODE MC931			
D017	=>8-719-911-19	DIODE 1SS119			
D019	=>8-719-911-19	DIODE 1SS119			
D025	8-719-162-07	DIODE RD6.2E-B			
D027	=>8-719-911-19	DIODE 1SS119			
D504	8-719-911-19	DIODE 1SS119			
D505	8-719-156-07	DIODE RD5.6E-B			
D508	8-719-162-07	DIODE RD6.2E-B			
D509	8-719-812-33	DIODE TLG123A			
D510	8-719-812-33	DIODE TLG123A			
D511	8-719-812-33	DIODE TLG123A			
D512	8-719-812-33	DIODE TLG123A			
D514	8-719-911-19	DIODE 1SS119			
D515	8-719-911-19	DIODE 1SS119			
D516	8-719-911-19	DIODE 1SS119			
D517	8-719-911-19	DIODE 1SS119			
D521	8-719-911-19	DIODE 1SS119			
D522	8-719-911-19	DIODE 1SS119			
D523	8-719-911-19	DIODE 1SS119			
D524	8-719-812-33	DIODE TLG123A			
D525	8-719-175-07	DIODE RD7.5E-B			
D526	8-719-175-07	DIODE RD7.5E-B			
D527	8-719-911-19	DIODE 1SS119			
D528	8-719-911-19	DIODE 1SS119			
D529	8-719-911-19	DIODE 1SS119			
D530	8-719-911-19	DIODE 1SS119			
D531	8-719-911-19	DIODE 1SS119			
		IC			
IC001	8-759-324-12	IC HA12412			

Ref.No	Part No.	Description	Remark
IC002	8-759-324-12	IC HA12412	
IC003	8-759-101-67	IC UPC1167C2	
IC004	8-759-101-67	IC UPC1167C2	
IC005	8-759-103-93	IC UPC393C	
IC006	8-759-990-82	IC TL082CP	
IC007	8-759-990-82	IC TL082CP	
IC008	8-759-240-66	IC TC4066BP	
IC009	8-759-240-66	IC TC4066BP	
IC010	8-759-400-04	IC AN6120	
IC011	8-759-400-04	IC AN6120	
IC012	8-752-009-70	IC CX20097	
IC013	8-759-700-62	IC NJM4562D	
IC014	8-759-240-52	IC TC4052BP	
IC015	8-759-700-62	IC NJM4562D	
IC016	8-752-006-10	IC CX20061	
IC017	8-752-006-10	IC CX20061	
IC018	8-759-240-93	IC TC4093BP	
IC019	8-759-240-01	IC TC4001BP	
IC020	8-759-910-68	IC MB88201-152G	
		COIL	
L001	1-408-421-00	MICRO INDUCTOR 100UH	
L002	1-408-413-00	MICRO INDUCTOR 22UH	
L003	1-410-079-11	COIL, PHASE SIFT 33UH	
L004	1-410-079-11	COIL, PHASE SIFT 33UH	
L005	1-410-079-11	COIL, PHASE SIFT 33UH	
L007	1-408-415-00	MICRO INDUCTOR 33UH	
L008	1-408-418-00	MICRO INDUCTOR 56UH	
L010	1-408-413-00	MICRO INDUCTOR 22UH	
L011	1-408-416-00	MICRO INDUCTOR 39UH	
L012	1-410-079-11	COIL, PHASE SIFT 33UH	
L013	1-408-413-00	MICRO INDUCTOR 22UH	
L014	1-408-413-00	MICRO INDUCTOR 22UH	
L015	1-408-413-00	MICRO INDUCTOR 22UH	
L016	1-408-413-00	MICRO INDUCTOR 22UH	
L020	1-408-417-00	MICRO INDUCTOR 47UH	
L021	1-408-417-00	MICRO INDUCTOR 47UH	
L022	1-408-417-00	MICRO INDUCTOR 47UH	
		L.P.F	
LPF001	1-235-365-11	L.P.F	
LPF002	1-235-365-11	L.P.F	
		IC LINK	
PS001⚠	1-532-605-11	LINK. IC (N-10 0.4A)	
		TRANSISTOR	
Q001 ⚠	8-729-113-33	TRANSISTOR 2SB733-4	
Q002	=>8-729-245-83	TRANSISTOR 2SC2458	
Q003	=>8-729-204-83	TRANSISTOR 2SA1048-GR	
Q004	=>8-729-245-83	TRANSISTOR 2SC2458	
Q007	=>8-729-177-43	TRANSISTOR 2SD774	

NOTE:

The components identified by shading and mark ⚠ are critical for safety. Replace only with part number specified.

When indicating parts by reference number, please include the board name.

AF-3

Ref.No	Part No.	Description	Remark
Q008	8-729-603-50	TRANSISTOR 2SC403SP	
Q009	8-729-603-50	TRANSISTOR 2SC403SP	
Q010	8-729-106-07	TRANSISTOR 2SK514-H	
Q012	8-729-965-22	TRANSISTOR 2SC1652	
Q013	8-729-603-50	TRANSISTOR 2SC403SP	
Q015	8-729-106-07	TRANSISTOR 2SK514-H	
Q016	8-729-603-50	TRANSISTOR 2SC403SP	
Q017	=>8-729-245-83	TRANSISTOR 2SC2458	
Q018	8-729-117-54	TRANSISTOR 2SA1175	
Q019	=>8-729-245-83	TRANSISTOR 2SC2458	
Q020	=>8-729-245-83	TRANSISTOR 2SC2458	
Q021	=>8-729-245-83	TRANSISTOR 2SC2458	
Q022	=>8-729-245-83	TRANSISTOR 2SC2458	
Q023	=>8-729-245-83	TRANSISTOR 2SC2458	
Q024	=>8-729-245-83	TRANSISTOR 2SC2458	
Q030	=>8-729-245-83	TRANSISTOR 2SC2458	
Q031	=>8-729-245-83	TRANSISTOR 2SC2458	
Q032	8-729-965-22	TRANSISTOR 2SC1652	
Q034	8-729-965-22	TRANSISTOR 2SC1652	
Q035	8-729-965-22	TRANSISTOR 2SC1652	
Q036	8-729-965-22	TRANSISTOR 2SC1652	
Q037	=>8-729-245-83	TRANSISTOR 2SC2458	
Q038	=>8-729-245-83	TRANSISTOR 2SC2458	
Q044	8-729-965-22	TRANSISTOR 2SC1652	
Q046	=>8-729-245-83	TRANSISTOR 2SC2458	
Q049	8-729-900-89	TRANSISTOR DTC144ES	
Q701	=>8-729-245-83	TRANSISTOR 2SC2458	
Q703	=>8-729-245-83	TRANSISTOR 2SC2458	
Q704	=>8-729-245-83	TRANSISTOR 2SC2458	
Q705	=>8-729-245-83	TRANSISTOR 2SC2458	
Q706	8-729-965-22	TRANSISTOR 2SC1652	
Q707	8-729-993-72	TRANSISTOR 2SA937	
Q708	=>8-729-245-83	TRANSISTOR 2SC2458	
Q709	8-729-117-54	TRANSISTOR 2SA1175	
Q710	8-729-117-54	TRANSISTOR 2SA1175	
Q711	=>8-729-245-83	TRANSISTOR 2SC2458	
Q712	8-729-117-54	TRANSISTOR 2SA1175	
Q713	8-729-117-54	TRANSISTOR 2SA1175	
Q714	8-729-384-48	TRANSISTOR 2SA844	
Q715	8-729-384-48	TRANSISTOR 2SA844	
Q716	=>8-729-245-83	TRANSISTOR 2SC2458	
Q720	8-729-117-54	TRANSISTOR 2SA1175	
Q721	=>8-729-245-83	TRANSISTOR 2SC2458	
Q722	=>8-729-245-83	TRANSISTOR 2SC2458	
Q723	8-729-900-33	TRANSISTOR DTC144EF	
Q724	=>8-729-245-83	TRANSISTOR 2SC2458	
Q725	8-729-117-54	TRANSISTOR 2SA1175	

RESISTOR

Ref.No	Part No.	Description				Remark
R001	1-247-807-00	CARBON	100	5%	1/6W	
R002	1-247-847-00	CARBON	4.7K	5%	1/6W	
R003	1-247-831-00	CARBON	1K	5%	1/6W	
R004	1-247-867-00	CARBON	33K	5%	1/6W	
R005	1-247-867-00	CARBON	33K	5%	1/6W	
R006	1-247-823-00	CARBON	470	5%	1/6W	
R007	1-247-873-00	CARBON	56K	5%	1/6W	
R008	1-247-855-00	CARBON	10K	5%	1/6W	
R012	1-247-867-00	CARBON	33K	5%	1/6W	
R013	1-247-855-00	CARBON	10K	5%	1/6W	
R014	1-247-855-00	CARBON	10K	5%	1/6W	
R026	1-247-823-00	CARBON	470	5%	1/6W	
R027	1-247-861-00	CARBON	18K	5%	1/6W	
R028	1-247-831-00	CARBON	1K	5%	1/6W	
R029	1-247-825-00	CARBON	560	5%	1/6W	
R030	1-247-815-00	CARBON	220	5%	1/6W	
R031	1-247-822-00	CARBON	430	5%	1/6W	
R033	1-247-809-00	CARBON	120	5%	1/6W	
R034	1-247-839-00	CARBON	2.2K	5%	1/6W	
R035	⚠ 1-212-853-00	FUSIBLE	6.8	5%	1/4W	F
R036	1-247-855-00	CARBON	10K	5%	1/6W	
R037	1-247-823-00	CARBON	470	5%	1/6W	
R038	1-247-855-00	CARBON	10K	5%	1/6W	
R039	1-247-855-00	CARBON	10K	5%	1/6W	
R040	1-247-855-00	CARBON	10K	5%	1/6W	
R042	1-247-855-00	CARBON	10K	5%	1/6W	
R043	1-247-855-00	CARBON	10K	5%	1/6W	
R044	1-247-823-00	CARBON	470	5%	1/6W	
R045	1-247-861-00	CARBON	18K	5%	1/6W	
R046	1-247-831-00	CARBON	1K	5%	1/6W	
R047	1-247-825-00	CARBON	560	5%	1/6W	
R048	1-247-847-00	CARBON	4.7K	5%	1/6W	
R049	1-247-815-00	CARBON	220	5%	1/6W	
R050	1-247-822-00	CARBON	430	5%	1/6W	
R052	1-247-809-00	CARBON	120	5%	1/6W	
R054	1-247-855-00	CARBON	10K	5%	1/6W	
R055	1-247-855-00	CARBON	10K	5%	1/6W	
R056	1-247-855-00	CARBON	10K	5%	1/6W	
R057	1-247-855-00	CARBON	10K	5%	1/6W	
R061	1-247-831-00	CARBON	1K	5%	1/6W	
R069	1-247-839-00	CARBON	2.2K	5%	1/6W	
R071	1-247-855-00	CARBON	10K	5%	1/6W	
R072	1-247-867-00	CARBON	33K	5%	1/6W	
R073	1-247-831-00	CARBON	1K	5%	1/6W	
R074	1-247-867-00	CARBON	33K	5%	1/6W	
R078	1-247-823-00	CARBON	470	5%	1/6W	
R079	1-247-831-00	CARBON	1K	5%	1/6W	
R080	1-247-825-00	CARBON	560	5%	1/6W	
R081	1-247-813-00	CARBON	180	5%	1/6W	
R082	1-247-815-00	CARBON	220	5%	1/6W	
R083	1-247-822-00	CARBON	430	5%	1/6W	
R085	1-247-814-00	CARBON	200	5%	1/6W	
R087	1-247-855-00	CARBON	10K	5%	1/6W	
R088	1-247-855-00	CARBON	10K	5%	1/6W	
R089	1-247-855-00	CARBON	10K	5%	1/6W	
R090	1-247-823-00	CARBON	470	5%	1/6W	
R091	1-247-855-00	CARBON	10K	5%	1/6W	

NOTE:

The components identified by shading and mark ⚠ are critical for safety. Replace only with part number specified.

When indicating parts by reference number, please include the board name.

Ref.No	Part No.	Description				Remark
R093	1-247-831-00	CARBON	1K	5%	1/6W	
R099	1-247-838-00	CARBON	2K	5%	1/6W	
R105	1-247-839-00	CARBON	2.2K	5%	1/6W	
R106	1-247-823-00	CARBON	470	5%	1/6W	
R107	1-247-831-00	CARBON	1K	5%	1/6W	
R108	1-247-825-00	CARBON	560	5%	1/6W	
R110	1-247-839-00	CARBON	2.2K	5%	1/6W	
R111	1-247-867-00	CARBON	33K	5%	1/6W	
R112	1-247-855-00	CARBON	10K	5%	1/6W	
R113	1-247-815-00	CARBON	220	5%	1/6W	
R115	1-247-822-00	CARBON	430	5%	1/6W	
R116	1-247-814-00	CARBON	200	5%	1/6W	
R117	1-247-855-00	CARBON	10K	5%	1/6W	
R118	1-247-855-00	CARBON	10K	5%	1/6W	
R119	1-247-855-00	CARBON	10K	5%	1/6W	
R120	1-247-855-00	CARBON	10K	5%	1/6W	
R121	1-247-867-00	CARBON	33K	5%	1/6W	
R122	1-247-807-00	CARBON	100	5%	1/6W	
R123	1-247-863-00	CARBON	22K	5%	1/6W	
R124	1-247-863-00	CARBON	22K	5%	1/6W	
R125	1-247-863-00	CARBON	22K	5%	1/6W	
R126	1-247-839-00	CARBON	2.2K	5%	1/6W	
R127	1-247-863-00	CARBON	22K	5%	1/6W	
R128	1-247-863-00	CARBON	22K	5%	1/6W	
R129	1-247-863-00	CARBON	22K	5%	1/6W	
R130	1-247-839-00	CARBON	2.2K	5%	1/6W	
R132	1-247-855-00	CARBON	10K	5%	1/6W	
R133	1-247-859-00	CARBON	15K	5%	1/6W	
R134	1-247-840-00	CARBON	2.4K	5%	1/6W	
R135	1-247-824-00	CARBON	510	5%	1/6W	
R136	1-247-855-00	CARBON	10K	5%	1/6W	
R137	1-247-855-00	CARBON	10K	5%	1/6W	
R138	1-247-822-00	CARBON	430	5%	1/6W	
R139	1-247-842-00	CARBON	3K	5%	1/6W	
R140	1-247-858-00	CARBON	13K	5%	1/6W	
R141	1-247-858-00	CARBON	13K	5%	1/6W	
R142	1-247-838-00	CARBON	2K	5%	1/6W	
R143	1-247-842-00	CARBON	3K	5%	1/6W	
R144	1-247-895-00	CARBON	470K	5%	1/6W	
R146	1-247-849-00	CARBON	5.6K	5%	1/6W	
R147	1-247-865-00	CARBON	27K	5%	1/6W	
R148	1-247-848-00	CARBON	5.1K	5%	1/6W	
R149	1-247-828-00	CARBON	750	5%	1/6W	
R150	1-247-814-00	CARBON	200	5%	1/6W	
R151	1-247-851-00	CARBON	6.8K	5%	1/6W	
R152	1-247-847-00	CARBON	4.7K	5%	1/6W	
R157	1-247-855-00	CARBON	10K	5%	1/6W	
R158	1-247-859-00	CARBON	15K	5%	1/6W	
R159	1-247-840-00	CARBON	2.4K	5%	1/6W	
R160	1-247-824-00	CARBON	510	5%	1/6W	
R161	1-247-855-00	CARBON	10K	5%	1/6W	
R162	1-247-843-00	CARBON	3.3K	5%	1/6W	
R163	1-247-855-00	CARBON	10K	5%	1/6W	

Ref.No	Part No.	Description				Remark
R164	1-247-855-00	CARBON	10K	5%	1/6W	
R165	1-247-842-00	CARBON	3K	5%	1/6W	
R166	1-247-822-00	CARBON	430	5%	1/6W	
R167	1-247-858-00	CARBON	13K	5%	1/6W	
R168	1-247-838-00	CARBON	2K	5%	1/6W	
R169	1-247-858-00	CARBON	13K	5%	1/6W	
R170	1-247-842-00	CARBON	3K	5%	1/6W	
R172	1-247-865-00	CARBON	27K	5%	1/6W	
R173	1-247-895-00	CARBON	470K	5%	1/6W	
R174	1-247-849-00	CARBON	5.6K	5%	1/6W	
R175	1-247-836-00	CARBON	1.6K	5%	1/6W	
R176	1-247-814-00	CARBON	200	5%	1/6W	
R177	1-247-848-00	CARBON	5.1K	5%	1/6W	
R178	1-247-828-00	CARBON	750	5%	1/6W	
R179	⚠ 1-247-815-00	CARBON	220	5%	1/6W	
R180	1-215-465-00	METAL	68K	1%	1/6W	
R181	1-215-446-00	METAL	11K	1%	1/6W	
R183	1-215-462-00	METAL	51K	1%	1/6W	
R184	1-215-462-00	METAL	51K	1%	1/6W	
R185	1-247-871-00	CARBON	47K	5%	1/6W	
R190	1-215-446-00	METAL	11K	1%	1/6W	
R191	1-215-465-00	METAL	68K	1%	1/6W	
R194	1-247-872-00	CARBON	51K	5%	1/6W	
R200	1-247-872-00	CARBON	51K	5%	1/6W	
R205	1-247-855-00	CARBON	10K	5%	1/6W	
R206	1-247-859-00	CARBON	15K	5%	1/6W	
R217	⚠ 1-247-815-00	CARBON	220	5%	1/6W	
R218	1-247-871-00	CARBON	47K	5%	1/6W	
R220	1-247-875-00	CARBON	68K	5%	1/6W	
R221	1-247-850-00	CARBON	6.2K	5%	1/6W	
R222	1-247-863-00	CARBON	22K	5%	1/6W	
R223	1-247-831-00	CARBON	1K	5%	1/6W	
R224	1-247-887-00	CARBON	220K	5%	1/6W	
R225	1-247-842-00	CARBON	3K	5%	1/6W	
R226	1-247-879-00	CARBON	100K	5%	1/6W	
R227	1-247-855-00	CARBON	10K	5%	1/6W	
R228	1-247-879-00	CARBON	100K	5%	1/6W	
R229	1-247-831-00	CARBON	1K	5%	1/6W	
R230	1-247-887-00	CARBON	220K	5%	1/6W	
R231	1-247-842-00	CARBON	3K	5%	1/6W	
R232	1-247-848-00	CARBON	5.1K	5%	1/6W	
R233	1-247-848-00	CARBON	5.1K	5%	1/6W	
R234	⚠ 1-247-815-00	CARBON	220	5%	1/6W	
R235	1-247-871-00	CARBON	47K	5%	1/6W	
R236	1-247-871-00	CARBON	47K	5%	1/6W	
R237	1-247-839-00	CARBON	2.2K	5%	1/6W	
R239	1-247-863-00	CARBON	22K	5%	1/6W	
R240	1-247-871-00	CARBON	47K	5%	1/6W	
R241	1-247-875-00	CARBON	68K	5%	1/6W	
R243	1-247-850-00	CARBON	6.2K	5%	1/6W	
R244	1-247-855-00	CARBON	10K	5%	1/6W	
R245	1-247-855-00	CARBON	10K	5%	1/6W	
R246	1-247-855-00	CARBON	10K	5%	1/6W	

NOTE:

The components identified by shading and mark ⚠ are critical for safety. Replace only with part number specified.

When indicating parts by reference number, please include the board name.

AF-3

Ref.No	Part No.	Description				Remark
R247	1-247-855-00	CARBON	10K	5%	1/6W	
R248	1-247-863-00	CARBON	22K	5%	1/6W	
R249	1-247-855-00	CARBON	10K	5%	1/6W	
R253	1-247-855-00	CARBON	10K	5%	1/6W	
R255	1-247-867-00	CARBON	33K	5%	1/6W	
R256	1-247-863-00	CARBON	22K	5%	1/6W	
R262	1-247-851-00	CARBON	6.8K	5%	1/6W	
R263	1-247-823-00	CARBON	470	5%	1/6W	
R264	1-247-861-00	CARBON	18K	5%	1/6W	
R265	1-247-861-00	CARBON	18K	5%	1/6W	
R266	1-247-807-00	CARBON	100	5%	1/6W	
R267	1-215-442-00	METAL	7.5K	1%	1/6W	
R268	1-247-844-00	CARBON	3.6K	5%	1/6W	
R269	1-247-855-00	CARBON	10K	5%	1/6W	
R270	1-247-855-00	CARBON	10K	5%	1/6W	
R271	1-247-875-00	CARBON	68K	5%	1/6W	
R272	1-247-871-00	CARBON	47K	5%	1/6W	
R273	1-247-871-00	CARBON	47K	5%	1/6W	
R275	1-247-851-00	CARBON	6.8K	5%	1/6W	
R276	1-247-823-00	CARBON	470	5%	1/6W	
R277	1-247-861-00	CARBON	18K	5%	1/6W	
R278	1-247-861-00	CARBON	18K	5%	1/6W	
R279	1-247-807-00	CARBON	100	5%	1/6W	
R280	1-215-421-00	METAL	1K	1%	1/6W	
R281	1-247-844-00	CARBON	3.6K	5%	1/6W	
R282	1-247-855-00	CARBON	10K	5%	1/6W	
R283	1-247-855-00	CARBON	10K	5%	1/6W	
R284	1-247-869-00	CARBON	39K	5%	1/6W	
R285	1-247-871-00	CARBON	47K	5%	1/6W	
R286	1-247-871-00	CARBON	47K	5%	1/6W	
R288	1-215-453-00	METAL	22K	1%	1/6W	
R289	1-215-453-00	METAL	22K	1%	1/6W	
R290	1-247-807-00	CARBON	100	5%	1/6W	
R291	1-247-831-00	CARBON	1K	5%	1/6W	
R293	1-247-867-00	CARBON	33K	5%	1/6W	
R296	1-247-867-00	CARBON	33K	5%	1/6W	
R297	1-247-848-00	CARBON	5.1K	5%	1/6W	
R298	1-247-863-00	CARBON	22K	5%	1/6W	
R299	1-247-863-00	CARBON	22K	5%	1/6W	
R300	1-247-863-00	CARBON	22K	5%	1/6W	
R301	1-247-855-00	CARBON	10K	5%	1/6W	
R302	1-247-855-00	CARBON	10K	5%	1/6W	
R303	1-247-871-00	CARBON	47K	5%	1/6W	
R304	1-247-855-00	CARBON	10K	5%	1/6W	
R308	1-247-863-00	CARBON	22K	5%	1/6W	
R310	1-247-847-00	CARBON	4.7K	5%	1/6W	
R311	1-247-855-00	CARBON	10K	5%	1/6W	
R312	1-247-843-00	CARBON	3.3K	5%	1/6W	
R313	1-247-855-00	CARBON	10K	5%	1/6W	
R315	1-247-855-00	CARBON	10K	5%	1/6W	
R322	1-247-879-00	CARBON	100K	5%	1/6W	
R323	1-247-839-00	CARBON	2.2K	5%	1/6W	
R324	1-247-871-00	CARBON	47K	5%	1/6W	
R325	1-247-879-00	CARBON	100K	5%	1/6W	
R326	1-247-831-00	CARBON	1K	5%	1/6W	
R327	1-247-859-00	CARBON	15K	5%	1/6W	
R330	1-247-838-00	CARBON	2K	5%	1/6W	
R332	1-247-862-00	CARBON	20K	5%	1/6W	
R338	1-247-862-00	CARBON	20K	5%	1/6W	
R343	1-247-807-00	CARBON	100	5%	1/6W	
R344	1-247-807-00	CARBON	100	5%	1/6W	
R345	1-247-820-00	CARBON	360	5%	1/6W	
R346	1-247-820-00	CARBON	360	5%	1/6W	
R350	1-247-843-00	CARBON	3.3K	5%	1/6W	
R351	1-247-843-00	CARBON	3.3K	5%	1/6W	
R352	1-247-857-00	CARBON	12K	5%	1/6W	
R601	1-247-871-00	CARBON	47K	5%	1/6W	
R701	1-247-855-00	CARBON	10K	5%	1/6W	
R702	1-247-855-00	CARBON	10K	5%	1/6W	
R703	1-247-847-00	CARBON	4.7K	5%	1/6W	
R706	1-247-843-00	CARBON	3.3K	5%	1/6W	
R707	1-247-847-00	CARBON	4.7K	5%	1/6W	
R708	1-247-843-00	CARBON	3.3K	5%	1/6W	
R711	1-247-867-00	CARBON	33K	5%	1/6W	
R712	1-247-867-00	CARBON	33K	5%	1/6W	
R713	1-247-855-00	CARBON	10K	5%	1/6W	
R714	1-247-867-00	CARBON	33K	5%	1/6W	
R715	1-247-867-00	CARBON	33K	5%	1/6W	
R716	1-247-855-00	CARBON	10K	5%	1/6W	
R718	1-247-849-00	CARBON	5.6K	5%	1/6W	
R719	1-247-849-00	CARBON	5.6K	5%	1/6W	
R720	1-247-849-00	CARBON	5.6K	5%	1/6W	
R721	1-247-849-00	CARBON	5.6K	5%	1/6W	
R722	1-247-867-00	CARBON	33K	5%	1/6W	
R724	1-247-867-00	CARBON	33K	5%	1/6W	
R725	1-247-855-00	CARBON	10K	5%	1/6W	
R726	1-247-867-00	CARBON	33K	5%	1/6W	
R727	1-247-867-00	CARBON	33K	5%	1/6W	
R728	1-247-855-00	CARBON	10K	5%	1/6W	
R729	1-247-839-00	CARBON	2.2K	5%	1/6W	
R730	1-247-813-00	CARBON	180	5%	1/6W	
R731	1-247-813-00	CARBON	180	5%	1/6W	
R732	1-247-867-00	CARBON	33K	5%	1/6W	
R734	1-247-812-00	CARBON	160	5%	1/6W	
R735	1-247-812-00	CARBON	160	5%	1/6W	
R736	1-247-867-00	CARBON	33K	5%	1/6W	
R737	1-247-821-00	CARBON	390	5%	1/6W	
R739	1-247-863-00	CARBON	22K	5%	1/6W	
R740	1-247-863-00	CARBON	22K	5%	1/6W	
R741	1-247-855-00	CARBON	10K	5%	1/6W	
R742	1-247-859-00	CARBON	15K	5%	1/6W	
R743	1-247-859-00	CARBON	15K	5%	1/6W	
R744	1-247-847-00	CARBON	4.7K	5%	1/6W	
R745	1-247-847-00	CARBON	4.7K	5%	1/6W	
R746	1-247-855-00	CARBON	10K	5%	1/6W	
R747	1-247-855-00	CARBON	10K	5%	1/6W	

When indicating parts by reference number, please include the board name.

Ref.No	Part No.	Description				Remark
R748	1-247-843-00	CARBON	3.3K	5%	1/6W	
R749	1-247-843-00	CARBON	3.3K	5%	1/6W	
R750	1-247-871-00	CARBON	47K	5%	1/6W	
R751	1-247-871-00	CARBON	47K	5%	1/6W	
R754	1-247-903-00	CARBON	1M	5%	1/6W	
R755	1-247-903-00	CARBON	1M	5%	1/6W	
R756	1-247-837-00	CARBON	1.8K	5%	1/6W	
R757	1-247-837-00	CARBON	1.8K	5%	1/6W	
R758	1-247-807-00	CARBON	100	5%	1/6W	
R759	1-247-807-00	CARBON	100	5%	1/6W	
R780	1-247-825-00	CARBON	560	5%	1/6W	
R781	1-247-825-00	CARBON	560	5%	1/6W	
R782	1-247-867-00	CARBON	33K	5%	1/6W	
R783	1-247-867-00	CARBON	33K	5%	1/6W	
R784	1-247-825-00	CARBON	560	5%	1/6W	
R785	1-247-825-00	CARBON	560	5%	1/6W	
R786	1-247-855-00	CARBON	10K	5%	1/6W	
R787	1-247-855-00	CARBON	10K	5%	1/6W	
R788 ⚠	1-247-831-00	CARBON	1K	5%	1/6W	
R789	1-247-896-00	CARBON	510K	5%	1/6W	
R790	1-247-879-00	CARBON	100K	5%	1/6W	
R793	1-247-879-00	CARBON	100K	5%	1/6W	
R794	1-247-847-00	CARBON	4.7K	5%	1/6W	
R795	1-247-847-00	CARBON	4.7K	5%	1/6W	
R796	1-247-839-00	CARBON	2.2K	5%	1/6W	
R797	1-247-839-00	CARBON	2.2K	5%	1/6W	
R798	1-247-803-00	CARBON	68	5%	1/6W	
R799	1-247-831-00	CARBON	1K	5%	1/6W	
R800	1-247-831-00	CARBON	1K	5%	1/6W	
R801 ⚠	1-247-815-00	CARBON	220	5%	1/6W	
R802 ⚠	1-247-815-00	CARBON	220	5%	1/6W	
R803	1-247-875-00	CARBON	68K	5%	1/6W	
R804	1-247-855-00	CARBON	10K	5%	1/6W	
R805	1-247-855-00	CARBON	10K	5%	1/6W	
R806	1-247-855-00	CARBON	10K	5%	1/6W	
R807	1-247-815-00	CARBON	220	5%	1/6W	
R808	1-247-815-00	CARBON	220	5%	1/6W	
R809	1-247-813-00	CARBON	180	5%	1/6W	
R810	1-247-855-00	CARBON	10K	5%	1/6W	
R811	1-247-855-00	CARBON	10K	5%	1/6W	
R812	1-247-855-00	CARBON	10K	5%	1/6W	
R813	1-247-855-00	CARBON	10K	5%	1/6W	
R814	1-247-855-00	CARBON	10K	5%	1/6W	
R815	1-247-855-00	CARBON	10K	5%	1/6W	
R816	1-247-895-00	CARBON	470K	5%	1/6W	
R817	1-247-879-00	CARBON	100K	5%	1/6W	

VARIABLE RESISTOR

RV005	1-228-996-00	RES, ADJ, METAL GLAZE 47K
RV006	1-228-996-00	RES, ADJ, METAL GLAZE 47K
RV010	1-228-996-00	RES, ADJ, METAL GLAZE 47K
RV012	1-228-996-00	RES, ADJ, METAL GLAZE 47K
RV013	1-228-993-00	RES, ADJ, METAL GLAZE 4.7K
RV014	1-228-990-00	RES, ADJ, METAL GLAZE 1K

NOTE:

The components identified by shading and mark ⚠ are critical for safety. Replace only with part number specified.

When indicating parts by reference number, please include the board name.

Ref.No	Part No.	Description	Remark
RV015	1-228-991-00	RES, ADJ, METAL GLAZE 2.2K	
RV016	1-228-990-00	RES, ADJ, METAL GLAZE 1K	
RV017	1-228-991-00	RES, ADJ, METAL GLAZE 2.2K	
RV018	1-228-993-00	RES, ADJ, METAL GLAZE 4.7K	
RV019	1-228-993-00	RES, ADJ, METAL GLAZE 4.7K	
RV020	1-228-997-00	RES, ADJ, METAL GLAZE 100K	
RV021	1-228-997-00	RES, ADJ, METAL GLAZE 100K	
RV022	1-228-997-00	RES, ADJ, METAL GLAZE 100K	
RV023	1-228-997-00	RES, ADJ, METAL GLAZE 100K	

Q DET COIL

T002	1-404-545-11	COIL, Q DET
T004	1-404-545-11	COIL, Q DET
T006	1-404-544-11	COIL, Q DET
T008	1-404-544-11	COIL, Q DET

POST PIN

TP001	1-536-354-00	POST PIN
TP002	1-536-354-00	POST PIN
TP003	1-536-354-00	POST PIN
TP004	1-536-354-00	POST PIN
TP005	1-536-354-00	POST PIN
TP006	1-536-354-00	POST PIN
TP007	1-536-354-00	POST PIN
TP008	1-536-354-00	POST PIN
TP009	1-536-354-00	POST PIN
TP010	1-536-354-00	POST PIN
TP011	1-536-354-00	POST PIN
TP012	1-536-354-00	POST PIN

****

♦:A-6713-203-A	AM-5 BOARD, COMPLETE	
	**********	
♦:3-684-075-01	CASE (MAIN), SHIELD, AM	
♦:3-684-076-01	LID, UPPER, AM SHIELD CASE	
♦:3-684-077-03	LID, BOTTOM, AM SHIELD CASE	

CAPACITOR

C501	1-123-356-00	ELECT	10MF	20%	16V
C505	1-123-330-00	ELECT	22MF	20%	16V
C506	1-123-333-00	ELECT	100MF	20%	16V
C507	1-123-333-00	ELECT	100MF	20%	16V
C508	1-123-328-00	ELECT	4.7MF	20%	25V
C509	1-123-328-00	ELECT	4.7MF	20%	25V
C510	1-130-497-00	MYLAR	0.15MF	5%	50V
C511	1-130-486-51	MYLAR	0.018MF	5%	50V
C512	1-123-333-00	ELECT	100MF	20%	16V
C513	1-123-379-00	ELECT	0.47MF	20%	50V
C514	1-123-330-00	ELECT	22MF	20%	16V
C515	1-102-111-00	CERAMIC	270PF	10%	50V
C516	1-123-354-00	ELECT	3.3MF	20%	50V
C517	1-130-507-51	MYLAR	0.0018MF	10%	50V
C518	1-123-305-00	ELECT	33MF	20%	10V

AM-5

Ref.No	Part No.	Description				Remark
C519	1-130-516-51	MYLAR	0.01MF	10%	50V	
C520	1-123-354-00	ELECT	3.3MF	20%	50V	
C521	1-123-328-00	ELECT	4.7MF	20%	25V	
C522	1-123-333-00	ELECT	100MF	20%	16V	
C524	1-127-475-00	ELECT(SOLID)	0.22MF	5%	25V	
C525	1-130-502-00	MYLAR	680PF	10%	50V	
C526	1-123-332-00	ELECT	47MF	20%	16V	
C527	1-130-479-00	MYLAR	0.0047MF	5%	50V	
C528	1-130-477-00	MYLAR	0.0033MF	5%	50V	
C529	1-129-709-00	FILM	0.0039MF	10%	630V	
C530	1-102-108-00	CERAMIC	150PF	10%	50V	
C531	1-123-333-00	ELECT	100MF	20%	16V	
C533	1-130-518-51	MYLAR	0.015MF	10%	50V	
C534	1-123-332-00	ELECT	47MF	20%	16V	
C535	1-102-111-00	CERAMIC	270PF	10%	50V	
C536	1-123-379-00	ELECT	0.47MF	20%	50V	
C537	1-123-333-00	ELECT	100MF	20%	16V	
C539	1-123-356-00	ELECT	10MF	20%	16V	
		CONNECTOR				
CN501	1-560-893-00	PIN, CONNECTOR 5P				
CN502	1-560-893-00	PIN, CONNECTOR 5P				
CN503	1-564-030-00	PIN, CONNECTOR 5P				
		TRIMMER				
CT501	1-141-215-00	CAP, TRIMAR				
		DIODE				
D506	8-719-911-19	DIODE 1SS119				
D507	=>8-719-200-02	DIODE 10E2				
D508	8-719-812-31	DIODE TLR123				
		IC				
IC501	8-759-800-79	IC LA7048				
		COIL				
L501	1-407-963-00	MICRO INDUCTOR 15MMH				
L502	1-407-508-00	MICRO INDUCTOR 22MMH				
L503	1-407-710-00	MICRO INDUCTOR 270UH				
L504	1-407-508-00	MICRO INDUCTOR 22MMH				
		TRANSISTOR				
Q501	8-729-988-12	TRANSISTOR 2SA881				
Q502	=>8-729-245-83	TRANSISTOR 2SC2458				
Q504	8-729-967-32	TRANSISTOR 2SC2673				
Q505	8-729-663-47	TRANSISTOR 2SC945-P				
Q506	8-729-663-47	TRANSISTOR 2SC945-P				
Q507	=>8-729-204-83	TRANSISTOR 2SA1048-GR				
Q508	=>8-729-245-83	TRANSISTOR 2SC2458				
Q509	=>8-729-245-83	TRANSISTOR 2SC2458				
Q510	=>8-729-245-83	TRANSISTOR 2SC2458				
Q511	=>8-729-245-83	TRANSISTOR 2SC2458				
Q512	=>8-729-245-83	TRANSISTOR 2SC2458				
Q513	=>8-729-245-83	TRANSISTOR 2SC2458				
		RESISTOR				
R503	1-247-839-00	CARBON	2.2K	5%	1/6W	
R504	1-247-863-00	CARBON	22K	5%	1/6W	
R505	1-247-871-00	CARBON	47K	5%	1/6W	
R506 ⚠	1-247-660-00	CARBON	82	5%	1/4W	F
R507	1-247-847-00	CARBON	4.7K	5%	1/6W	
R508	1-247-867-00	CARBON	33K	5%	1/6W	
R509	1-247-847-00	CARBON	4.7K	5%	1/6W	
R510	1-247-855-00	CARBON	10K	5%	1/6W	
R511	1-247-867-00	CARBON	33K	5%	1/6W	
R512 ⚠	1-247-819-00	CARBON	330	5%	1/6W	
R513	1-247-855-00	CARBON	10K	5%	1/6W	
R514	1-247-903-00	CARBON	1M	5%	1/6W	
R515	1-247-849-00	CARBON	5.6K	5%	1/6W	
R516	1-247-819-00	CARBON	330	5%	1/6W	
R517	1-210-825-00	SOLID	3.3M	5%	1/4W	
R518	1-247-851-00	CARBON	6.8K	5%	1/6W	
R519	1-247-859-00	CARBON	15K	5%	1/6W	
R520	1-247-819-00	CARBON	330	5%	1/6W	
R521	1-247-891-00	CARBON	330K	5%	1/6W	
R522	1-247-883-00	CARBON	150K	5%	1/6W	
R524	1-247-783-00	CARBON	10	5%	1/6W	
R526	1-247-863-00	CARBON	22K	5%	1/6W	
R528	1-247-853-00	CARBON	8.2K	5%	1/6W	
R530	1-247-849-00	CARBON	5.6K	5%	1/6W	
R531	1-247-829-00	CARBON	820	5%	1/6W	
R532	1-247-862-00	CARBON	20K	5%	1/6W	
R533 ⚠	1-246-980-00	CARBON	3.3	5%	1/8W	F
R534	1-247-839-00	CARBON	2.2K	5%	1/6W	
R535	1-247-839-00	CARBON	2.2K	5%	1/6W	
R536	1-247-849-00	CARBON	5.6K	5%	1/6W	
R537	1-247-855-00	CARBON	10K	5%	1/6W	
R538	1-247-863-00	CARBON	22K	5%	1/6W	
R539	1-247-831-00	CARBON	1K	5%	1/6W	
R540	1-247-838-00	CARBON	2K	5%	1/6W	
R541	1-247-877-00	CARBON	82K	5%	1/6W	
R542	1-247-865-00	CARBON	27K	5%	1/6W	
R543	1-247-871-00	CARBON	47K	5%	1/6W	
R545	1-247-871-00	CARBON	47K	5%	1/6W	
R546	1-247-841-00	CARBON	2.7K	5%	1/6W	
R547	1-247-863-00	CARBON	22K	5%	1/6W	
R548	1-247-843-00	CARBON	3.3K	5%	1/6W	
R550	1-247-875-00	CARBON	68K	5%	1/6W	
R551	1-247-855-00	CARBON	10K	5%	1/6W	
R552	1-247-783-00	CARBON	10	5%	1/6W	
R561	1-247-840-00	CARBON	2.4K	5%	1/6W	
R562	1-247-855-00	CARBON	10K	5%	1/6W	
R563	1-247-895-00	CARBON	470K	5%	1/6W	

NOTE:

The components identified by shading and mark ⚠ are critical for safety. Replace only with part number specified.

When indicating parts by reference number, please include the board name.

Ref.No	Part No.	Description			Remark
		VARIABLE RESISTOR			
RV501	1-228-748-00	RES, ADJ, CARBON 10K			
RV502	⚠1-228-989-00	RES, ADJ, METAL GLAZE 470			
RV503	1-228-751-00	RES, ADJ, CARBON 100K			
		TRANSFORMER			
T501	1-433-237-00	TRANSFORMER, OSCILLATOR			
		POST PIN			
TP510	1-536-354-00	POST PIN			
TP513	1-536-354-00	POST PIN			
**********					
♠:A-6715-224-A		SS-28 BOARD, COMPLETE			
		**********			
		CAPACITOR			
C001	1-123-380-00	ELECT	1MF	20%	50V
C002	1-123-356-00	ELECT	10MF	20%	16V
C003	1-161-021-00	CERAMIC	0.047MF	10%	25V
C004	1-123-333-00	ELECT	100MF	20%	16V
C005	1-161-013-00	CERAMIC	0.01MF	10%	25V
C006	1-123-305-00	ELECT	33MF	20%	10V
C007	1-123-328-00	ELECT	4.7MF	20%	25V
C008	1-161-021-00	CERAMIC	0.047MF	10%	25V
C009	1-161-021-00	CERAMIC	0.047MF	10%	25V
C301	1-123-354-00	ELECT	3.3MF	20%	50V
C302	1-161-021-00	CERAMIC	0.047MF	10%	25V
C305	1-123-354-00	ELECT	3.3MF	20%	50V
C306	1-161-021-00	CERAMIC	0.047MF	10%	25V
C307	1-130-482-00	MYLAR	0.0082MF	5%	50V
C308	1-130-516-00	MYLAR	0.01MF	10%	50V
C309	1-130-516-00	MYLAR	0.01MF	10%	50V
C310	1-161-016-00	CERAMIC	0.018MF	10%	25V
C311	1-161-016-00	CERAMIC	0.018MF	10%	25V
C312	1-123-330-00	ELECT	22MF	20%	16V
C314	1-161-016-00	CERAMIC	0.018MF	10%	25V
C315	1-161-013-00	CERAMIC	0.01MF	10%	25V
C316	1-123-356-00	ELECT	10MF	20%	16V
C317	1-123-380-00	ELECT	1MF	20%	50V
C318	1-102-125-00	CERAMIC	0.0047MF	10%	50V
C319	1-161-021-00	CERAMIC	0.047MF	10%	25V
C320	1-124-429-00	ELECT	0.68MF	20%	50V
C321	1-161-021-00	CERAMIC	0.047MF	10%	25V
C322	1-161-021-00	CERAMIC	0.047MF	10%	25V
C323	1-123-354-00	ELECT	3.3MF	20%	50V
C324	1-127-476-00	ELECT(SOLID)	0.33MF	5%	25V
C326	1-123-310-00	ELECT	470MF	20%	10V
C327	1-123-308-00	ELECT	220MF	20%	10V
C328	1-161-021-00	CERAMIC	0.047MF	10%	25V
C329	1-131-357-00	TANTALUM	4.7MF	20%	25V
C330	1-123-381-00	ELECT	2.2MF	20%	50V

Ref.No	Part No.	Description			Remark
C331	1-123-381-00	ELECT	2.2MF	20%	50V
C332	1-161-021-00	CERAMIC	0.047MF	10%	25V
C333	1-131-357-00	TANTALUM	4.7MF	20%	25V
C334	1-102-106-00	CERAMIC	100PF	10%	50V
C335	1-123-333-00	ELECT	100MF	20%	16V
C336	1-123-333-00	ELECT	100MF	20%	16V
C337	1-130-479-00	MYLAR	0.0047MF	5%	50V
C338	1-123-332-00	ELECT	47MF	20%	16V
C339	1-161-021-00	CERAMIC	0.047MF	10%	25V
C340	1-123-381-00	ELECT	2.2MF	20%	50V
C341	1-123-306-00	ELECT	47MF	20%	10V
C342	1-123-306-00	ELECT	47MF	20%	10V
C343	1-161-016-00	CERAMIC	0.018MF	10%	25V
C344	1-161-013-00	CERAMIC	0.01MF	10%	25V
C345	1-161-017-00	CERAMIC	0.022MF	10%	25V
C346	1-161-002-00	CERAMIC	0.0012MF	10%	25V
C347	1-161-016-00	CERAMIC	0.018MF	10%	25V
C348	1-161-013-00	CERAMIC	0.01MF	10%	25V
C349	1-123-354-00	ELECT	3.3MF	20%	50V
C350	1-127-479-00	ELECT(SOLID)	1MF	5%	25V
C351	1-161-019-00	CERAMIC	0.033MF	10%	25V
C352	1-123-330-00	ELECT	22MF	20%	16V
C353	1-161-019-00	CERAMIC	0.033MF	10%	25V
C354	1-123-328-00	ELECT	4.7MF	20%	25V
C355	1-161-013-00	CERAMIC	0.01MF	10%	25V
C356	1-123-332-00	ELECT	47MF	20%	16V
C357	1-161-013-00	CERAMIC	0.01MF	10%	25V
C358	1-161-013-00	CERAMIC	0.01MF	10%	25V
C359	1-123-328-00	ELECT	4.7MF	20%	25V
C360	1-123-333-00	ELECT	100MF	20%	16V
C361	1-161-013-00	CERAMIC	0.01MF	10%	25V
C362	1-130-493-00	MYLAR	0.068MF	5%	50V
C601	1-129-794-00	FILM	0.0033MF	5%	100V
C602	1-129-794-00	FILM	0.0033MF	5%	100V
C603	1-130-524-00	MYLAR	0.047MF	10%	50V
C604	1-130-520-00	MYLAR	0.022MF	10%	50V
C605	1-130-524-00	MYLAR	0.047MF	10%	50V
C606	1-123-330-00	ELECT	22MF	20%	16V
C607	1-123-331-00	ELECT	33MF	20%	25V
C608	1-123-331-00	ELECT	33MF	20%	25V
C610	1-123-380-00	ELECT	1MF	20%	50V
C611	1-123-306-00	ELECT	47MF	20%	10V
C612	1-161-021-00	CERAMIC	0.047MF	10%	25V
C801	1-102-529-00	CERAMIC	100PF	5%	50V
C802	1-102-529-00	CERAMIC	100PF	5%	50V
C901	1-101-004-00	CARAMIC	0.01MF		50V
		FILTER			
CF601	1-527-822-00	OSCILLATOR, CERAMIC			
		CONNECTOR			
CN001	♠:1-560-891-00	PIN, CONNECTOR 3P			

NOTE:

The components identified by shading and mark ⚠ are critical for safety. Replace only with part number specified.

When indicating parts by reference number, please include the board name.

SS-28

Ref.No	Part No.	Description	Remark
CN002	1-560-891-00	PIN, CONNECTOR 3P	
CN003	1-560-892-00	PIN, CONNECTOR 4P	
CN004	1-560-890-00	PIN, CONNECTOR 2P	
CN301	1-560-892-00	PIN, CONNECTOR 4P	
CN302	1-560-892-00	PIN, CONNECTOR 4P	
CN303	1-560-890-00	PIN, CONNECTOR 2P	
CN304	1-560-890-00	PIN, CONNECTOR 2P	
CN305	1-560-897-00	PIN, CONNECTOR 9P	
CN306	1-560-895-00	PIN, CONNECTOR 7P	
CN307	1-560-466-00	PIN, CONNECTOR 3P	
CN308	1-560-894-00	PIN, CONNECTOR 6P	
CN309	1-560-892-00	PIN, CONNECTOR 4P	
CN601	1-560-895-00	PIN, CONNECTOR 7P	
CN602	1-560-897-00	PIN, CONNECTOR 9P	
CN603	1-560-890-00	PIN, CONNECTOR 2P	
CN604	1-560-890-00	PIN, CONNECTOR 2P	
CN605	1-560-890-00	PIN, CONNECTOR 2P	
CN606	1-560-892-00	PIN, CONNECTOR 4P	
CN607	1-560-890-00	PIN, CONNECTOR 2P	
CN608	1-560-892-00	PIN, CONNECTOR 4P	
CN609	1-560-893-00	PIN, CONNECTOR 5P	
CN610	1-560-891-00	PIN, CONNECTOR 3P	
CN611	1-560-891-00	PIN, CONNECTOR 3P	
CN612	1-560-896-00	PIN, CONNECTOR 8P	
CN613	1-560-895-00	PIN, CONNECTOR 7P	
CN614	1-560-897-00	PIN, CONNECTOR 9P	
CN615	1-560-893-00	PIN, CONNECTOR 5P	
		DIODE	
D001	8-719-000-06	DIODE MC921	
D002	8-719-911-19	DIODE 1SS119	
D003	8-719-911-19	DIODE 1SS119	
D004	8-719-911-19	DIODE 1SS119	
D005	8-719-200-02	DIODE 10E2	
D006	8-719-911-19	DIODE 1SS119	
D007	8-719-911-19	DIODE 1SS119	
D008	8-719-911-19	DIODE 1SS119	
D009	8-719-911-19	DIODE 1SS119	
D010	8-719-911-19	DIODE 1SS119	
D011	8-719-911-19	DIODE 1SS119	
D012	8-719-911-19	DIODE 1SS119	
D303 ⚠	8-719-100-57	DIODE RD10E-B2	
D304 ⚠	8-719-162-07	DIODE RD6.2E-B	
D305	8-719-911-19	DIODE 1SS119	
D306	8-719-000-04	DIODE MC911	
D307	8-719-812-31	DIODE TLR123	
D308	8-719-000-06	DIODE MC921	
D309	8-719-911-19	DIODE 1SS119	
D310	8-719-000-12	DIODE MC931	
D311	8-719-000-06	DIODE MC921	
D312	8-719-911-06	DIODE 1SS106	
D313	8-719-911-06	DIODE 1SS106	
D601	8-719-911-19	DIODE 1SS119	

Ref.No	Part No.	Description	Remark
D602	8-719-000-06	DIODE MC921	
D603	8-719-911-19	DIODE 1SS119	
D604	8-719-911-19	DIODE 1SS119	
D605	8-719-911-19	DIODE 1SS119	
D606	8-719-911-19	DIODE 1SS119	
D607	8-719-911-19	DIODE 1SS119	
D608	8-719-911-19	DIODE 1SS119	
		IC	
IC001	8-759-135-80	IC UPC358C	
IC301=>	8-751-941-05	IC CX194B-5	
IC302	8-759-135-80	IC UPC358C	
IC303	8-759-145-58	IC UPC4558C	
IC304	8-759-132-40	IC UPC324C	
IC305	8-759-240-53	IC TC4053BP	
IC306	8-759-132-40	IC UPC324C	
IC307	8-759-240-53	IC TC4053BP	
IC601	8-759-910-55	IC MB88421-141M	
IC602	8-759-800-72	IC LA7205	
		COIL	
L601	1-408-418-00	MICRO INDUCTOR 56UH	
		IC LINK	
PS001 ⚠	1-532-637-11	LINK, IC (N-25 1A)	
PS002 ⚠	1-532-679-11	LINK, IC (N-15 0.6A)	
PS003 ⚠	1-532-605-11	LINK, IC (N-10 0.4A)	
		TRANSISTOR	
Q001 =>	8-729-245-83	TRANSISTOR 2SC2458	
Q002 =>	8-729-204-83	TRANSISTOR 2SA1048-GR	
Q003 =>	8-729-245-83	TRANSISTOR 2SC2458	
Q004 =>	8-729-204-83	TRANSISTOR 2SA1048-GR	
Q005 =>	8-729-245-83	TRANSISTOR 2SC2458	
Q006 =>	8-729-245-83	TRANSISTOR 2SC2458	
Q007 =>	8-729-245-83	TRANSISTOR 2SC2458	
Q008 =>	8-729-245-83	TRANSISTOR 2SC2458	
Q009 =>	8-729-245-83	TRANSISTOR 2SC2458	
Q010 =>	8-729-245-83	TRANSISTOR 2SC2458	
Q011 =>	8-729-245-83	TRANSISTOR 2SC2458	
Q012 =>	8-729-245-83	TRANSISTOR 2SC2458	
Q013 =>	8-729-245-83	TRANSISTOR 2SC2458	
Q014 =>	8-729-245-83	TRANSISTOR 2SC2458	
Q015 =>	8-729-245-83	TRANSISTOR 2SC2458	
Q016 =>	8-729-245-83	TRANSISTOR 2SC2458	
Q017 =>	8-729-245-83	TRANSISTOR 2SC2458	
Q018 =>	8-729-245-83	TRANSISTOR 2SC2458	
Q020 =>	8-729-204-83	TRANSISTOR 2SA1048-GR	
Q021 =>	8-729-177-32	TRANSISTOR 2SD773	
Q022 =>	8-729-245-83	TRANSISTOR 2SC2458	
Q023 =>	8-729-245-83	TRANSISTOR 2SC2458	
Q024 =>	8-729-245-83	TRANSISTOR 2SC2458	
Q025 =>	8-729-245-83	TRANSISTOR 2SC2458	

NOTE:

The components identified by shading and mark ⚠ are critical for safety. Replace only with part number specified.

When indicating parts by reference number, please include the board name.

Ref.No	Part No.	Description	Remark
Q026	=>8-729-245-83	TRANSISTOR 2SC2458	
Q027	=>8-729-245-83	TRANSISTOR 2SC2458	
Q028	8-729-374-02	TRANSISTOR 2SB740	
Q029	=>8-729-177-43	TRANSISTOR 2SD774	
Q030	8-729-374-02	TRANSISTOR 2SB740	
Q031	=>8-729-177-43	TRANSISTOR 2SD774	
Q032	=>8-729-245-83	TRANSISTOR 2SC2458	
Q033	=>8-729-245-83	TRANSISTOR 2SC2458	
Q034	=>8-729-245-83	TRANSISTOR 2SC2458	
Q035	=>8-729-245-83	TRANSISTOR 2SC2458	
Q036	=>8-729-245-83	TRANSISTOR 2SC2458	
Q037	=>8-729-245-83	TRANSISTOR 2SC2458	
Q038	=>8-729-204-83	TRANSISTOR 2SA1048-GR	
Q301	=>8-729-177-43	TRANSISTOR 2SD774	
Q302	=>8-729-245-83	TRANSISTOR 2SC2458	
Q305	=>8-729-245-83	TRANSISTOR 2SC2458	
Q306	=>8-729-204-83	TRANSISTOR 2SA1048-GR	
Q307	=>8-729-245-83	TRANSISTOR 2SC2458	
Q308	=>8-729-245-83	TRANSISTOR 2SC2458	
Q309	=>8-729-245-83	TRANSISTOR 2SC2458	
Q310	=>8-729-245-83	TRANSISTOR 2SC2458	
Q311	=>8-729-245-83	TRANSISTOR 2SC2458	
Q312	=>8-729-245-83	TRANSISTOR 2SC2458	
Q313	=>8-729-245-83	TRANSISTOR 2SC2458	
Q314	=>8-729-245-83	TRANSISTOR 2SC2458	
Q315	=>8-729-245-83	TRANSISTOR 2SC2458	
Q316	=>8-729-245-83	TRANSISTOR 2SC2458	
Q317	=>8-729-245-83	TRANSISTOR 2SC2458	
Q318	=>8-729-245-83	TRANSISTOR 2SC2458	
Q319	=>8-729-204-83	TRANSISTOR 2SA1048-GR	
Q320	=>8-729-177-43	TRANSISTOR 2SD774	
Q321	⚠8-729-117-52	TRANSISTOR 2SA1175	
Q322	⚠8-729-805-13	TRANSISTOR 2SC1475-13	
Q323	=>8-729-245-83	TRANSISTOR 2SC2458	
Q324	=>8-729-245-83	TRANSISTOR 2SC2458	
Q325	=>8-729-204-83	TRANSISTOR 2SA1048-GR	
Q326	=>8-729-204-83	TRANSISTOR 2SA1048-GR	
Q327	=>8-729-245-83	TRANSISTOR 2SC2458	
Q328	=>8-729-245-83	TRANSISTOR 2SC2458	
Q330	=>8-729-204-83	TRANSISTOR 2SA1048-GR	
Q601	=>8-729-245-83	TRANSISTOR 2SC2458	
Q602	8-729-900-89	TRANSISTOR DTC144ES	
Q603	8-729-900-89	TRANSISTOR DTC144ES	
Q604	=>8-729-177-43	TRANSISTOR 2SD774	
Q605	8-729-116-42	TRANSISTOR 2SD1164	
Q606	8-729-900-89	TRANSISTOR DTC144ES	
Q607	8-729-900-89	TRANSISTOR DTC144ES	
Q608	=>8-729-177-43	TRANSISTOR 2SD774	
Q609	8-729-116-42	TRANSISTOR 2SD1164	
Q610	8-729-900-89	TRANSISTOR DTC144ES	
Q611	=>8-729-245-83	TRANSISTOR 2SC2458	
Q612	=>8-729-245-83	TRANSISTOR 2SC2458	
Q613	=>8-729-245-83	TRANSISTOR 2SC2458	
Q614	8-729-900-89	TRANSISTOR DTC144ES	
Q615	8-729-987-42	TRANSISTOR 2SA874	
Q616	=>8-729-204-83	TRANSISTOR 2SA1048-GR	
Q617	=>8-729-204-83	TRANSISTOR 2SA1048-GR	
Q618	=>8-729-204-83	TRANSISTOR 2SA1048-GR	
Q619	=>8-729-204-83	TRANSISTOR 2SA1048-GR	
Q620	=>8-729-204-83	TRANSISTOR 2SA1048-GR	
Q621	=>8-729-204-83	TRANSISTOR 2SA1048-GR	
Q622	=>8-729-245-83	TRANSISTOR 2SC2458	
Q623	=>8-729-245-83	TRANSISTOR 2SC2458	
Q624	=>8-729-245-83	TRANSISTOR 2SC2458	
Q901	=>8-729-245-83	TRANSISTOR 2SC2458	

RESISTOR

Ref.No	Part No.	Description				Remark
R001	1-247-871-00	CARBON	47K	5%	1/6W	
R002	1-247-855-00	CARBON	10K	5%	1/6W	
R003	1-247-863-00	CARBON	22K	5%	1/6W	
R004	1-246-467-00	CARBON	560	5%	1/4W	
R005	1-246-470-00	CARBON	750	5%	1/4W	
R006	1-247-855-00	CARBON	10K	5%	1/6W	
R007	1-247-871-00	CARBON	47K	5%	1/6W	
R008	1-247-855-00	CARBON	10K	5%	1/6W	
R009	1-247-871-00	CARBON	47K	5%	1/6W	
R010	1-247-871-00	CARBON	47K	5%	1/6W	
R011	1-247-871-00	CARBON	47K	5%	1/6W	
R012	1-247-850-00	CARBON	6.2K	5%	1/6W	
R013	1-247-853-00	CARBON	8.2K	5%	1/6W	
R014	1-247-871-00	CARBON	47K	5%	1/6W	
R016	1-247-859-00	CARBON	15K	5%	1/6W	
R017	1-247-871-00	CARBON	47K	5%	1/6W	
R018	1-247-871-00	CARBON	47K	5%	1/6W	
R019	1-247-865-00	CARBON	27K	5%	1/6W	
R020	1-247-831-00	CARBON	1K	5%	1/6W	
R021	1-247-855-00	CARBON	10K	5%	1/6W	
R022	1-247-847-00	CARBON	4.7K	5%	1/6W	
R023	1-247-871-00	CARBON	47K	5%	1/6W	
R024	1-247-871-00	CARBON	47K	5%	1/6W	
R025	1-246-469-00	CARBON	680	5%	1/4W	
R026	1-247-879-00	CARBON	100K	5%	1/6W	
R027	1-247-855-00	CARBON	10K	5%	1/6W	
R028	1-247-831-00	CARBON	1K	5%	1/6W	
R029	1-247-863-00	CARBON	22K	5%	1/6W	
R030	1-247-863-00	CARBON	22K	5%	1/6W	
R031	1-247-875-00	CARBON	68K	5%	1/6W	
R032	1-247-871-00	CARBON	47K	5%	1/6W	
R033	⚠1-212-366-00	METAL OXIDE	3.3	5%	1W	F
R034	⚠1-247-819-00	CARBON	330	5%	1/6W	
R035	1-247-871-00	CARBON	47K	5%	1/6W	
R036	1-247-871-00	CARBON	47K	5%	1/6W	
R037	1-247-855-00	CARBON	10K	5%	1/6W	
R037	1-247-855-00	CARBON	10K	5%	1/6W	
R038	1-247-863-00	CARBON	22K	5%	1/6W	
R039	1-247-863-00	CARBON	22K	5%	1/6W	

NOTE:

The components identified by shading and mark ⚠ are critical for safety. Replace only with part number specified.

When indicating parts by reference number, please include the board name.

SS-28

Ref.No	Part No.	Description				Remark
R040	1-247-859-00	CARBON	15K	5%	1/6W	
R041	1-247-855-00	CARBON	10K	5%	1/6W	
R042	1-247-863-00	CARBON	22K	5%	1/6W	
R043	1-247-865-00	CARBON	27K	5%	1/6W	
R044	1-247-855-00	CARBON	10K	5%	1/6W	
R045	1-247-871-00	CARBON	47K	5%	1/6W	
R046	1-247-863-00	CARBON	22K	5%	1/6W	
R047	1-247-855-00	CARBON	10K	5%	1/6W	
R048	1-247-845-00	CARBON	3.9K	5%	1/6W	
R049	1-247-831-00	CARBON	1K	5%	1/6W	
R050	1-247-873-00	CARBON	56K	5%	1/6W	
R051	1-247-831-00	CARBON	1K	5%	1/6W	
R052	1-247-869-00	CARBON	39K	5%	1/6W	
R053	1-247-871-00	CARBON	47K	5%	1/6W	
R054	1-247-855-00	CARBON	10K	5%	1/6W	
R055	1-247-871-00	CARBON	47K	5%	1/6W	
R056	1-247-871-00	CARBON	47K	5%	1/6W	
R057	1-247-855-00	CARBON	10K	5%	1/6W	
R058	1-247-871-00	CARBON	47K	5%	1/6W	
R059	1-247-871-00	CARBON	47K	5%	1/6W	
R060	1-247-855-00	CARBON	10K	5%	1/6W	
R061	1-247-863-00	CARBON	22K	5%	1/6W	
R062	1-247-863-00	CARBON	22K	5%	1/6W	
R063	1-244-865-00	CARBON	470	5%	1/2W	
R064	1-247-849-00	CARBON	5.6K	5%	1/6W	
R065	1-247-831-00	CARBON	1K	5%	1/6W	
R066 ⚠	1-212-360-00	METAL OXIDE	1	5%	1W	F
R067	1-247-849-00	CARBON	5.6K	5%	1/6W	
R068	1-247-831-00	CARBON	1K	5%	1/6W	
R069	1-244-865-00	CARBON	470	5%	1/2W	
R070	1-247-855-00	CARBON	10K	5%	1/6W	
R071	1-247-863-00	CARBON	22K	5%	1/6W	
R072	1-247-863-00	CARBON	22K	5%	1/6W	
R073	1-247-871-00	CARBON	47K	5%	1/6W	
R075	1-247-863-00	CARBON	22K	5%	1/6W	
R076	1-247-871-00	CARBON	47K	5%	1/6W	
R077	1-247-821-00	CARBON	390	5%	1/6W	
R078	1-247-855-00	CARBON	10K	5%	1/6W	
R079	1-247-855-00	CARBON	10K	5%	1/6W	
R080	1-247-855-00	CARBON	10K	5%	1/6W	
R081	1-247-903-00	CARBON	1M	5%	1/6W	
R082	1-247-831-00	CARBON	1K	5%	1/6W	
R083	1-247-903-00	CARBON	1M	5%	1/6W	
R084	1-247-879-00	CARBON	100K	5%	1/6W	
R085	1-247-879-00	CARBON	100K	5%	1/6W	
R086 ⚠	1-206-640-00	METAL OXIDE	100	5%	2W	F
R316	1-247-871-00	CARBON	47K	5%	1/6W	
R317	1-247-863-00	CARBON	22K	5%	1/6W	
R318	1-247-863-00	CARBON	22K	5%	1/6W	
R319	1-247-871-00	CARBON	47K	5%	1/6W	
R320	1-247-871-00	CARBON	47K	5%	1/6W	
R321	1-247-859-00	CARBON	15K	5%	1/6W	
R322	1-247-857-00	CARBON	12K	5%	1/6W	

Ref.No	Part No.	Description				Remark
R323	1-247-845-00	CARBON	3.9K	5%	1/6W	
R324	1-247-871-00	CARBON	47K	5%	1/6W	
R325	1-247-871-00	CARBON	47K	5%	1/6W	
R326	1-247-838-00	CARBON	2K	5%	1/6W	
R327	1-247-828-00	CARBON	750	5%	1/6W	
R328	1-247-847-00	CARBON	4.7K	5%	1/6W	
R329	1-247-855-00	CARBON	10K	5%	1/6W	
R330 ⚠	1-212-360-00	METAL OXIDE	1	5%	1W	F
R331 ⚠	1-212-849-00	FUSIBLE	4.7	5%	1/4W	F
R332	1-247-821-00	CARBON	390	5%	1/6W	
R333 ⚠	1-212-855-00	FUSIBLE	8.2	5%	1/4W	F
R334	1-247-887-00	CARBON	220K	5%	1/6W	
R335	1-247-887-00	CARBON	220K	5%	1/6W	
R336	1-247-865-00	CARBON	27K	5%	1/6W	
R337	1-247-865-00	CARBON	27K	5%	1/6W	
R338	1-247-848-00	CARBON	5.1K	5%	1/6W	
R339	1-247-867-00	CARBON	33K	5%	1/6W	
R340	1-247-867-00	CARBON	33K	5%	1/6W	
R341	1-247-855-00	CARBON	10K	5%	1/6W	
R342	1-247-856-00	CARBON	11K	5%	1/6W	
R343	1-247-872-00	CARBON	51K	5%	1/6W	
R344	1-247-847-00	CARBON	4.7K	5%	1/6W	
R345	1-247-873-00	CARBON	56K	5%	1/6W	
R346	1-247-900-00	CARBON	750K	5%	1/6W	
R347	1-247-837-00	CARBON	1.8K	5%	1/6W	
R348	1-247-855-00	CARBON	10K	5%	1/6W	
R349	1-247-871-00	CARBON	47K	5%	1/6W	
R350	1-247-825-00	CARBON	560	5%	1/6W	
R351	1-247-842-00	CARBON	3K	5%	1/6W	
R352	1-247-843-00	CARBON	3.3K	5%	1/6W	
R353 ⚠	1-212-850-00	FUSIBLE	5.1	5%	1/4W	F
R354 ⚠	1-206-482-00	METAL OXIDE	62	5%	2W	F
R355 ⚠	1-212-857-00	FUSIBLE	10	5%	1/4W	F
R356	1-247-859-00	CARBON	15K	5%	1/6W	
R357	1-247-823-00	CARBON	470	5%	1/6W	
R358	1-247-855-00	CARBON	10K	5%	1/6W	
R359	1-247-831-00	CARBON	1K	5%	1/6W	
R360	1-247-903-00	CARBON	1M	5%	1/6W	
R361	1-247-855-00	CARBON	10K	5%	1/6W	
R362	1-247-831-00	CARBON	1K	5%	1/6W	
R363	1-247-903-00	CARBON	1M	5%	1/6W	
R364	1-247-871-00	CARBON	47K	5%	1/6W	
R365	1-247-855-00	CARBON	10K	5%	1/6W	
R366	1-247-871-00	CARBON	47K	5%	1/6W	
R367	1-247-829-00	CARBON	820	5%	1/6W	
R368	1-247-880-00	CARBON	110K	5%	1/6W	
R369	1-247-839-00	CARBON	2.2K	5%	1/6W	
R370	1-247-839-00	CARBON	2.2K	5%	1/6W	
R371	1-247-847-00	CARBON	4.7K	5%	1/6W	
R372	1-247-855-00	CARBON	10K	5%	1/6W	
R373	1-247-891-00	CARBON	330K	5%	1/6W	
R374	1-247-891-00	CARBON	330K	5%	1/6W	
R375	1-247-863-00	CARBON	22K	5%	1/6W	

NOTE:

The components identified by shading and mark ⚠ are critical for safety. Replace only with part number specified.

When indicating parts by reference number, please include the board name.

Ref.No	Part No.	Description				Remark
R376	1-247-849-00	CARBON	5.6K	5%	1/6W	
R377	1-247-855-00	CARBON	10K	5%	1/6W	
R378	1-247-835-00	CARBON	1.5	5%	1/6W	
R379	1-247-855-00	CARBON	10KK	5%	1/6W	
R380	1-247-819-00	CARBON	330	5%	1/6W	
R381	1-247-871-00	CARBON	47K	5%	1/6W	
R382	1-247-879-00	CARBON	100K	5%	1/6W	
R383	1-247-849-00	CARBON	5.6K	5%	1/6W	
R384	1-247-857-00	CARBON	12K	5%	1/6W	
R385	1-247-855-00	CARBON	10K	5%	1/6W	
R386	1-247-839-00	CARBON	2.2K	5%	1/6W	
R387	1-247-871-00	CARBON	47K	5%	1/6W	
R388	1-247-871-00	CARBON	47K	5%	1/6W	
R389	1-247-847-00	CARBON	4.7K	5%	1/6W	
R390	1-247-859-00	CARBON	15K	5%	1/6W	
R391	1-247-855-00	CARBON	10K	5%	1/6W	
R392	1-247-871-00	CARBON	47K	5%	1/6W	
R393	1-247-867-00	CARBON	33K	5%	1/6W	
R394	1-247-879-00	CARBON	100K	5%	1/6W	
R395	1-247-879-00	CARBON	100K	5%	1/6W	
R396	1-247-887-00	CARBON	220K	5%	1/6W	
R397	1-247-867-00	CARBON	33K	5%	1/6W	
R398	1-247-883-00	CARBON	150K	5%	1/6W	
R399	1-247-883-00	CARBON	150K	5%	1/6W	
R400	1-247-857-00	CARBON	12K	5%	1/6W	
R401	1-247-879-00	CARBON	100K	5%	1/6W	
R402	1-247-879-00	CARBON	100K	5%	1/6W	
R403	1-247-883-00	CARBON	150K	5%	1/6W	
R404	1-247-855-00	CARBON	10K	5%	1/6W	
R405	1-247-867-00	CARBON	33K	5%	1/6W	
R406	1-247-883-00	CARBON	150K	5%	1/6W	
R407	1-247-871-00	CARBON	47K	5%	1/6W	
R408	1-247-867-00	CARBON	33K	5%	1/6W	
R409	1-247-897-00	CARBON	560K	5%	1/6W	
R410	1-247-847-00	CARBON	4.7K	5%	1/6W	
R411	1-247-871-00	CARBON	47K	5%	1/6W	
R412	1-247-897-00	CARBON	560K	5%	1/6W	
R413	1-247-867-00	CARBON	33K	5%	1/6W	
R414	1-247-868-00	CARBON	36K	5%	1/6W	
R415	1-247-832-00	CARBON	1.1K	5%	1/6W	
R416	1-247-857-00	CARBON	12K	5%	1/6W	
R417	1-247-866-00	CARBON	30K	5%	1/6W	
R418	1-247-871-00	CARBON	47K	5%	1/6W	
R419	1-247-855-00	CARBON	10K	5%	1/6W	
R420	1-247-871-00	CARBON	47K	5%	1/6W	
R421	1-247-871-00	CARBON	47K	5%	1/6W	
R422	1-247-823-00	CARBON	470	5%	1/6W	
R423	1-247-847-00	CARBON	4.7K	5%	1/6W	
R424	⚠ 1-212-360-00	METAL OXIDE	1	5%	1W	F
R426	1-247-871-00	CARBON	47K	5%	1/6W	
R427	1-247-855-00	CARBON	10K	5%	1/6W	
R428	1-247-879-00	CARBON	100K	5%	1/6W	
R429	1-247-871-00	CARBON	47K	5%	1/6W	

Ref.No	Part No.	Description				Remark
R430	1-247-859-00	CARBON	15K	5%	1/6W	
R431	1-247-871-00	CARBON	47K	5%	1/6W	
R432	1-247-859-00	CARBON	15K	5%	1/6W	
R433	1-247-871-00	CARBON	47K	5%	1/6W	
R434	1-247-855-00	CARBON	10K	5%	1/6W	
R435	1-247-871-00	CARBON	47K	5%	1/6W	
R436	1-247-831-00	CARBON	1K	5%	1/6W	
R437	1-247-831-00	CARBON	1K	5%	1/6W	
R438	1-247-831-00	CARBON	1K	5%	1/6W	
R441	1-247-859-00	CARBON	15K	5%	1/6W	
R442	1-247-855-00	CARBON	10K	5%	1/6W	
R443	1-247-825-00	CARBON	560	5%	1/6W	
R444	1-247-871-00	CARBON	47K	5%	1/6W	
R601	1-247-831-00	CARBON	1K	5%	1/6W	
R602	1-247-871-00	CARBON	47K	5%	1/6W	
R603	1-247-869-00	CARBON	39K	5%	1/6W	
R604	1-247-862-00	CARBON	20K	5%	1/6W	
R605	1-247-862-00	CARBON	20K	5%	1/6W	
R606	1-247-873-00	CARBON	56K	5%	1/6W	
R607	1-247-869-00	CARBON	39K	5%	1/6W	
R608	1-247-829-00	CARBON	820	5%	1/6W	
R609	1-247-829-00	CARBON	820	5%	1/6W	
R610	1-247-869-00	CARBON	39K	5%	1/6W	
R611	1-247-829-00	CARBON	820	5%	1/6W	
R612	1-247-829-00	CARBON	820	5%	1/6W	
R613	1-247-869-00	CARBON	39K	5%	1/6W	
R614	1-247-869-00	CARBON	39K	5%	1/6W	
R615	1-247-827-00	CARBON	680	5%	1/6W	
R616	1-247-853-00	CARBON	8.2K	5%	1/6W	
R617	1-247-855-00	CARBON	10K	5%	1/6W	
R618	1-247-853-00	CARBON	8.2K	5%	1/6W	
R619	1-247-853-00	CARBON	8.2K	5%	1/6W	
R620	1-247-853-00	CARBON	8.2K	5%	1/6W	
R621	1-247-853-00	CARBON	8.2K	5%	1/6W	
R622	1-247-849-00	CARBON	5.6K	5%	1/6W	
R623	1-247-855-00	CARBON	10K	5%	1/6W	
R624	1-247-842-00	CARBON	3K	5%	1/6W	
R625	1-247-807-00	CARBON	100	5%	1/6W	
R626	1-247-873-00	CARBON	56K	5%	1/6W	
R627	1-247-863-00	CARBON	22K	5%	1/6W	
R628	1-247-809-00	CARBON	120	5%	1/6W	
R629	1-247-830-00	CARBON	910	5%	1/6W	
R630	1-247-863-00	CARBON	22K	5%	1/6W	
R631	1-247-855-00	CARBON	10K	5%	1/6W	
R632	1-247-839-00	CARBON	2.2K	5%	1/6W	
R633	1-247-839-00	CARBON	2.2K	5%	1/6W	
R634	1-247-839-00	CARBON	2.2K	5%	1/6W	
R635	1-247-839-00	CARBON	2.2K	5%	1/6W	
R636	1-247-839-00	CARBON	2.2K	5%	1/6W	
R637	1-247-839-00	CARBON	2.2K	5%	1/6W	
R638	1-247-855-00	CARBON	10K	5%	1/6W	
R639	1-247-855-00	CARBON	10K	5%	1/6W	
R640	1-247-855-00	CARBON	10K	5%	1/6W	

NOTE:

The components identified by shading and mark ⚠ are critical for safety. Replace only with part number specified.

When indicating parts by reference number, please include the board name.

SS-28 FU-22 MT-4

Ref.No	Part No.	Description				Remark
R641	1-247-855-00	CARBON	10K	5%	1/6W	
R642	1-247-855-00	CARBON	10K	5%	1/6W	
R643	1-247-829-00	CARBON	820	5%	1/6W	
R644	1-247-829-00	CARBON	820	5%	1/6W	
R645	1-247-829-00	CARBON	820	5%	1/6W	
R646	1-247-829-00	CARBON	820	5%	1/6W	
R647	1-247-829-00	CARBON	820	5%	1/6W	
R648	1-247-829-00	CARBON	820	5%	1/6W	
R649	1-247-829-00	CARBON	820	5%	1/6W	
R650	1-247-853-00	CARBON	8.2K	5%	1/6W	
R651	1-247-871-00	CARBON	47K	5%	1/6W	
R652	1-247-847-00	CARBON	4.7K	5%	1/6W	
R653	1-247-831-00	CARBON	1K	5%	1/6W	
R654	1-247-831-00	CARBON	1K	5%	1/6W	
R655	1-247-831-00	CARBON	1K	5%	1/6W	
R656	1-247-871-00	CARBON	47K	5%	1/6W	
R657	1-247-869-00	CARBON	39K	5%	1/6W	
R658	1-247-839-00	CARBON	2.2K	5%	1/6W	
R901	1-247-871-00	CARBON	47K	5%	1/6W	
R902	1-247-863-00	CARBON	22K	5%	1/6W	
R903	1-247-841-00	CARBON	2.7K	5%	1/6W	

VARIABLE RESISTOR

RV001	1-228-991-00	RES, ADJ, METAL GLAZE	2.2K
RV301	1-224-254-XX	RES, ADJ, METAL GLAZE	47K
RV302	1-228-750-00	RES, ADJ, CARBON	47K
RV303	1-228-750-00	RES, ADJ, CARBON	47K
RV304	1-228-991-00	RES, ADJ, METAL GLAZE	2.2K
RV305	1-228-750-00	RES, ADJ, CARBON	47K
RV306	1-228-994-00	RES, ADJ, METAL GLAZE	10K
RV307	1-228-994-00	RES, ADJ, METAL GLAZE	10K

THERMISTOR

TH001	1-800-202-XX	THERMISTOR S-10K
TH002	1-800-202-XX	THERMISTOR S-10K
TH301	1-800-198-XX	THERMISTOR S-1K
TH302	1-800-200-00	THERMISTOR S-3K

PIN LEAD

TP301	3-846-049-11	PIN, LEAD
TP302	3-846-049-11	PIN, LEAD
TP303	3-846-049-11	PIN, LEAD
TP304	3-846-049-11	PIN, LEAD
TP305	3-846-049-11	PIN, LEAD
TP306	3-846-049-11	PIN, LEAD
TP307	3-846-049-11	PIN, LEAD
TP308	3-846-049-11	PIN, LEAD
TP309	3-846-049-11	PIN, LEAD
TP601	3-846-049-11	PIN, LEAD
TP602	3-846-049-11	PIN, LEAD

****

Ref.No	Part No.	Description	Remark
	1-612-323-11	FU-22 BOARD	
		**********	
	3-674-372-00	HOLDER (A), LED	
	3-684-040-01	HOLDER (T), LED	
	3-684-058-01	SPACER, LED	

CONNECTOR

CN301	1-564-019-11	PIN, CONNECTOR 9P	
CN302	1-564-017-00	PIN, CONNECTOR 7P	

DIODE

D301	8-719-812-31	DIODE TLR123	
D302	8-719-812-30	DIODE TL0123	
D303	8-719-812-32	DIODE TLY123	
D304	8-719-812-32	DIODE TLY123	
D305	8-719-812-33	DIODE TLG123A	
D306	8-719-812-30	DIODE TL0123	
D307	8-719-812-33	DIODE TLG123A	
D308	8-719-906-49	DIODE LT-9230N	
D309	8-719-812-33	DIODE TLG123A	

RESISTOR

R301	1-247-811-00	CARBON	150	5%	1/6W	
R302	1-247-817-00	CARBON	270	5%	1/6W	
R303	1-247-811-00	CARBON	150	5%	1/6W	
R304	1-247-807-00	CARBON	100	5%	1/6W	
R305	1-247-811-00	CARBON	150	5%	1/6W	
R306	1-247-811-00	CARBON	150	5%	1/6W	
R307	1-247-811-00	CARBON	150	5%	1/6W	
R308	1-247-811-00	CARBON	150	5%	1/6W	
R309	1-247-815-00	CARBON	220	5%	1/6W	

VARIABLE RESISTOR

RV301	1-228-988-00	RES, VAR, CARBON 10K/10K

SWITCH

S301	1-553-997-00	SWITCH, KEY BOARD
S302	1-553-997-00	SWITCH, KEY BOARD
S303	1-553-997-00	SWITCH, KEY BOARD
S304	1-553-997-00	SWITCH, KEY BOARD
S305	1-553-997-00	SWITCH, KEY BOARD
S306	1-553-997-00	SWITCH, KEY BOARD
S307	1-553-997-00	SWITCH, KEY BOARD
S308	1-553-997-00	SWITCH, KEY BOARD

****

	1-610-400-00	MT-4 BOARD
		**********
⚠	1-463-350-12	TUNER (BT-881)

****

NOTE:

The components identified by shading and mark ⚠ are critical for safety. Replace only with part number specified.

When indicating parts by reference number, please include the board name.

Ref.No	Part No.	Description			Remark
	♣:A-6721-201-A	TU-60 BOARD, COMPLETE			
		**********			
	♣:3-662-227-00	HOLDER (R-3), LED			
	♣:3-674-390-00	HOLDER (B), LED			
	♣:3-681-220-00	BAND, RETAINER, TUNER			
	♣:3-681-233-00	CASE, SHIELD (MAIN), TU			
	♣:3-684-073-01	LID, UPPER, TU SHIELD CASE (S)			
	♣:3-684-074-01	LID, BOTTOM,			
C001	1-102-529-00	CERAMIC	100PF	5%	50V
C002	1-102-527-00	CERAMIC	82PF	5%	50V
C003	1-102-949-00	CERAMIC	12PF	5%	50V
C004	1-102-523-00	CERAMIC	56PF	5%	50V
C005	1-161-030-00	CERAMIC	0.0047MF	20%	25V
C006	1-161-030-00	CERAMIC	0.0047MF	20%	25V
C007	1-161-030-00	CERAMIC	0.0047MF	20%	25V
C008	1-161-030-00	CERAMIC	0.0047MF	20%	25V
C009	1-123-380-00	ELECT	1MF	20%	50V
C010	1-123-356-00	ELECT	10MF	20%	16V
C011	1-161-030-00	CERAMIC	0.0047MF	20%	25V
C012	1-161-030-00	CERAMIC	0.0047MF	20%	25V
C013	1-161-036-00	CERAMIC	0.047MF	20%	25V
C014	1-102-529-00	CERAMIC	100PF	5%	50V
C015	1-123-332-00	ELECT	47MF	20%	16V
C016	1-101-004-00	CERAMIC	0.01MF		50V
C017	1-102-979-00	CERAMIC	24PF	5%	50V
C018	1-161-034-00	CERAMIC	0.022MF	20%	25V
C019	1-123-352-00	ELECT	1MF	20%	50V
C020	1-161-030-00	CERAMIC	0.0047MF	20%	25V
C021	1-123-286-00	ELECT	0.33MF	20%	50V
C022	1-161-032-00	CERAMIC	0.01MF	20%	25V
C023	1-101-361-00	CERAMIC	150PF	10%	50V
C024	1-123-380-00	ELECT	1MF	20%	50V
C025	1-104-077-00	POLYSTYRENE	0.001MF	5%	50V
C026	1-161-034-00	CERAMIC	0.022MF	20%	25V
C027	1-161-034-00	CERAMIC	0.022MF	20%	25V
C028	1-161-034-00	CERAMIC	0.022MF	20%	25V
C029	1-130-478-00	MYLAR	0.0039MF	5%	50V
C030	1-130-478-00	MYLAR	0.0039MF	5%	50V
C031	1-130-478-00	MYLAR	0.0039MF	5%	50V
C032	1-123-380-00	ELECT	1MF	20%	50V
C033	1-123-330-00	ELECT	22MF	20%	16V
C034	1-123-380-00	ELECT	1MF	20%	50V
C035	1-123-332-00	ELECT	47MF	20%	16V
C036	1-123-332-00	ELECT	47MF	20%	16V
C037	1-123-330-00	ELECT	22MF	20%	16V
C038	1-123-356-00	ELECT	10MF	20%	16V
C039	1-161-036-00	CERAMIC	0.047MF	20%	25V
C040	1-104-089-00	POLYSTYRENE	0.0033MF	5%	50V
C041	1-104-077-00	POLYSTYRENE	0.001MF	5%	50V
C042	1-161-036-00	CERAMIC	0.047MF	20%	25V
C043	1-161-034-00	CERAMIC	0.022MF	20%	25V
C044	1-136-244-11	FILM	0.1MF	2%	50V

Ref.No	Part No.	Description			Remark
C045	1-136-244-11	FILM	0.1MF	2%	50V
C046	1-123-308-00	ELECT	220MF	20%	10V
C047	1-136-243-11	FILM	0.047MF	2%	50V
C048	1-136-243-11	FILM	0.047MF	2%	50V
C101	1-102-963-00	CERAMIC	33PF	10%	50V
C102	1-102-963-00	CERAMIC	33PF	10%	50V
C103	1-123-381-00	ELECT	2.2MF	20%	50V
C104	1-161-036-00	CERAMIC	0.047MF	20%	25V
C105	1-161-271-00	CERAMIC	100PF	5%	50V
C106	1-130-495-00	MYLAR	0.1MF	5%	50V
C107	1-130-493-00	MYLAR	0.068MF	5%	50V
C108	1-130-493-00	MYLAR	0.068MF	5%	50V
C109	1-102-963-00	CERAMIC	33PF	10%	50V
C110	1-123-356-00	ELECT	10MF	20%	16V
C111	1-101-004-00	CERAMIC	0.01MF		50V
C112	1-123-356-00	ELECT	10MF	20%	16V
C201	1-101-004-00	CERAMIC	0.01MF		50V
C202	1-123-332-00	ELECT	47MF	20%	16V
C203	1-123-332-00	ELECT	47MF	20%	16V
C204	1-101-004-00	CERAMIC	0.01MF		50V
C205	1-123-356-00	ELECT	10MF	20%	16V
C206	1-123-380-00	ELECT	1MF	20%	50V
C207	1-123-356-00	ELECT	10MF	20%	16V
C208	1-101-004-00	CERAMIC	0.01MF		50V
C209	1-101-004-00	CERAMIC	0.01MF		50V
C221	1-123-330-00	ELECT	22MF	20%	16V
C301	1-123-328-00	ELECT	4.7MF	20%	25V
C302	1-123-328-00	ELECT	4.7MF	20%	25V
C303	1-123-333-00	ELECT	100MF	20%	16V
C403	1-123-332-00	ELECT	47MF	20%	16V
C404	1-123-328-00	ELECT	4.7MF	20%	25V

FILTER

CF001	1-527-840-00	FILTER, CERAMIC
CF002	1-527-839-00	FILTER, CERAMIC
CF101	1-527-822-00	OSCILLATOR, CERAMIC

CONNECTOR

CN001	♣:1-560-893-00	PIN, CONNECTOR 5P
CN002	♣:1-560-892-00	PIN, CONNECTOR 4P
CN003	♣:1-560-892-00	PIN, CONNECTOR 4P
CN101	♣:1-560-900-00	PIN, CONNECTOR 12P
CN102	♣:1-560-892-00	PIN, CONNECTOR 4P
CN201	♣:1-560-892-00	PIN, CONNECTOR 4P

TRIMMER

CT001	1-404-134-00	TRAP, CERAMIC (5.5MHZ)

DIODE

D001	8-719-911-19	DIODE 1SS119
D102	8-719-911-19	DIODE 1SS119
D103	8-719-812-31	DIODE TLR123

When indicating parts by reference number, please include the board name.

TU-60

Ref.No	Part No.	Description	Remark
D104	8-719-812-31	DIODE TLR123	
D105	8-719-812-31	DIODE TLR123	
D106	8-719-812-32	DIODE TLY123	
D107	8-719-812-33	DIODE TLG123A	
D201	8-719-000-12	DIODE MC931	
D402	8-719-911-19	DIODE 1SS119	
		IC	
IC001	8-759-909-08	IC TDA3541	
IC002	8-759-909-54	IC TDA2546A	
IC003	6-066-721-60	IC TDA3800AS	
IC004	8-759-145-58	IC UPC4558C	
IC101	8-759-600-98	IC M50160-018SP	
IC102	8-759-600-66	IC M58653P	
IC103	8-759-600-15	IC M54570L	
IC201	8-759-157-40	IC UPC574J	
		COIL	
L001	1-408-592-00	MICRO INDUCTOR 1.2UH	
L002	1-408-591-00	MICRO INDUCTOR 1UH	
L003	1-408-591-00	MICRO INDUCTOR 1UH	
L004	1-408-600-00	MICRO INDUCTOR 5.6UH	
L005	1-408-599-00	MICRO INDUCTOR 4.7UH	
L006	1-408-597-00	MICRO INDUCTOR 3.3UH	
L007	1-408-591-00	MICRO INDUCTOR 1UH	
L008	1-408-591-00	MICRO INDUCTOR 1UH	
		TRANSISTOR	
Q001	=>8-729-203-28	TRANSISTOR 2SC2216	
Q002	=>8-729-245-83	TRANSISTOR 2SC2458	
Q003	8-729-900-74	TRANSISTOR DTC143TS	
Q004	8-729-900-74	TRANSISTOR DTC143TS	
Q101	=>8-729-245-83	TRANSISTOR 2SC2458	
Q102	=>8-729-245-83	TRANSISTOR 2SC2458	
Q103	8-729-900-89	TRANSISTOR DTC144ES	
Q201	8-729-900-89	TRANSISTOR DTC144ES	
Q202	8-729-103-43	TRANSISTOR 2SB734	
Q203	8-729-900-89	TRANSISTOR DTC144ES	
Q301	=>8-729-204-83	TRANSISTOR 2SA1048-GR	
Q302	=>8-729-204-83	TRANSISTOR 2SA1048-GR	
Q303	=>8-729-204-83	TRANSISTOR 2SA1048-GR	
Q401	=>8-729-204-83	TRANSISTOR 2SA1048-GR	
Q402	=>8-729-204-83	TRANSISTOR 2SA1048-GR	
Q403	8-729-900-61	TRANSISTOR DTA114ES	
		RESISTOR	
R001	1-247-819-00	CARBON 330 5% 1/6W	
R002	1-247-847-00	CARBON 4.7K 5% 1/6W	
R003	1-247-839-00	CARBON 2.2K 5% 1/6W	
R004	1-247-815-00	CARBON 220 5% 1/6W	
R005	1-247-813-00	CARBON 180 5% 1/6W	
R006	1-247-869-00	CARBON 39K 5% 1/6W	
R009	1-247-843-00	CARBON 3.3K 5% 1/6W	
R010	1-247-853-00	CARBON 8.2K 5% 1/6W	
R011	1-247-879-00	CARBON 100K 5% 1/6W	
R012	1-247-871-00	CARBON 47K 5% 1/6W	
R013	1-247-871-00	CARBON 47K 5% 1/6W	
R014	1-247-831-00	CARBON 1K 5% 1/6W	
R015	1-247-813-00	CARBON 180 5% 1/6W	
R016	1-247-824-00	CARBON 510 5% 1/6W	
R017	1-247-821-00	CARBON 390 5% 1/6W	
R018	1-247-823-00	CARBON 470 5% 1/6W	
R019	1-247-835-00	CARBON 1.5K 5% 1/6W	
R020	1-247-829-00	CARBON 820 5% 1/6W	
R021	1-247-829-00	CARBON 820 5% 1/6W	
R022	1-247-829-00	CARBON 820 5% 1/6W	
R023	1-247-847-00	CARBON 4.7K 5% 1/6W	
R024	1-247-853-00	CARBON 8.2K 5% 1/6W	
R025	1-247-841-00	CARBON 2.7K 5% 1/6W	
R026	1-247-841-00	CARBON 2.7K 5% 1/6W	
R027	1-247-853-00	CARBON 8.2K 5% 1/6W	
R028	1-247-831-00	CARBON 1K 5% 1/6W	
R029	1-247-863-00	CARBON 22K 5% 1/6W	
R030	1-247-839-00	CARBON 2.2K 5% 1/6W	
R031	1-247-865-00	CARBON 27K 5% 1/6W	
R032	1-247-829-00	CARBON 820 5% 1/6W	
R033	1-215-465-00	METAL 68K 1% 1/6W	
R034	1-215-409-00	METAL 330 1% 1/6W	
R035	1-215-487-00	METAL 560K 1% 1/6W	
R037	1-215-462-00	METAL 51K 1% 1/6W	
R038	1-215-408-00	METAL 300 1% 1/6W	
R039	1-215-486-00	METAL 510K 1% 1/6W	
R041	1-246-489-00	CARBON 4.7K 5% 1/4W	
R101	1-246-505-00	CARBON 22K 5% 1/4W	
R102	1-246-505-00	CARBON 22K 5% 1/4W	
R103	1-246-505-00	CARBON 22K 5% 1/4W	
R104	1-246-497-00	CARBON 10K 5% 1/4W	
R105	1-246-497-00	CARBON 10K 5% 1/4W	
R106	1-246-497-00	CARBON 10K 5% 1/4W	
R107	1-246-497-00	CARBON 10K 5% 1/4W	
R108	1-246-497-00	CARBON 10K 5% 1/4W	
R109	1-246-497-00	CARBON 10K 5% 1/4W	
R111	1-246-472-00	CARBON 910 5% 1/4W	
R112	1-246-472-00	CARBON 910 5% 1/4W	
R113	1-246-505-00	CARBON 22K 5% 1/4W	
R114	1-246-505-00	CARBON 22K 5% 1/4W	
R115	1-246-505-00	CARBON 22K 5% 1/4W	
R116	1-246-505-00	CARBON 22K 5% 1/4W	
R117	1-246-505-00	CARBON 22K 5% 1/4W	
R118	1-247-891-00	CARBON 330K 5% 1/6W	
R119	1-247-839-00	CARBON 2.2K 5% 1/6W	
R120	1-246-505-00	CARBON 22K 5% 1/4W	
R121	1-247-839-00	CARBON 2.2K 5% 1/6W	
R122	1-246-477-00	CARBON 1.5K 5% 1/4W	
R123	1-246-475-00	CARBON 1.2K 5% 1/4W	

When indicating parts by reference number, please include the board name.

Ref.No	Part No.	Description				Remark
R124	1-246-521-00	CARBON	100K	5%	1/4W	
R125	1-246-505-00	CARBON	22K	5%	1/4W	
R128	1-247-853-00	CARBON	8.2K	5%	1/6W	
R201	1-246-509-00	CARBON	33K	5%	1/4W	
R202	1-247-863-00	CARBON	22K	5%	1/6W	
R203	1-247-847-00	CARBON	4.7K	5%	1/6W	
R204	1-247-831-00	CARBON	1K	5%	1/6W	
R206	1-247-843-00	CARBON	3.3K	5%	1/6W	
R207	1-247-851-00	CARBON	6.8K	5%	1/6W	
R208	⚠1-206-670-00	METAL OXIDE	1.8K	5%	2W	F
R209	1-246-509-00	CARBON	33K	5%	1/4W	
R210	1-246-505-00	CARBON	22K	5%	1/4W	
R221	1-247-839-00	CARBON	2.2K	5%	1/6W	
R222	1-247-863-00	CARBON	22K	5%	1/6W	
R223	1-247-871-00	CARBON	47K	5%	1/6W	
R224	1-246-533-00	CARBON	330K	5%	1/4W	
R301	1-247-843-00	CARBON	3.3K	5%	1/6W	
R302	1-247-843-00	CARBON	3.3K	5%	1/6W	
R303	1-247-809-00	CARBON	120	5%	1/6W	
R304	1-247-863-00	CARBON	22K	5%	1/6W	
R305	1-247-853-00	CARBON	8.2K	5%	1/6W	
R306	1-247-801-00	CARBON	56	5%	1/6W	
R308	1-246-457-00	CARBON	220	5%	1/4W	
R401	1-246-505-00	CARBON	22K	5%	1/4W	
R402	1-247-879-00	CARBON	100K	5%	1/6W	
R403	1-246-505-00	CARBON	22K	5%	1/4W	
R404	1-247-871-00	CARBON	47K	5%	1/6W	
R405	1-246-509-00	CARBON	33K	5%	1/4W	

VARIABLE RESISTOR

RV001	1-228-750-00	RES, ADJ, CARBON 47K
RV002	1-228-995-00	RES, ADJ, METAL GLAZE 22K

SWITCH

S101	1-553-997-00	SWITCH, KEY BOARD
S102	1-553-997-00	SWITCH, KEY BOARD
S103	1-553-997-00	SWITCH, KEY BOARD
S104	1-553-997-00	SWITCH, KEY BOARD
S105	1-553-997-00	SWITCH, KEY BOARD
S106	1-553-997-00	SWITCH, KEY BOARD
S107	1-553-997-00	SWITCH, KEY BOARD
S201	1-516-226-00	SLIDE SWITCH

FILTER

SWF001	1-404-438-00	FILTER, SAW

TRANSFORMER

T002	1-404-068-00	COIL, VIF
T003	1-404-068-00	COIL, VIF
T004	1-404-378-00	I.F.T
T005	1-404-378-00	I.F.T
T006	1-404-135-00	COIL, SIF DISCRI
T007	1-404-378-00	I.F.T
T008	1-404-135-00	COIL, SIF DISCRI
T009	1-404-343-00	COIL, IF

****

♣1-612-327-11	TR-14 BOARD	
	**********	

VARIABLE RESISTOR

RV701	1-228-603-00	RES, VAR, CARBON 100K

****

♣1-609-227-11	CS-3 BOARD	
	**********	

CONNECTOR

CN301	♣1-564-029-00	PIN, CONNECTOR 4P

SWITCH

S301	1-554-241-00	SWITCH, LEVER

****

♣1-609-228-11	CS-4 BOARD	
	**********	

SWITCH

S302	1-554-241-00	SWITCH, LEVER

****

♣1-610-401-00	RD-6 BOARD	
	**********	
♣3-681-157-00	HOLDER, RD	

DIODE

D001	8-719-921-03	DIODE GP-2S02A

****

♣1-610-402-00	RD-7 BOARD	
	**********	

DIODE

D001	8-719-921-03	DIODE GP-2S02A

****

♣1-612-324-11	HP-7 BOARD	
	**********	

JACK

JK401	1-507-833-00	JACK

NOTE:

The components identified by shading and mark ⚠ are critical for safety. Replace only with part number specified.

When indicating parts by reference number, please include the board name.

RL-18 TM-54

Ref.No	Part No.	Description				Remark
	♦:1-612-330-11	RL-18 BOARD				
		**********				
		CAPACITOR				
C801	1-123-356-00	ELECT	10MF	20%	16V	
C802	1-123-356-00	ELECT	10MF	20%	16V	
C803	1-161-039-00	CERAMIC	0.001MF	10%	25V	
C804	1-161-039-00	CERAMIC	0.001MF	10%	25V	
C805	1-123-356-00	ELECT	10MF	20%	16V	
		CONNECTOR				
CN801	♦:1-564-017-00	PIN, CONNECTOR 7P				
CN802	♦:1-564-022-00	PIN, CONNECTOR 12P				
CN803	♦:1-564-017-00	PIN, CONNECTOR 7P				
		DIODE				
D801	8-719-911-19	DIODE 1SS119				
D802	8-719-911-19	DIODE 1SS119				
		IC				
IC801	8-759-135-80	IC UPC358C				
		RESISTOR				
R801	1-247-855-00	CARBON	10K	5%	1/6W	
R802	1-247-855-00	CARBON	10K	5%	1/6W	
R803	1-247-852-00	CARBON	7.5K	5%	1/6W	
R804	1-247-852-00	CARBON	7.5K	5%	1/6W	
R805	1-247-878-00	CARBON	91K	5%	1/6W	
R806	1-247-878-00	CARBON	91K	5%	1/6W	
R807	1-247-861-00	CARBON	18K	5%	1/6W	
R808	1-247-861-00	CARBON	18K	5%	1/6W	
R809	1-244-853-00	CARBON	150	5%	1/2W	
**********						
	♦:A-6728-995-A	TM-54 BOARD, COMPLETE				
		**********				
		CAPACITOR				
C101	1-123-354-00	ELECT	3.3MF	20%	50V	
C102	1-161-772-11	CERAMIC	0.1MF	10%	25V	
C103	1-161-061-00	CERAMIC	0.068MF	10%	50V	
C104	1-161-772-11	CERAMIC	0.1MF	10%	25V	
C105	1-125-299-00	**********	47000MF		5V	
C106	1-123-357-00	ELECT	22MF	20%	50V	
C107	1-102-959-00	CERAMIC	22PF	5%	50V	
C108	1-123-669-51	ELECT	33MF	20%	16V	
C109	1-161-024-00	CERAMIC	0.082MF	10%	25V	
		CONNECTOR				
CN102	♦:1-564-002-00	PIN, CONNECTOR 3P				
CN104	♦:1-564-006-11	PIN, CONNECTOR 7P				
CN106	♦:1-564-027-00	PIN, CONNECTOR 2P				

Ref.No	Part No.	Description				Remark
		TRIMMER				
CT101	1-141-022-11	CAP, TRIMMER, CERAMIC	20PF			
		DIODE				
D101	8-719-812-31	DIODE TLR123				
D102	8-719-911-19	DIODE 1SS119				
D103	8-719-911-19	DIODE 1SS119				
D104	8-719-191-07	DIODE RD9.1E-B				
D105	8-719-911-19	DIODE 1SS119				
D106	8-719-911-19	DIODE 1SS119				
D107	8-719-911-19	DIODE 1SS119				
		IC				
IC101	8-759-101-97	IC UPD7519G-053				
		TRANSISTOR				
Q101	=>8-729-245-83	TRANSISTOR 2SC2458				
Q102	=>8-729-245-83	TRANSISTOR 2SC2458				
Q103	=>8-729-204-83	TRANSISTOR 2SA1048-GR				
Q104	=>8-729-245-83	TRANSISTOR 2SC2458				
		RESISTOR				
R101	1-247-875-00	CARBON	68K	5%	1/6W	
R102	1-247-879-00	CARBON	100K	5%	1/6W	
R103	1-247-855-00	CARBON	10K	5%	1/6W	
R104	1-247-855-00	CARBON	10K	5%	1/6W	
R105	1-247-855-00	CARBON	10K	5%	1/6W	
R106	1-247-855-00	CARBON	10K	5%	1/6W	
R107	1-247-855-00	CARBON	10K	5%	1/6W	
R108	1-247-855-00	CARBON	10K	5%	1/6W	
R109	1-247-855-00	CARBON	10K	5%	1/6W	
R110	1-247-855-00	CARBON	10K	5%	1/6W	
R111	1-247-855-00	CARBON	10K	5%	1/6W	
R112	1-247-867-00	CARBON	33K	5%	1/6W	
R113	1-247-872-00	CARBON	51K	5%	1/6W	
R114	1-247-886-00	CARBON	200K	5%	1/6W	
R115	1-247-903-00	CARBON	1M	5%	1/6W	
R116	1-247-868-00	CARBON	36K	5%	1/6W	
R117	1-247-874-00	CARBON	62K	5%	1/6W	
R118	1-247-869-00	CARBON	39K	5%	1/6W	
R119	1-247-879-00	CARBON	100K	5%	1/6W	
R120	1-247-855-00	CARBON	10K	5%	1/6W	
R121	1-247-867-00	CARBON	33K	5%	1/6W	
R122	1-247-863-00	CARBON	22K	5%	1/6W	
R123	1-247-831-00	CARBON	1K	5%	1/6W	
R124	1-247-843-00	CARBON	3.3K	5%	1/6W	
R125	1-247-879-00	CARBON	100K	5%	1/6W	
R126	1-247-879-00	CARBON	100K	5%	1/6W	
R127	1-247-879-00	CARBON	100K	5%	1/6W	
R128	1-247-879-00	CARBON	100K	5%	1/6W	
R129	1-247-804-00	CARBON	75	5%	1/6W	

When indicating parts by reference number, please include the board name.

Ref.No	Part No.	Description	Remark
		CRYSTAL	
X101	1-527-647-00	OSCILLATOR, CRYSTAL	
**********			
♦	A-6728-996-A	TM-55 BOARD, COMPLETE	
		**********	
♦	3-684-005-01	HOLDER (S), LED	
♦	3-684-030-01	HOLDER, INDICATION TUBE	
	7-685-134-21	SCREW +P 2.6X8 TYPE2 SLIT	
		DIODE	
D201	8-719-812-31	DIODE TLR123	
D202	8-719-812-31	DIODE TLR123	
D203	8-719-812-31	DIODE TLR123	
D204	8-719-812-31	DIODE TLR123	
		FILTER	
FL201	1-519-315-11	INDICATOR TUBE, FLUORESCENT	
		RESISTOR	
R201	1-247-815-00	CARBON 220 5% 1/6W	
R202	1-247-815-00	CARBON 220 5% 1/6W	
		SWITCH	
S201	1-553-997-00	SWITCH, KEY BOARD	
S202	1-553-997-00	SWITCH, KEY BOARD	
S203	1-553-997-00	SWITCH, KEY BOARD	
S204	1-553-997-00	SWITCH, KEY BOARD	
S205	1-553-997-00	SWITCH, KEY BOARD	
S206	1-553-997-00	SWITCH, KEY BOARD	
S207	1-553-997-00	SWITCH, KEY BOARD	
S208	1-553-997-00	SWITCH, KEY BOARD	
S209	1-553-997-00	SWITCH, KEY BOARD	
S210	1-553-997-00	SWITCH, KEY BOARD	
S211	1-553-997-00	SWITCH, KEY BOARD	
S212	1-553-997-00	SWITCH, KEY BOARD	
S213	1-553-997-00	SWITCH, KEY BOARD	
S214	1-553-997-00	SWITCH, KEY BOARD	
S215	1-554-375-00	SWITCH, PUSH	
**********			
♦	1-612-325-11	SV-12 BOARD	
		**********	
		SLIDE RES VAR	
RV501	1-230-414-11	RES, VAR, SLIDE 20K/20K	
**********			

Ref.No	Part No.	Description	Remark
♦	1-612-326-11	SW-31 BOARD	
		**********	
		DIODE	
D601	8-719-911-19	DIODE 1SS119	
		SWITCH	
S601	1-553-754-00	SWITCH, SLIDE	
S602	1-553-716-00	SWITCH, SLIDE	
S603	1-553-716-00	SWITCH, SLIDE	
S604	1-553-716-00	SWITCH, SLIDE	
S605	1-553-716-00	SWITCH, SLIDE	
S606	1-553-716-00	SWITCH, SLIDE	
		RESISTOR	
R601	1-247-807-00	CARBON 100 5% 1/6W	
**********			
♦	1-606-794-00	N BOARD	
		********	
		CAPACITOR	
C001	1-123-617-00	ELECT 10MF 20% 16V	
C002	1-123-617-00	ELECT 10MF 20% 16V	
C003	1-123-617-00	ELECT 10MF 20% 16V	
C004	1-161-019-00	CERAMIC 0.033MF 10% 25V	
C005	1-106-184-00	MYLAR 0.0033MF 5% 50V	
C006	1-123-821-00	ELECT 47MF 20% 16V	
		DIODE	
D001	8-719-110-32	DIODE PH302B	
		IC	
IC001	8-759-113-73	IC UPC1373H	
		COIL	
L001	1-404-310-00	COIL	
**********			
♦	1-605-071-00	LM-8 BOARD	
		**********	
		CAPACITOR	
C101	1-161-057-00	CERAMIC 0.033MF 10% 50V	
C102	1-161-057-00	CERAMIC 0.033MF 10% 50V	
		COIL	
L101	1-408-120-00	MICRO INDUCTOR 18UH	
L102	1-408-120-00	MICRO INDUCTOR 18UH	
		RESISTOR	
R101	⚠ 1-206-640-00	METAL OXIDE 100 5% 2W F	
**********			

NOTE:

The components identified by shading and mark ⚠ are critical for safety. Replace only with part number specified.

When indicating parts by reference number, please include the board name.

POWER BLOCK

Ref.No.	Part No.	Description		Remark
	⚠1-413-171-11	POWER BLOCK (SR-19E)		
		**********		
		M BOARD		
		*******		
		CAPACITOR		
C601	⚠1-110-085-00	MYLAR	0.22MF	250V
C602	⚠1-161-742-00	CERAMIC	2200PF	400V
C603	⚠1-161-742-00	CERAMIC	2200PF	400V
C604	⚠1-161-742-00	CERAMIC	2200PF	400V
C605	⚠1-161-742-00	CERAMIC	2200PF	400V
C606	⚠1-110-085-00	MYLAR	0.22MF	250V
C607	1-161-743-00	CERAMIC	4700PF	400V
C608	1-161-743-00	CERAMIC	4700PF	400V
C609	1-125-311-00	ELECT	220MF	400V
C610	1-124-023-00	ELECT	4.7MF	350V
C611	1-124-023-00	ELECT	4.7MF	350V
C612	1-124-162-00	ELECT	47MF	10V
C613	1-124-162-00	ELECT	47MF	10V
C621	1-108-413-00	MYLAR	2200PF	200V
C622	1-108-413-00	MYLAR	2200PF	200V
C623	1-161-910-00	CERAMIC	390PF	500V
C624	1-161-910-00	CERAMIC	390PF	500V
C625	1-161-915-00	CERAMIC	1000PF	500V
C626	1-130-516-00	MYLAR	0.01MF	50V
C627	1-130-520-00	MYLAR	0.022MF	50V
C628	1-124-344-00	ELECT	22MF	100V
C629	1-108-377-00	MYLAR	0.01MF	100V
C630	1-123-974-00	ELECT	2200MF	16V
C631	1-124-127-00	ELECT	100MF	25V
C632	1-130-027-00	FILM	5600PF	50V
C633	1-130-508-00	MYLAR	2200PF	50V
C634	1-130-522-00	MYLAR	0.033MF	50V
C635	1-123-318-00	ELECT	33MF	16V
C636	1-123-330-00	ELECT	22MF	25V
C637	1-123-323-00	ELECT	470MF	16V
C638	1-123-324-00	ELECT	1000MF	16V
C639	1-123-323-00	ELECT	470MF	16V
C640	1-123-332-00	ELECT	47MF	25V
C641	1-123-333-00	ELECT	100MF	25V
C642	1-123-333-00	ELECT	100MF	25V
C643	1-123-357-00	ELECT	22MF	50V
C644	1-123-357-00	ELECT	22MF	50V
		DIODE		
D601	⚠8-719-300-63	DIODE LB156		
D621	8-719-908-00	DIODE ESAC33-02CS		
D622	=>8-719-900-95	DIODE V09G		
D623	=>8-719-815-85	DIODE 1S1585		
D624	8-719-100-61	DIODE RD11E-B2		
D625	=>8-719-911-19	DIODE 1SS119		
D626	=>8-719-100-23	DIODE RD4.3E-B2		
D627	=>8-719-100-23	DIODE RD4.3E-B2		
D628	=>8-719-200-02	DIODE 10-E2		
D629	8-719-100-67	DIODE RD13E-BI		

Ref.No.	Part No.	Description	Remark
⚠D630	=>8-719-101-04	DIODE RD33E-B2	
D631	=>8-719-911-19	DIODE 1SS119	
D632	=>8-719-911-19	DIODE 1SS119	
D633	=>8-719-911-19	DIODE 1SS119	
D634	=>8-719-911-19	DIODE 1SS119	
D635	=>8-719-911-19	DIODE 1SS119	
D636	=>8-719-911-19	DIODE 1SS119	
D637	=>8-719-911-19	DIODE 1SS119	
D638	8-719-100-37	DIODE RD6.2E-BI	
D639	=>8-719-911-19	DIODE 1SS119	
D640	8-719-100-38	DIODE RD6.2E-B2	
⚠D641	=>8-719-900-95	DIODE V09G	
⚠D642	=>8-719-911-19	DIODE 1SS119	
		FUSE	
F601	⚠1-532-237-11	FUSE, Time-Lag	3.15AT 250V
		FERRITE CORE	
FB621	1-543-060-11	FERRITE CORE	
FB622	1-543-060-11	FERRITE CORE	
FB623	1-543-060-11	FERRITE CORE	
FB624	1-543-060-11	FERRITE CORE	
		IC	
IC621	8-759-937-59	IC MB3759	
		COIL	
L601	⚠1-421-481-21	LFT	
L621	1-410-054-11	CHOKE, COIL	
L622	1-421-421-21	CHOKE, COIL	
L623	1-459-215-31	CHOKE, COIL	
L624	1-408-933-11	CHOKE, COIL	
		TRANSISTOR	
⚠Q601	=>8-729-133-55	TRANSISTOR 2SC2335-L2	
⚠Q602	=>8-729-133-55	TRANSISTOR 2SC2335-L2	
Q603	8-729-102-03	TRANSISTOR 2SD1020-H	
Q604	8-729-102-03	TRANSISTOR 2SD1020-H	
Q621	8-729-306-72	TRANSISTOR 2SD667A-C	
Q622	=>8-729-245-83	TRANSISTOR 2SC2458-GR	
Q623	=>8-729-245-83	TRANSISTOR 2SC2458-GR	
Q624	=>8-729-204-82	TRANSISTOR 2SA1048-GR	
Q625	8-729-177-32	TRANSISTOR 2SD773-3	
Q626	8-729-188-23	TRANSISTOR 2SD882-P	
Q627	8-729-188-23	TRANSISTOR 2SD882-P	
Q628	=>8-729-245-83	TRANSISTOR 2SC2458-GR	

NOTE:

The components identified by shading and mark ⚠ are critical for safety. Replace only with part number specified.

When indicating parts by reference number, please include the board name.

POWER BLOCK

Ref.No.	Part No.	Description			Remark
		RESISTOR			
R601	⚠ 1-214-947-00	METAL-FILM	2.7M	1/2W	F
R602	⚠ 1-217-292-00	WIRE-WOUND	3.3	5W	F
R603	1-246-528-00	CARBON	200K	1/4W	
R604	1-246-528-00	CARBON	200K	1/4W	
R605	1-246-528-00	CARBON	200K	1/4W	
R606	1-246-528-00	CARBON	200K	1/4W	
R607	⚠ 1-212-946-00	FUSE	3.3	1/2W	F
R608	⚠ 1-212-946-00	FUSE	3.3	1/2W	F
R609	1-246-449-00	CARBON	100	1/4W	
R610	1-246-449-00	CARBON	100	1/4W	
R621	⚠ 1-206-475-00	METAL-OXIDE	33	2W	F
R622	1-535-363-00	SHUNT	0.02	2W	
R623	1-246-485-00	CARBON	3.3K	1/4W	
R624	1-246-473-00	CARBON	1.0K	1/4W	
R626	⚠ 1-213-151-00	METAL-OXIDE	4.7K	1W	F
R627	1-246-503-00	CARBON	18K	1/4W	
R628	1-246-509-00	CARBON	33K	1/4W	
R629	1-246-417-00	CARBON	4.7	1/4W	
R630	1-246-453-00	CARBON	150	1/4W	
R631	1-246-485-00	CARBON	3.3K	1/4W	
R632	1-246-473-00	CARBON	1.0K	1/4W	
R633	1-246-481-00	CARBON	2.2K	1/4W	
R634	1-246-491-00	CARBON	5.6K	1/4W	
R635	1-246-483-00	CARBON	2.7K	1/4W	
R636	1-246-478-00	CARBON	1.6K	1/4W	
R637	1-246-503-00	CARBON	18K	1/4W	
R638	1-246-509-00	CARBON	33K	1/4W	
R639	1-246-467-00	CARBON	560	1/4W	
R640	1-246-501-00	CARBON	15K	1/4W	
R641	1-246-489-00	CARBON	4.7K	1/4W	
R642	1-246-489-00	CARBON	4.7K	1/4W	
R643	1-246-483-00	CARBON	2.7K	1/4W	
R644	1-246-485-00	CARBON	3.3K	1/4W	
R645	1-246-476-00	CARBON	1.3K	1/4W	
R646	1-246-497-00	CARBON	10K	1/4W	
R647	1-246-489-00	CARBON	4.7K	1/4W	
R648	⚠ 1-206-475-00	METAL-OXILE	33	2W	F
R649	1-246-471-00	CARBON	820	1/4W	
R650	⚠ 1-205-697-00	CEMENT	15	5W	F
R651	1-246-471-00	CARBON	820	1/4W	
R652	⚠ 1-247-983-00	CARBON	1.8	1/2W	F
R653	⚠ 1-247-960-00	CARBON	270	1/2W	F
R654	1-246-475-00	CARBON	1.2K	1/4W	
R655	1-246-483-00	CARBON	2.7K	1/4W	
		VARIABLE RESISTER			
RV621	1-228-989-11	RES, ADJ, METAL	470		
RV622	1-228-991-11	RES, ADJ, METAL	2.2K		
		RELAY			
RY621	1-515-462-21	RELAY			

Ref.No.	Part No.	Description			Remark
		TRANSFORMER			
T601	⚠ 1-447-677-11	TRANSFORMER, CONVERTOR			
T602	⚠ 1-437-102-12	TRANSFORMER, DRIVE			
		D BOARD *******			
		CAPACITOR			
C1	1-136-024-00	FILM	3600PF	50V	
C2	1-102-112-00	CERAMIC	330PF	50V	
C3	1-124-127-00	ECECT	100MF	25V	
C4	1-130-528-00	MYLAR	0.1MF	50V	
C5	1-124-511-00	ELECT	22MF	50V	
C6	1-124-511-00	ELECT	22MF	50V	
C7	1-123-875-00	ELECT	10MF	50V	
		DIODE			
D1	=>8-719-815-85	DIODE 1S1585			
D2	=>8-719-815-85	DIODE 1S1585			
D3	=>8-719-815-85	DIODE 1S1585			
		IC			
IC1	8-759-937-59	IC MB3759			
		COIL			
L1	1-421-550-11	COIL			
L2	1-408-421-31	COIL			
L3	1-408-421-31	COIL			
L4	1-408-421-31	COIL			
L5	1-408-427-31	COIL			
		RESISTOR			
R1	1-246-483-00	CARBON	2.7K	1/4W	
R2	1-246-501-00	CARBON	15K	1/4W	
R3	1-246-433-00	CARBON	22	1/4W	
R4	1-246-511-00	CARBON	39K	1/4W	
R5	1-246-529-00	CARBON	220K	1/4W	
		TRANSFORMER			
T1	1-447-765-11	TRANSFORMER			

NOTE:

The components identified by shading and mark ⚠ are critical for safety. Replace only with part number specified.

When indicating parts by reference number, please include the board name.

Ref.No	Part No.	Description	Remark
		MISCELLANEOUS	
		**********	
	⚠1-413-171-11	SWITCHING REGULATOR (SR-19E)	
	⚠1-464-270-12	BOOSTER, RF MODULATOR(RFU-808)	
	1-520-470-11	METER UNIT, LEVEL	
	⚠1-534-817-31	CORD POWER	
	♦:1-556-934-00	CABLE, PIN	
	8-825-508-10	HEAD, FE	
L901	1-464-286-00	SENSOR, S COIL	
L902	1-464-250-00	SENSOR, T COIL	
M902	8-838-048-01	MOTOR, DC (BHF-1908A)	
M904	X-3679-268-1	MOTOR ASSY, L	
PM901	⚠1-454-348-31	SOLENOID, BRAKE PLUNGER	
PM902	⚠1-454-365-21	SOLENOID, PLUNGER (PINCH)	
S601	⚠1-552-903-12	SWITCH, PUSH POWER	
S901	1-554-374-00	SWITCH, LEVER (REC PROOF)	
S902	1-554-374-00	SWITCH, LEVER (CASSETTE DOWN)	
S903	1-553-539-00	SWITCH, MICRO (LOADING END)	
S904	1-553-718-00	SWITCH, MICRO (UNLOADING END)	

****

ACCESSORIES AND PACKING MATERIALS
****

Part No.	Description	Remark
A-6765-427-A	COMMANDER ASSY	
1-551-513-00	CABLE, COAXAL ASSY	
1-556-893-00	CORD ASSY, COAXIAL	
3-656-301-00	SCREWDRIVER, CONTROL	
3-677-503-00	SHEET, PROTECTION	
3-681-091-01	INDIVIDVAL CARTON	
3-681-287-01	LID, ACCESSORY CASE	
3-683-463-01	CASE, ACCESSORY	
3-684-089-01	CUSHION (UPPER)	
3-684-090-01	CUSHION (LOWER)	
3-701-630-00	BAG, POLYETHYLENE	
3-773-799-41	MANUAL, INSTRUCTION	
3-773-799-71	MANUAL, INSTRUCTION	
7-632-658-01	FILM	

NOTE:

The components identified by shading and mark ⚠ are critical for safety. Replace only with part number specified.

When indicating parts by reference number, please include the board name.

RMT-216

SERVICE MANUAL

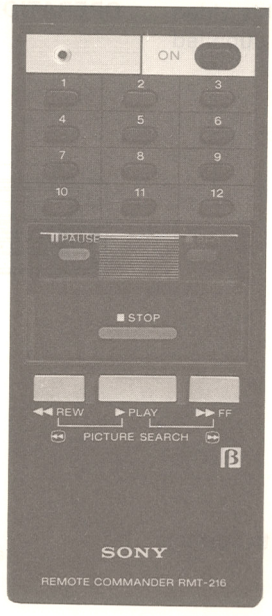

SPECIFICATIONS

Remote control system	Infrared control
Power requirements	3V dc, 2 IEC designation R6 batteries (size AA)
Dimensions	Approx. 65 × 20 × 153 mm (w/h/d) ($2^5/_8 \times {}^{13}/_{16} \times 6^1/_8$ inches) incl. projecting parts and controls
Weight	Approx. 140 g (5 oz) incl. batteries

DISASSEMBLY

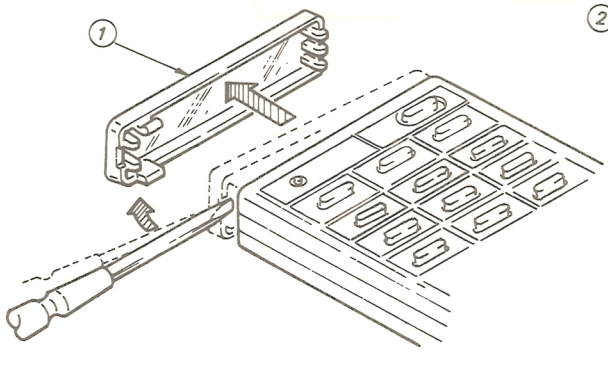

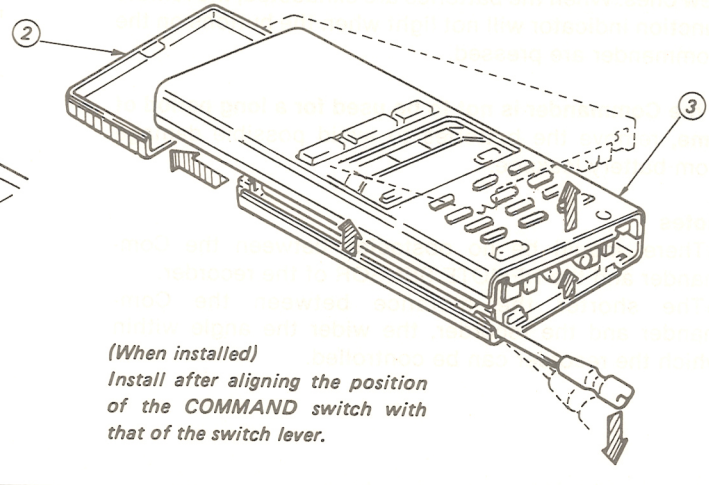

(When installed)
Install after aligning the position of the COMMAND switch with that of the switch lever.

REMOTE COMMANDER

SONY®

1. REMOTE CONTROL OPERATION

You can control almost all the functions of this video cassette recorder from your armchair using the supplied Remote Commander.

BATTERY INSERTION

1 Open the lid.

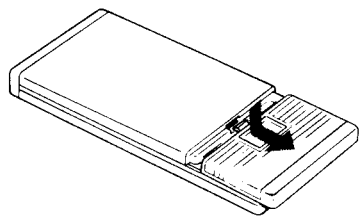

2 Insert two IEC designation R6 batterries with correct polarity.

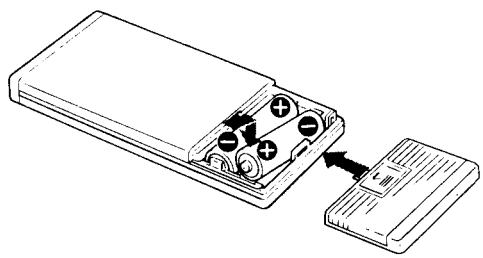

3 Close the lid firmly.

Battery life
In normal operation, batteries will last for about six months. If the range of the Remote Commander becomes noticeably short, replace the batteries with new ones. When the batteries are exhausted, the remote function indicator will not light when the buttons on the Commander are pressed.

If the Commander is not to be used for a long period of time, remove the batteries to avoid possible damage from battery leakage.

Notes
- There should be no obstacles between the Commander and the REMOTE SENSOR of the recorder.
- The shorter the distance between the Commander and the recorder, the wider the angle within which the recorder can be controlled.

OPERATION

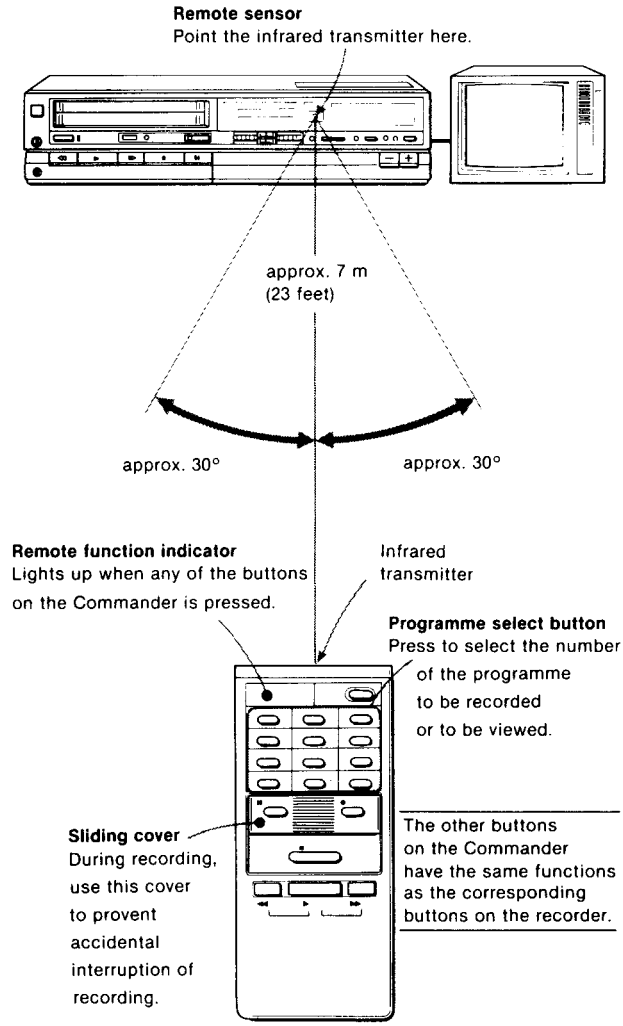

2. SCHEMATIC DIAGRAM

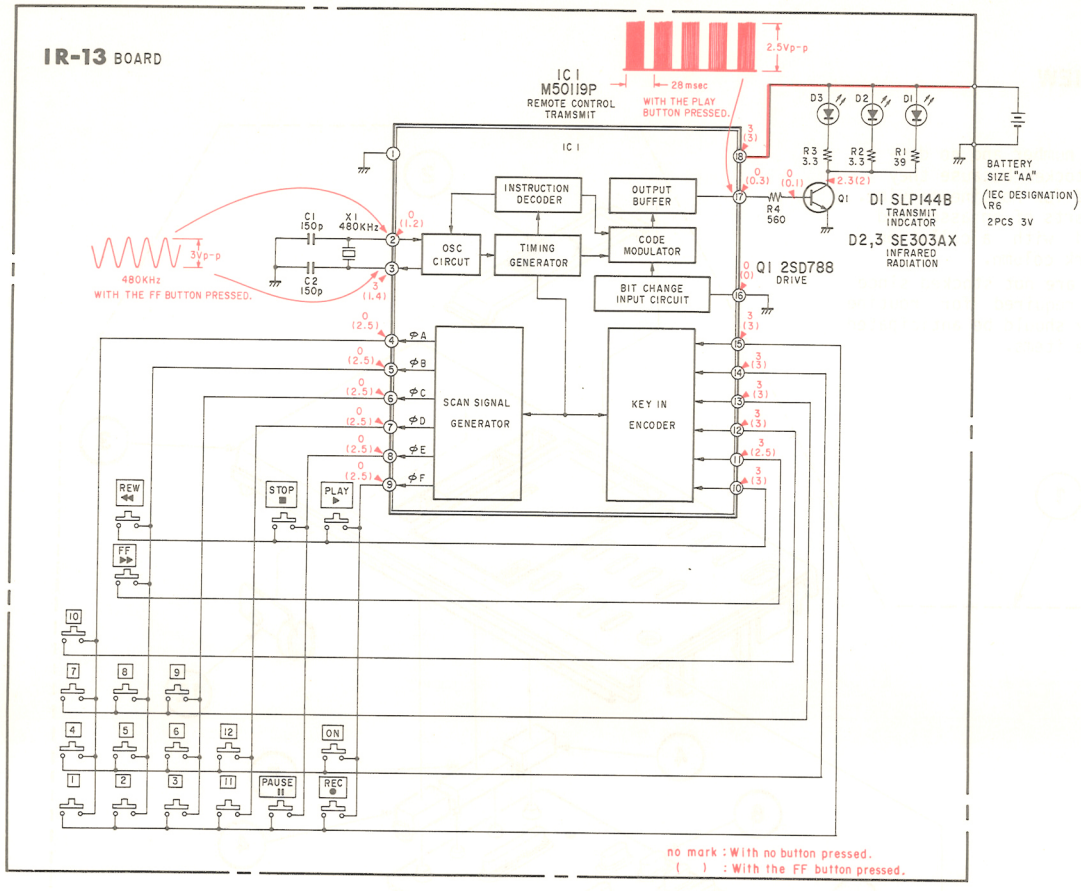

M50119P

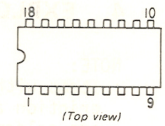

2SD788

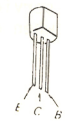

SE303AX

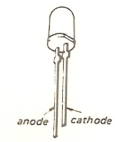

SLP144B

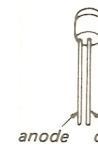

- All resistors are in ohms, 1/6W unless otherwise noted.
- All capacitors are in μF (p:pF) unless otherwise noted. 50V or less are not indicated except for electrolytic capacitors.
- ——— : B + bus.
- The voltage value is measured using a digital tester (10MΩ).

When indicating parts by reference number, please include the board name.

- ○— indicates a lead wire mounted on the component side.
- —● indicates a lead wire mounted on the printed side.
- Conductor side (inner)
- Conductor side
- B + pattern

3. PRINTED WIRING BOARD

— Conductor Side —

IR-13 BOARD

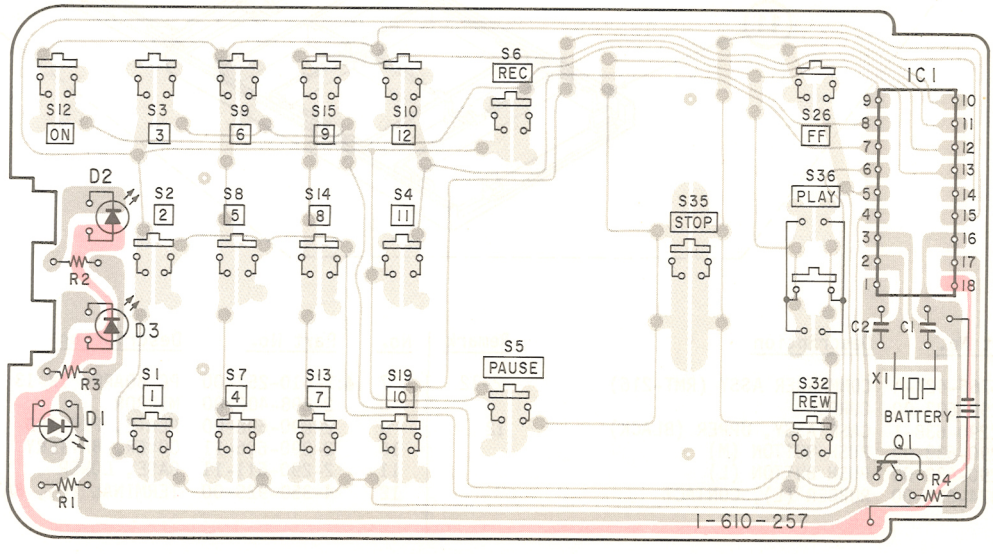

4. EXPLODED VIEW

NOTE:
- Items with no part number and no description are not stocked because they are seldom required for routine service.
- The construction parts of an assembled part are indicated with a collation number in the remark column.
- Items marked " ♦ " are not stocked since they are seldom required for routine service. Some delay should be anticipated when ordering these items.

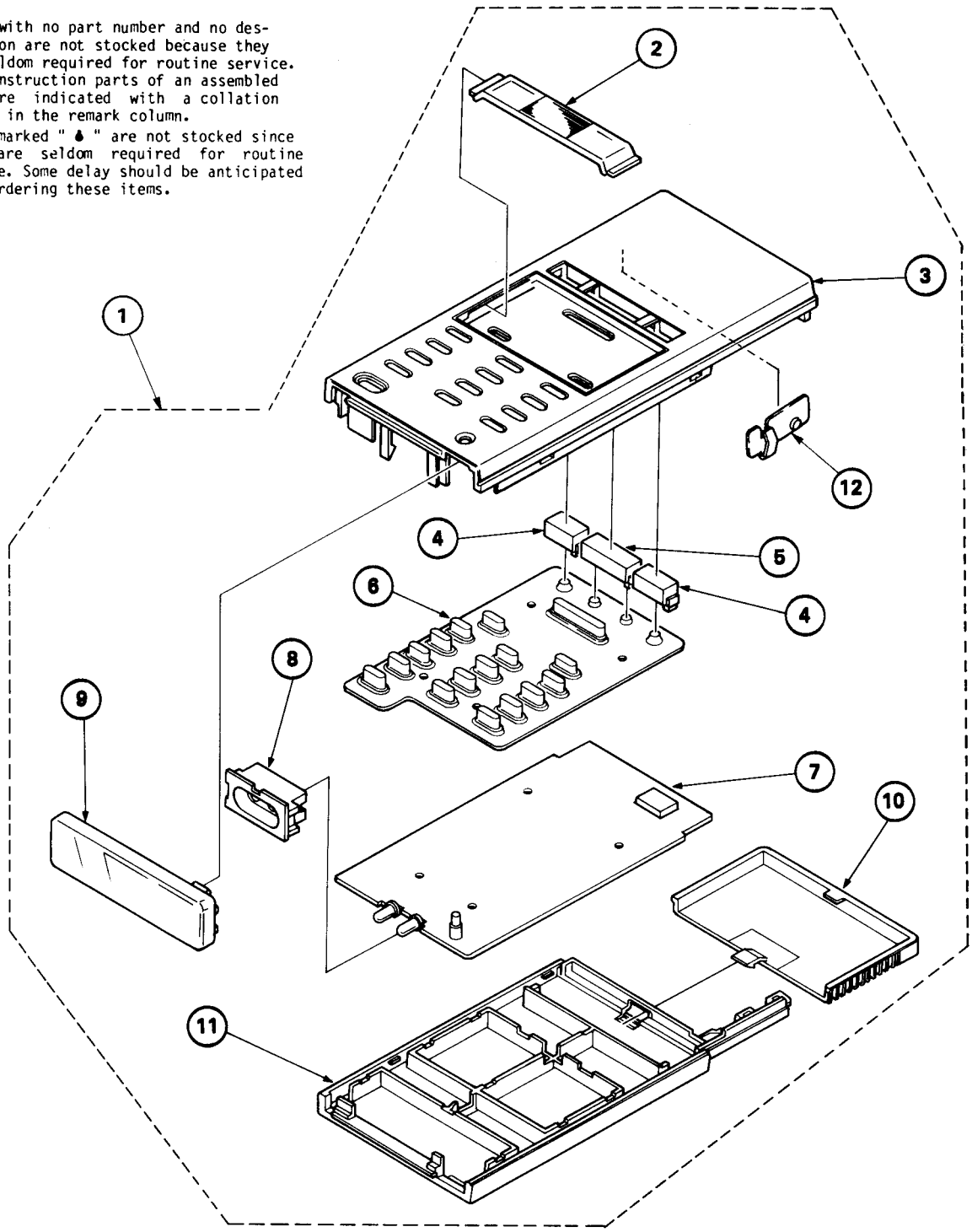

No.	Part No.	Description	Remark
1	A-6765-427-A	COMMANDER ASSY (RMT-216)	2-12
2	2-290-603-00	CURSOR	
3	X-2290-638-1	CASE ASSY, UPPER (BLACK)	12
4	2-290-633-00	PUSH BUTTON (M)	
5	2-290-632-00	PUSH BUTTON (L)	
6	2-374-636-00	RUBBER (L), CONTACT	
7	♦:1-610-257-00	PC BOARD, IR-13	
8	2-298-402-00	MIRROR	
9	2-290-608-00	PLATE, FROSTED	
10	2-290-606-11	COVER, BATTERY	
11	2-290-611-11	CASE, LOWER	
12	4-350-925-00	TERMINAL (C), BATTERY	

5. ELECTRICAL PARTS LIST

NOTE:

The components identified by shading and mark ⚠ are critical for safety. Replace only with part number specified.

- =>: Due to standardization, interchangeable replacements may be substituted for parts specified in the diagrams.
- Items marked " ♦ " are not stocked since they are seldom required for routine service. Some delay should be anticipated when ordering these items.

- All variable and adjustable resistors have characteristic curve B, unless otherwise noted.

CAPACITORS
- MF : μF, PF : μμF

RESISTORS
- All resistors are in ohms
- F : nonflammable

COILS
- MMH : mH, UH : μH

Ref.No	Part No.	Description			Remark
	♦:1-610-257-00	IR-13 BOARD **********			
	2-290-601-00	TERMINAL (A), BATTERY			
	2-290-602-00	TERMINAL (B), BATTERY			
		CAPACITOR			
C1	1-102-108-00	CERAMIC 150PF	10%	50V	
C2	1-102-108-00	CERAMIC 150PF	10%	50V	
		DIODE			
D1	8-719-901-44	DIODE SLP144B			
D2	8-719-193-03	DIODE SE303AX			
D3	8-719-193-03	DIODE SE303AX			
		IC			
IC1	8-759-600-07	IC M50119P			
		TRANSISTOR			
Q1	8-729-378-84	TRANSISTOR 2SD788-4			
		RESISTOR			
R1	1-247-797-00	CARBON 39	5%	1/6W	
R2	1-247-771-00	CARBON 3.3	5%	1/6W	
R3	1-247-771-00	CARBON 3.3	5%	1/6W	
R4	1-247-825-00	CARBON 560	5%	1/6W	
		CRYSTAL			
X1	1-527-476-00	OSCILLATOR, CERAMIC			

When indicating parts by reference number, please include the board name.

SL-HF100EC
RMT-219

SONY®
SERVICE MANUAL

EC Model
July, 1984

SUPPLEMENT-1

Subject: Silver Cabinet Model is now available

- This supplement contains only the points which differ from SL-HF100EC (Black).
- File this supplement with the service manual.

MICROFILM

Consumer VIDEO

EXPLODED VIEWS

NOTE:
- Items with no part number and no description are not stocked because they are seldom required for routine service.
- The construction parts of an assembled part are indicated with a collation number in the remark column.
- Items marked " ♦ " are not stocked since they are seldom required for routine service. Some delay should be anticipated when ordering these items.
- The mechanical parts with no reference number in the exploded views are not supplied.

The components identified by shading and mark ⚠ are critical for safety. Replace only with part number specified.

FRONT PANEL AND CABINET ASSEMBLY

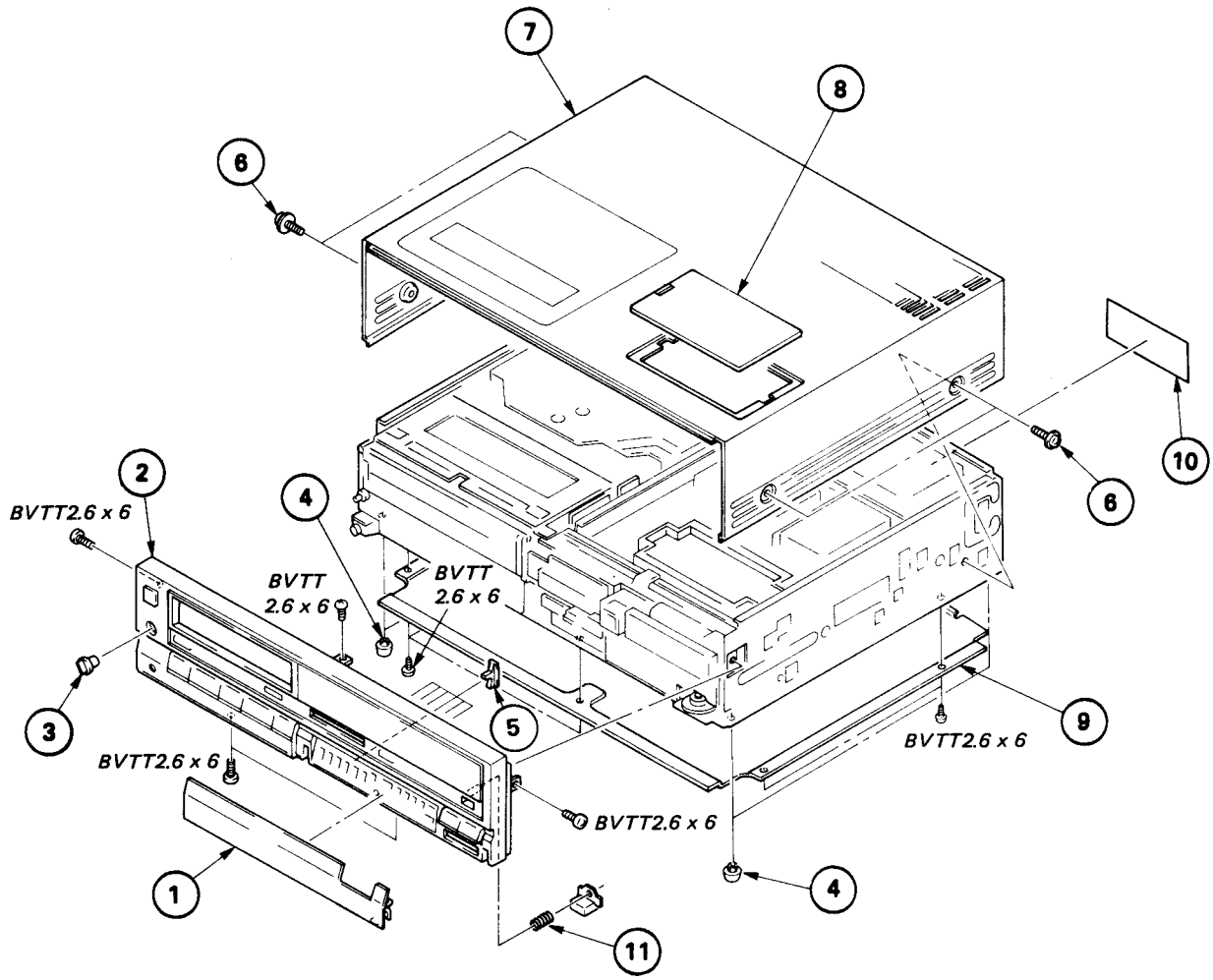

No.	Part No.	Description	Remark
1	X-3684-027-1	DOOR ASSY, FRONT	
2	X-3684-028-1	PANEL ASSY, FRONT	5,11
3	3-684-013-11	KNOB, CONTROL	
4	3-670-155-11	LEG	
5	3-684-035-01	BUTTON, SLIDE	
6	3-703-354-11	SCREW (OS), CASE, CLAW	
7	X-3684-023-1	CASE ASSY, UPPER	
8	3-681-218-00	DOOR, PRESET	
9	♦:3-684-056-01	PLATE, BOTTOM	
10	♦:3-684-069-01	LABEL, MODEL NUMBER	
11	4-864-435-00	SPRING, COMPRESSION	

ACCESSORIE AND PACKING MATERIAL
****

Part No.	Description	Remark
3-684-096-11	INDIVIDUAL CARTON	

RMT-219

EXPLODED VIEW

NOTE:
- Items with no part number and no description are not stocked because they are seldom required for routine service.
- The construction parts of an assembled part are indicated with a collation number in the remark column.
- Items marked " ♦ " are not stocked since they are seldom required for routine service. Some delay should be anticipated when ordering these items.

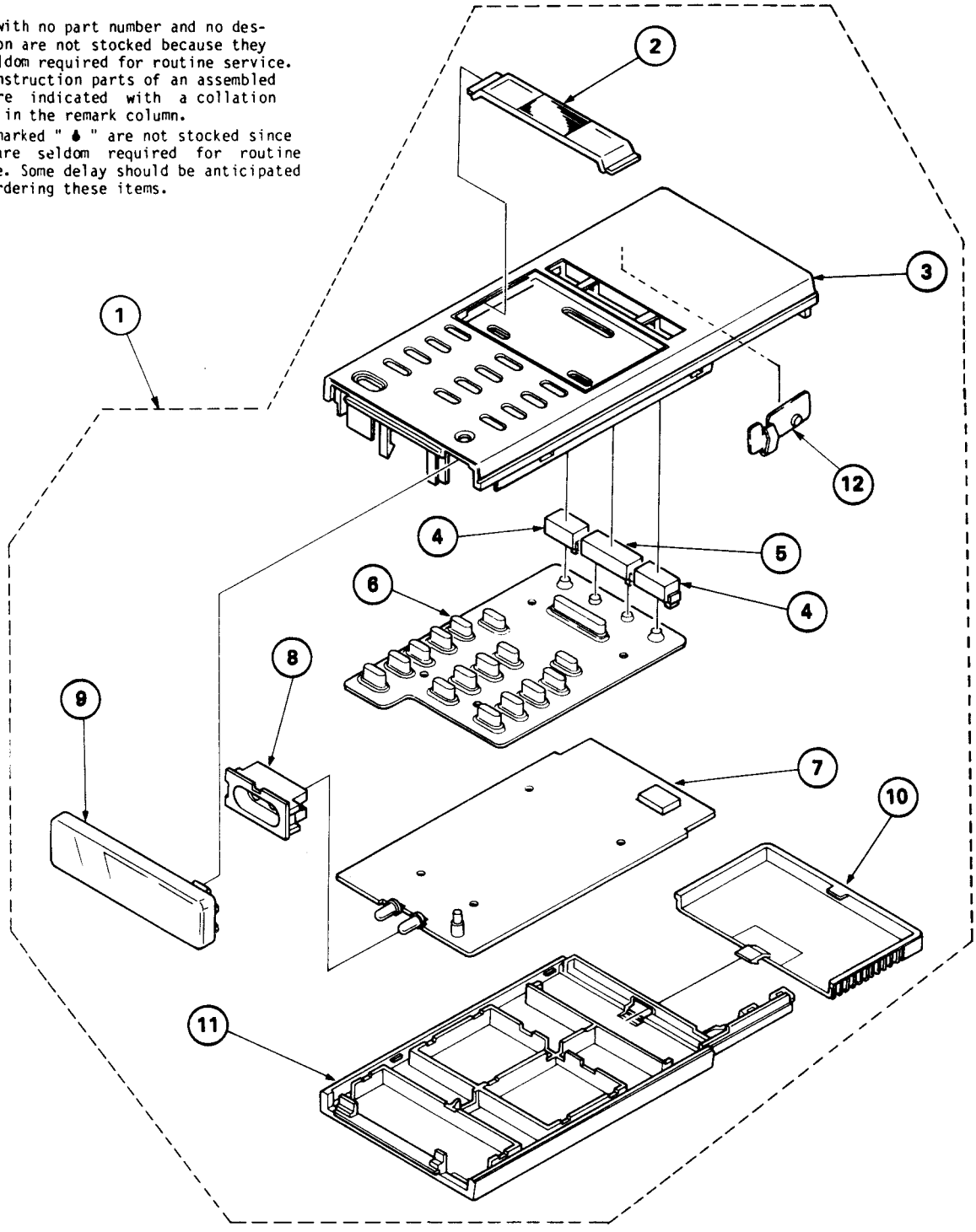

No.	Part No.	Description	Remark
1	A-6765-274-A	COMMANDER ASSY (RMT-219)(SILVER)	2-12
2	2-290-603-00	CURSOR	
3	X-2290-621-0	CASING ASSY (SILVER)	12
4	2-290-633-31	PUSH BUTTON (M)	
5	2-290-632-31	PUSH BUTTON (L)	
6	2-374-636-00	RUBBER (L), CONTACT	
7	♦:1-610-257-00	IR-13 BOARD	
8	2-298-402-00	MIRROR	
9	2-290-608-00	PLATE, FROSTED	
10	2-290-606-00	COVER, BATTERY	
11	2-290-611-00	CASE, LOWER	
12	4-350-925-00	TERMINAL (C), BATTERY	

SONY®
SERVICE MANUAL

November, 1984

J28

SUPPLEMENT-2

Subject:
This supplement updates the service manual to include the revised schematic diagrams, printed wiring boards and electrical parts list for the video, servo system control, audio and tuner timer section as follows.
File this supplement with the service manual.

Correction:
There are some incorrect portions on the service manual.
Please correct the overall block diagram, AFM level diagram.
There are mistakes in the method of adjustment (Supplement-1).
Please correct.

[Details of the Change]

1. **Video Section**
   - **RP-17 Board**
     - The pattern has been changed.
     - The end of part No. has been also changed from -11 to -12.
   - **YC-28 Board**
     - The parts mounted on the conductor side have been mounted on the component side.
     - Q15 has been changed to a digital transistor (transistor with resistors).
     - The end of part No. has been also changed from -11 to -12.

2. **Servo System Control Section**
   - **SS-28 Board**
     - Q017, Q023, Q307, Q308, Q310, Q317 have been changed to digital transistor (transistor with resistor).

3. **Audio Section**
   - **AF-3 Board**
     - The end of part No. has been changed to -13.
       DM-10 board has been mounted on AF-3 board.
       Q018 has been deleted. (See page 25.)
     - The end of part No. has been changed to -14 or -15. (See page 33.)
       Q013, Q016, Q711, Q712, Q713, Q714 and Q715 have been deleted.
       Q715, Q728, Q729, IC021 and IC022 have been added.
       IC020 has been changed from MB88201-152G to MB88201-167G.
   - **AM-5 Board**
     - D508 has been changed from TLR123 to RD3.3E-B1.

4. **Tuner Timer Section**
   - **TU-60 Board**
     - D402, Q301, Q302, Q303, Q401, Q402 and Q403 have been deleted.
     - IC101 has been changed from M50160-018SP to M50160-019SP.
     - IC003 has been changed from TDA3800AS to TDA3800GS.
     - Q404 has been added.
   - **TM-54 Board**
     - IC101 has been changed from μPD7519G-053 to μPD7519G-132.

In addition to the above items, the valves of resistors and capacitors have been changed.

— Continued on next page —

MICROFILM

The part No. of the circuit board is indicated on the board as shown below.

RP-17 Board

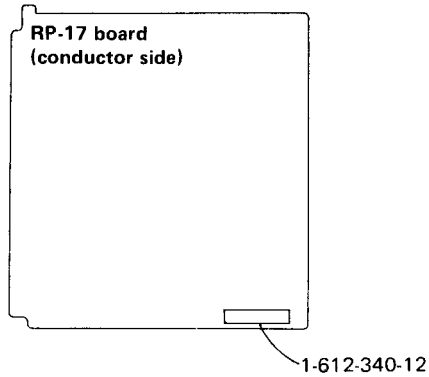

YC-28 Board

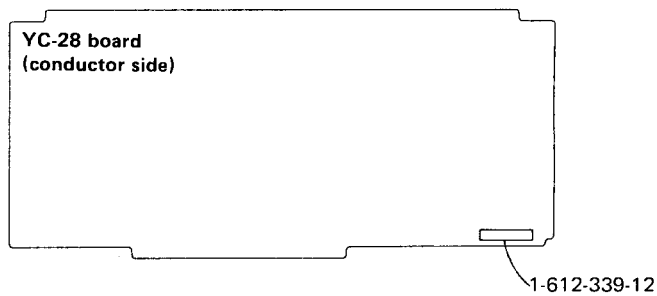

AF-3 Board

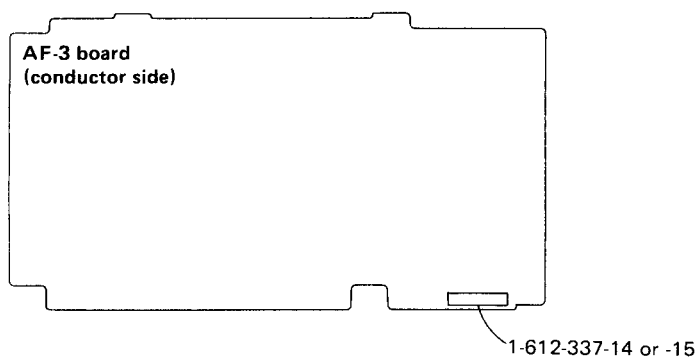

CORRECTION

OVERALL BLOCK DIAGRAM

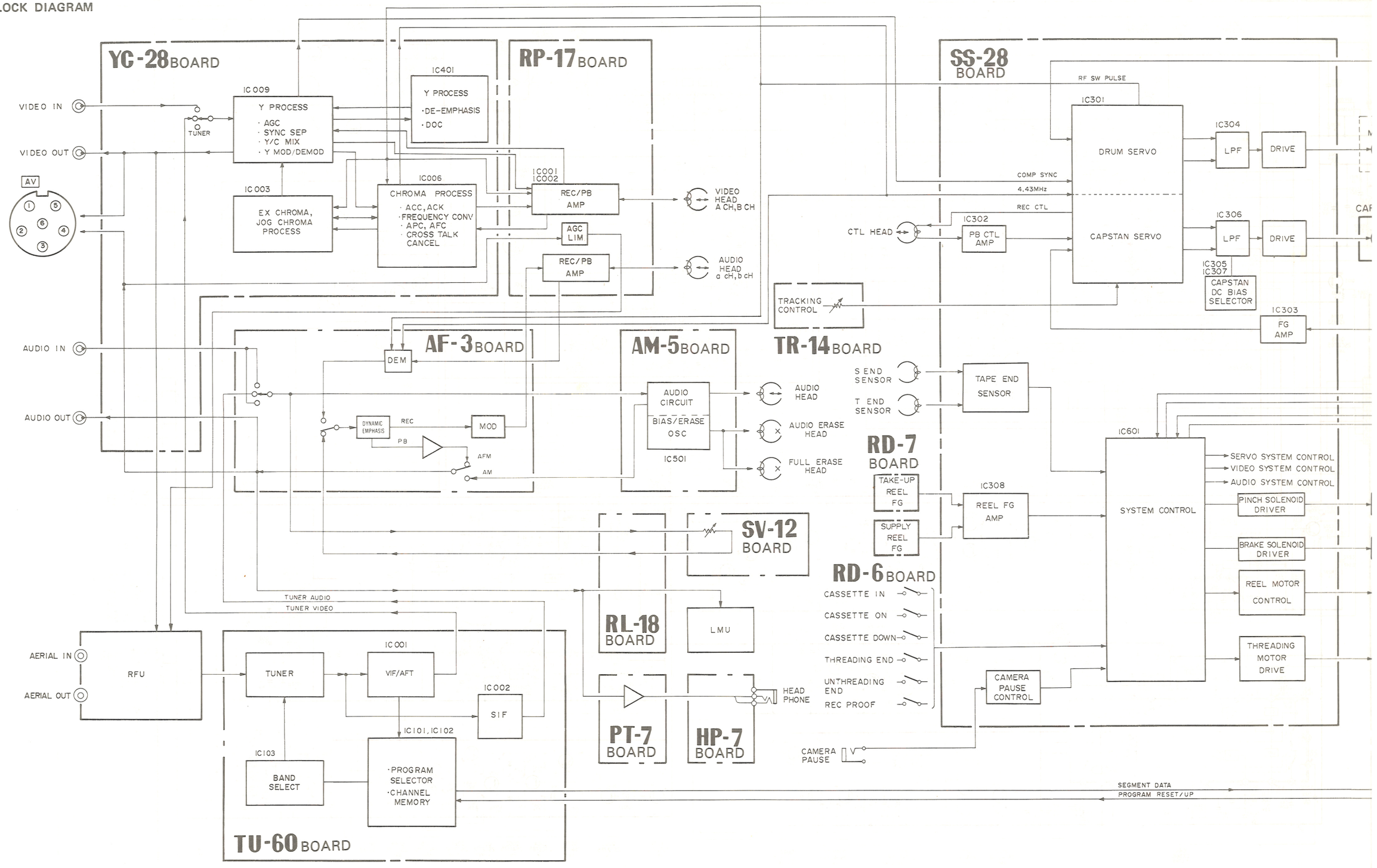

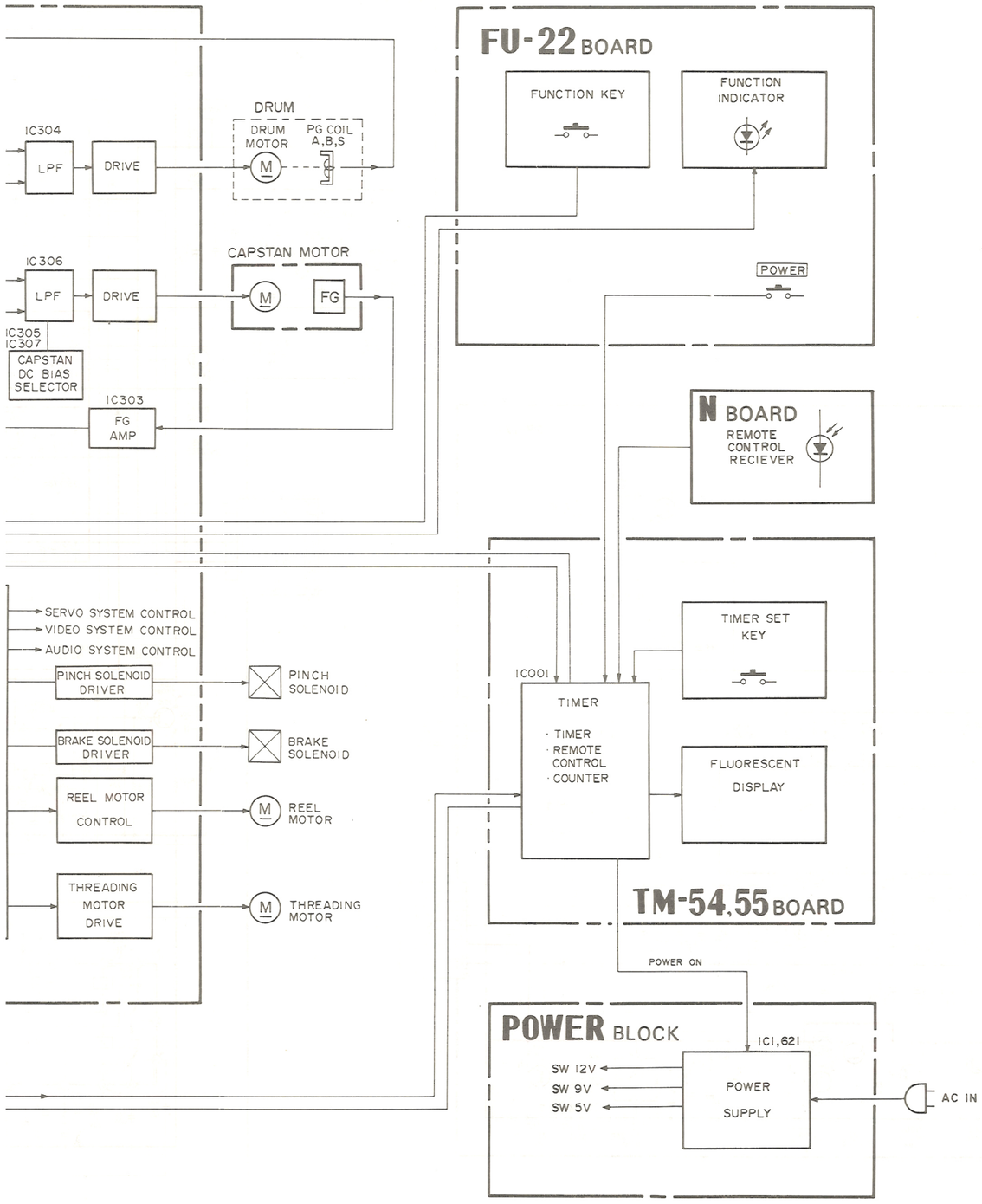

CORRECTION

AFM LEVEL DIAGRAM (REC)

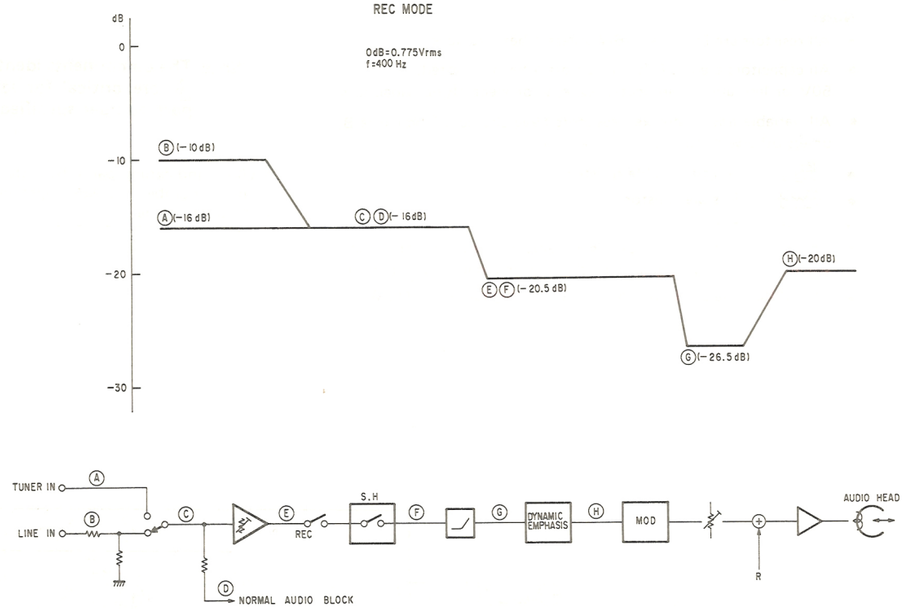

AFM LEVEL DIAGRAM (PB)

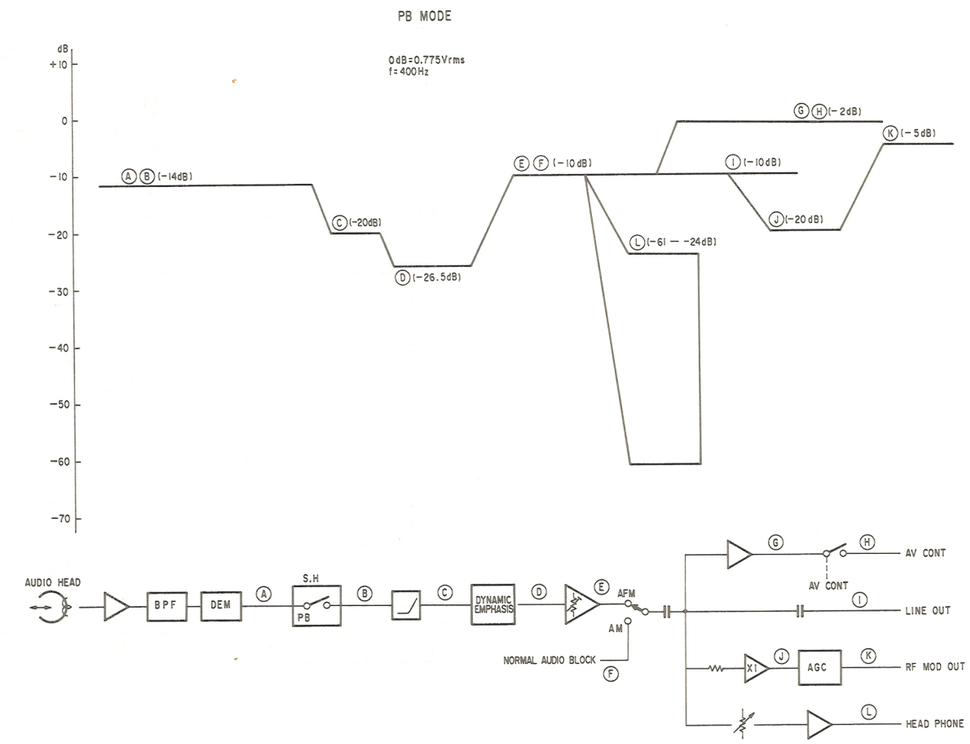

SCHEMATIC DIAGRAM AND PRINTED WIRING BOARDS

RP-17 (LOW-CONVERTED CHROMA, Y-FM & AFM SIGNALS, RECORD/PLAYBACK AMP), YC-28 (Y & CHROMA SIGNALS RECORD/PLAYBACK PROCESS) SCHEMATIC DIAGRAM

– Ref. No. RP-17 BOARD : 2000 series, YC-28 BOARD : 1000 series –

Note:

- All resistors are in ohms, 1/6W unless otherwise noted.
- All capacitors are in μF (p:pF) unless otherwise noted. 50V or less are not indicated except for electrolytic capacitors.
- All variable and semi-fixed resistors have characteristic curve B, unless otherwise noted.
- : Nonflammable resistor
- : Fusible resistor
- : B + bus.
- The voltage value is a reference value between the grounding when the color bar signal is received from a color bar generator.
- The voltage value is measured using a digital tester (10MΩ).

Note: The components identified by shading and mark ⚠ are critical for safety. Replace only with part number specified.

When indicating parts by reference number, please include the board name.

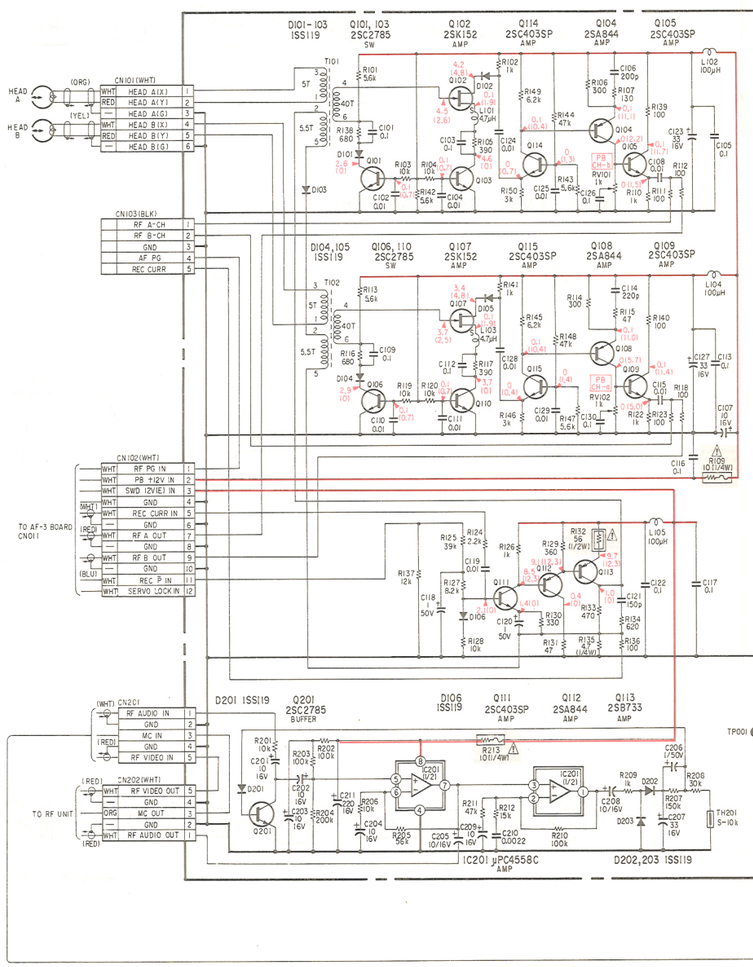

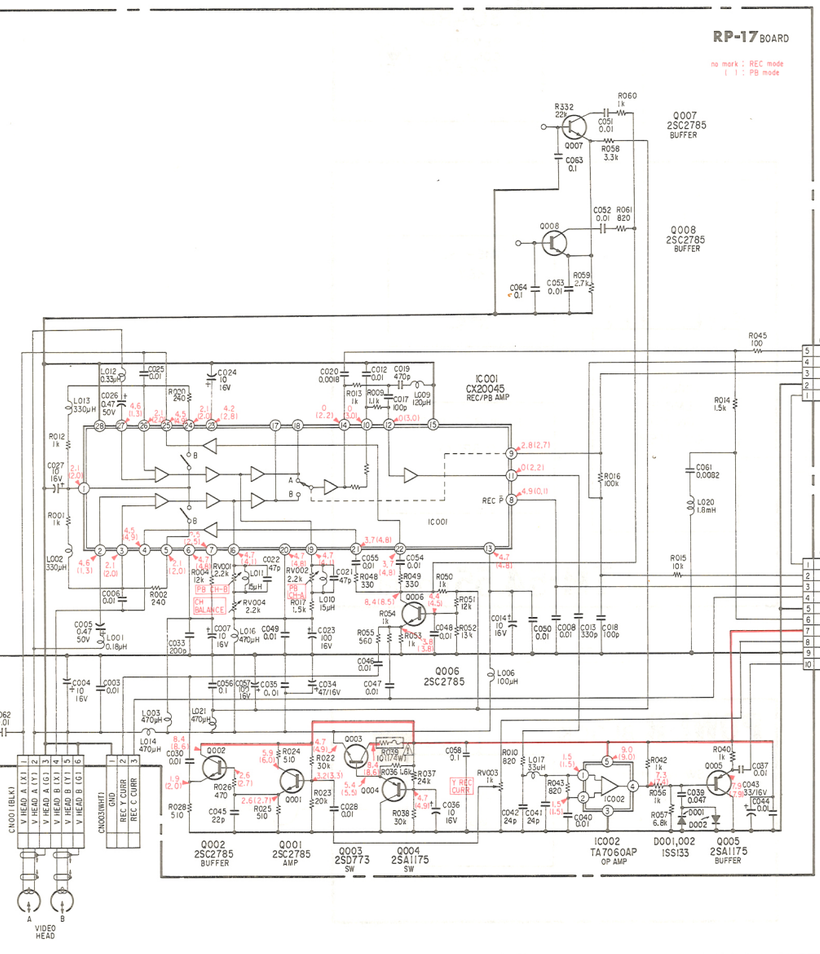

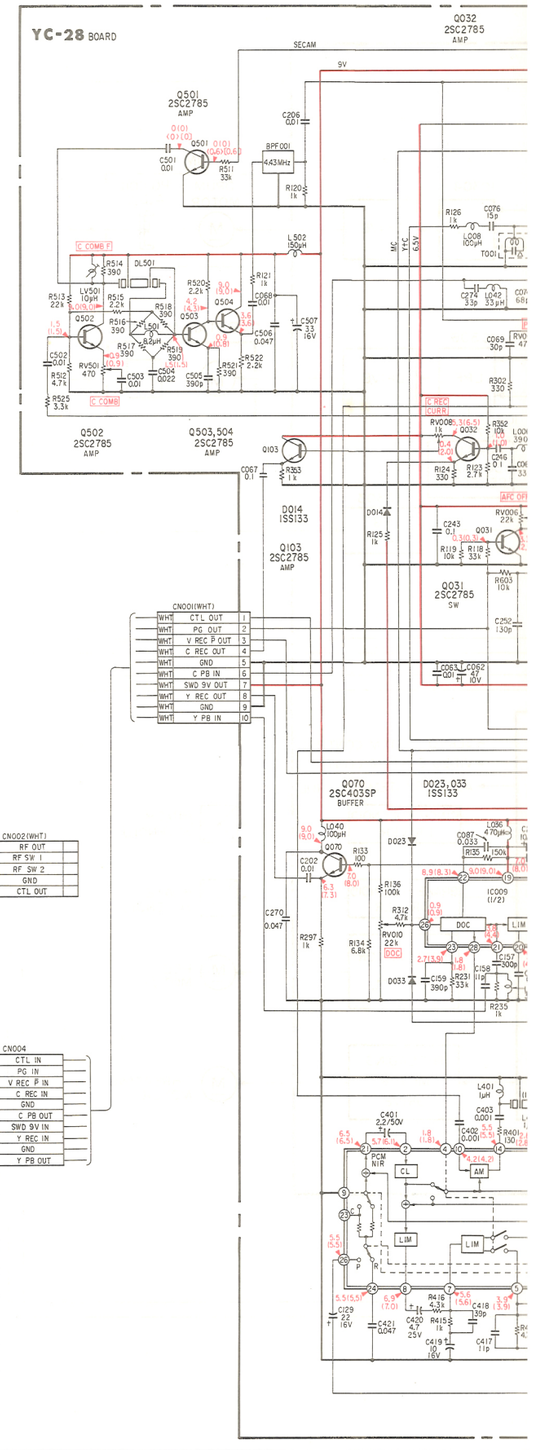

15 16 17 18 19 20 21 22 23 24 25 26 27 28 29 30 31

A B C D E F G H I J

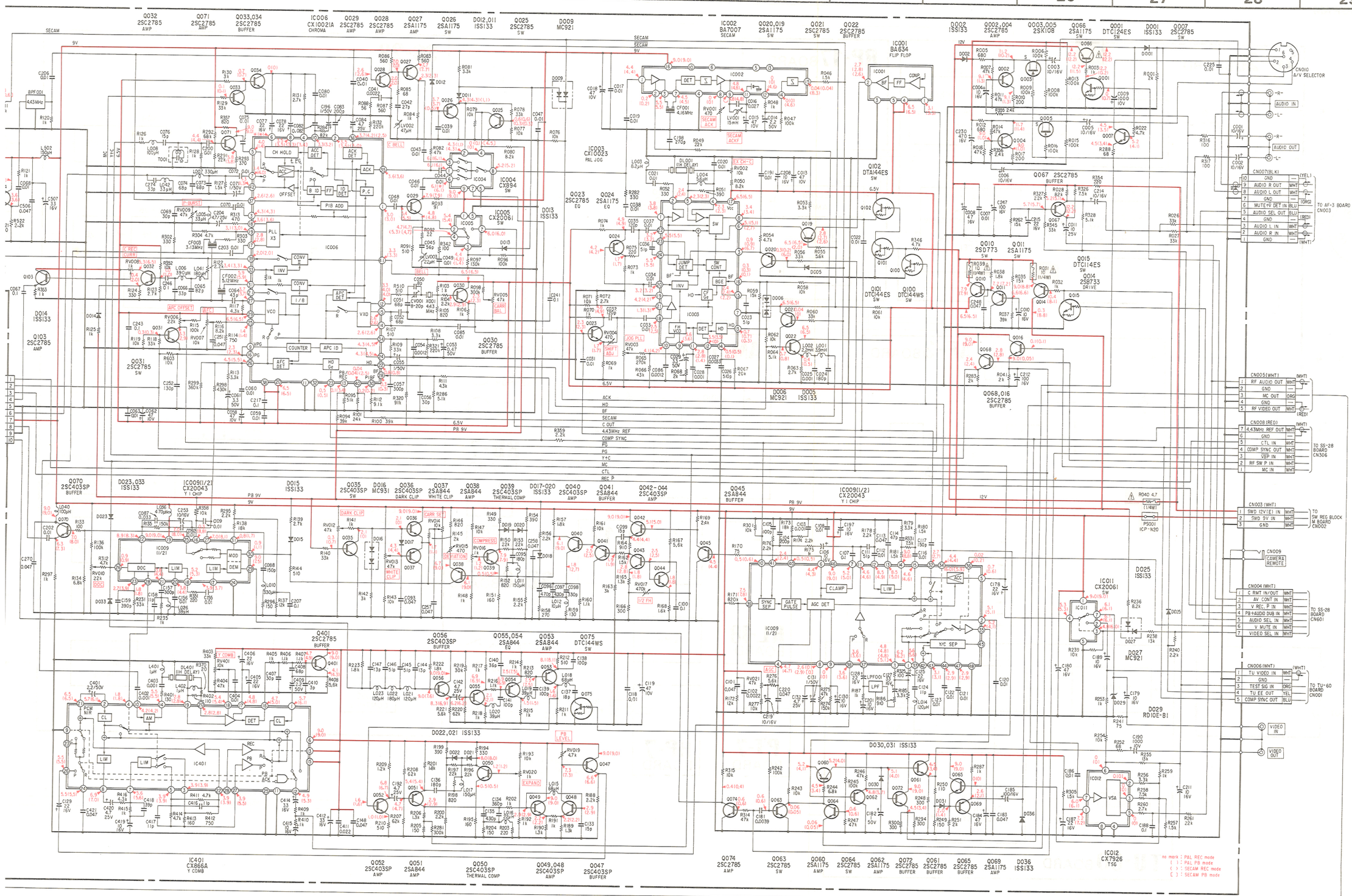

RP-17 (LOW-CONVERTED CHROMA, Y-FM & AFM SIGNALS, RECORD/PLAYBACK AMP), YC-28 (Y & CHROMA SIGNALS RECORD/PLAYBACK PROCESS) PRINTED WIRING BOARDS

– Ref. No. RP-17 BOARD : 2000 series, YC-28 BOARD : 1000 series –

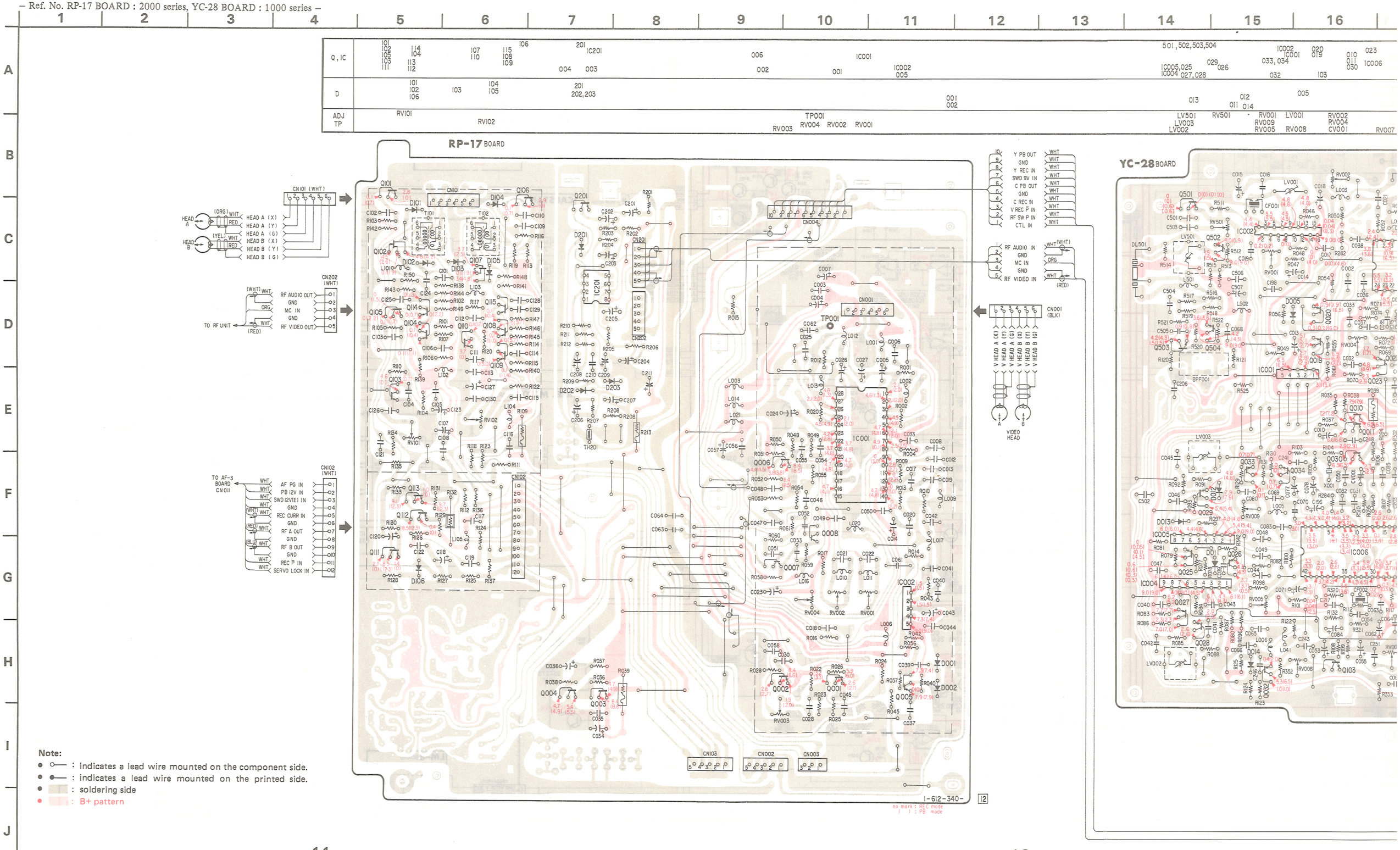

Note:

- ○— : indicates a lead wire mounted on the component side.
- ●— : indicates a lead wire mounted on the printed side.
- : soldering side
- : B+ pattern

IC005,025 IC004 027,028 029 026 IC002 033,034 IC001 020 019 032 010 011 030 IC006 023 103 IC003 024 022 071 021 031 102 068 070 014,015 100 IC401 101 401 IC009 016 047,048,049,050,075 044,043 045 042 051 041 074 035,036,037,038 052 054 055 040 039 053 056 064 069 063,062 060,061 001 072 065 IC011 IC012 004 005 066 007 067 002 003	Q, IC
013 012 011 014 005 006 009 025 015 021 022 017 016 033,023 018 019 020 036 031 030 002 027 029 001	D
LV501 LV003 LV002 RV501 RV001 RV009 RV005 LV001 RV008 RV002 RV004 CV001 RV007 RV006 RV003 RV401 RV021 RV020 RV019 RV014 RV010 RV017 RV015 RV016 RV012 RV013	ADJ TP

Y PB OUT WHT
GND WHT
Y REC IN WHT
SWD 9V IN WHT
C PB OUT WHT
GND WHT
C REC IN WHT
V REC P IN WHT
RF SW P IN WHT
CTL IN WHT

RF AUDIO IN WHT (WHT)
GND
MC IN ORG
GND
RF VIDEO IN WHT (RED)

CN001 (BLK)
V HEAD A (Y)
V HEAD A (G)
V HEAD B (X)
V HEAD B (Y)
V HEAD B (G)
VIDEO HEAD

YC-28 BOARD

VIDEO OUT
VIDEO IN
AUDIO OUT -R- -L-
AUDIO IN -R- -L-
CN009 CAMERA REMOTE
CN010 A/V SELECTOR

CN001 (WHT): Y PB IN, GND, Y REC OUT, SWD 9V OUT, C PB IN, GND, C REC OUT, V REC P OUT, RF SW P OUT, CTL OUT
CN003 (WHT): GND, SWD 9V IN, SWD 12VEI IN — TO SW REG BLOCK (M BOARD) CN002
CN008 (RED): 4.43MHz REF OUT, GND, CTL IN, COMP SYNC OUT, V PB IN, RF SW P IN, MC IN — TO SS-28 BOARD CN306
CN004 (WHT): VIDEO SEL IN, V MUTE IN, AUDIO SEL IN, PB+AUDIO DUB IN, V REC P IN, AV CONT IN, C RMT IN/OUT — TO SS-28 BOARD CN601
CN005 (BLK): RF VIDEO OUT, GND, MC OUT, GND, RF AUDIO OUT (RED) (ORG) (WHT)
CN006 (WHT): COMP SYNC OUT, TU EE OUT, TEST SIG IN, GND, TU VIDEO IN — TO TU-60 BOARD CN001
CN007 (BLK): GND, AUDIO R OUT, AUDIO L OUT, GND, MTUE I²DET IN, AUDIO SEL OUT, GND, AUDIO L IN, AUDIO R IN, GND — TO AF-3 BOARD CN003

no mark : PAL REC mode
( ) : PAL PB mode
< > : SECAM REC mode
[ ] : SECAM PB mode
✳ : Can not be measured

1-612-339 12

When indicating parts by reference number, please include the board name.

20 21 22 23 24 25 26 27

| | | |

SS-28 (SERVO/SYSTEM CONTROL), FU-22 (FUNCTION SWITCH & IND), TR-14 (TRACKING CONTROL), RD-6 (ROTATION DETECTOR), RD-7 (ROTATION DETECTOR), LM-8 (NOISE FILTER), CS-3 (CASSETTE ON SWITCH), CS-4 (CASSETTE I

– Ref. No. SS-28 BOARD : 4000 series, FU-22 BOARD : 7000 series, TR-14 BOARD : 5000 series, RD-6 BOARD : 6700 series, RD-7 BOARD : 6800 series, LM-8 BOARD : 7000 series, CS-3, CS-4 BOARD : 6000 series, PT-7 BOARD : 7700 series, REEL MOTOR BOARD : 7500 series –

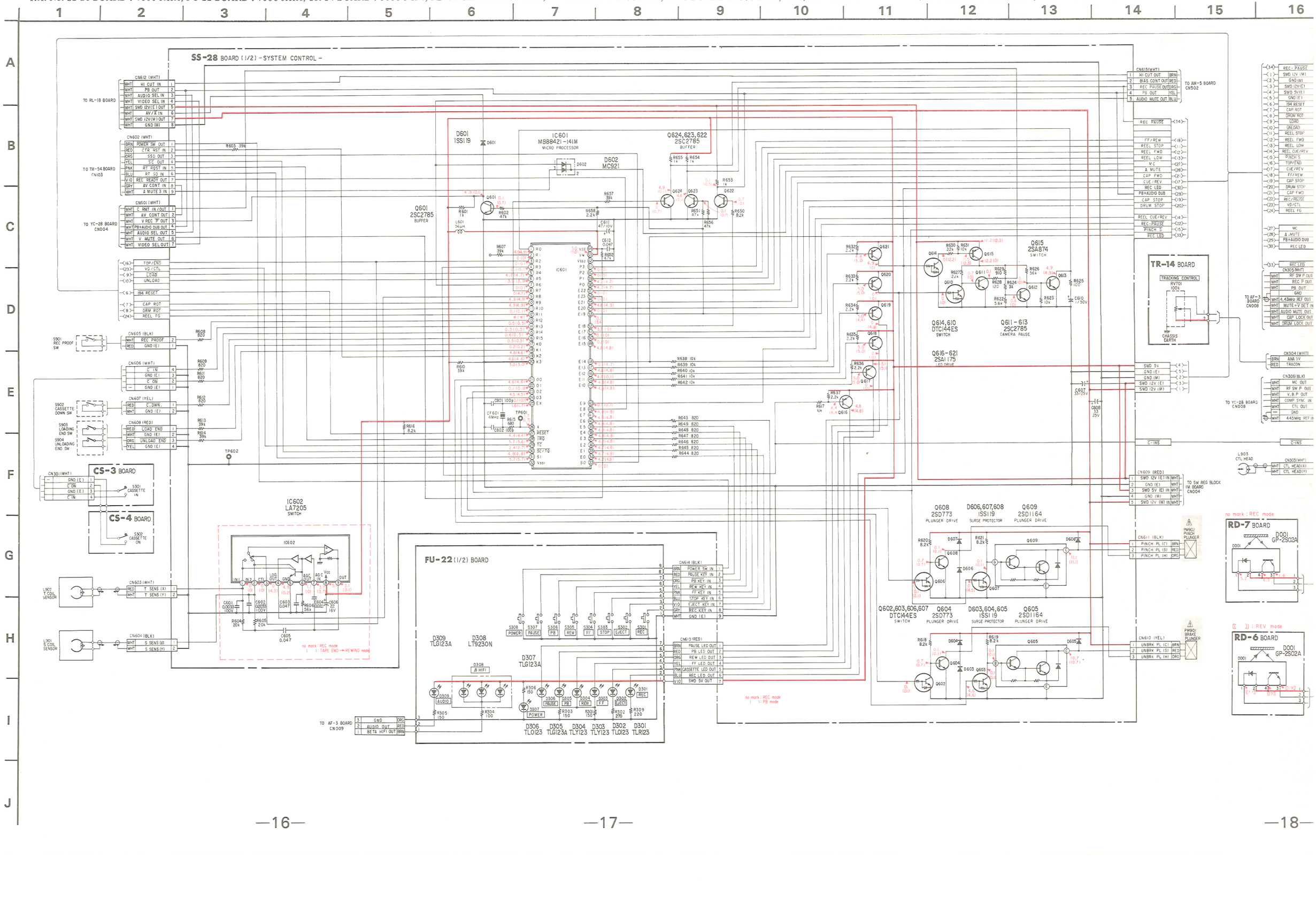

TOR), LM-8 (NOISE FILTER), CS-3 (CASSETTE ON SWITCH), CS-4 (CASSETTE IN SWITCH), PT-7 (REEL & CAPSTAN MOTOR DRIVE), CAPSTAN MOTOR, REEL MOTOR SCHEMATIC DIAGRAM

00 series, PT-7 BOARD : 7700 series, REEL MOTOR BOARD : 7500 series –

11 12 13 14 15 16 17 18 19 20 21 22 23 24 25 26 27

SS-28 BOARD(1/2)-SERVO-

IC301 CX1948-0 SERVO

TR-14 BOARD

RD-7 BOARD

RD-6 BOARD

no mark : REC mode
( ) : PB mode
< > : CUE mode
[ ] : FF/REW mode
(( )) : LOADING/THREADING mode
« » : EJECT mode
][ ] : REV mode

OTOR DRIVE), CAPSTAN MOTOR, REEL MOTOR SCHEMATIC DIAGRAM

19 20 21 22 23 24 25 26 27 28 29 30 31 32 33 34 35

A B C D E F G H I J

no mark : REC mode
( ) : PB mode
< > : CUE mode
[ ] : FF/REV mode
(( )) : LOADING/THREADING mode
« » : EJECT mode
[[ ]] : REV mode

PT-7 (1/2) BOARD

CAPSTAN MOTOR BOARD

REEL MOTOR BOARD

LM-8 BOARD

When indicating parts by reference number, please include the board name.

SS-28 (SERVO/SYSTEM CONTROL), FU-22 (FUNCTION SWITCH & IND), TR-14 (TRACKING CONTROL), RD-6 (ROTATION DETECTOR), RD-7 (ROTATION DETECTOR), LM-8 (NOISE FILTER), CS-3 (CASSETTE ON SWITCH), CS-4 (CASSETTE IN SWIT

– Ref. No. SS-28 BOARD : 4000 series, FU-22 BOARD : 7000 series, TR-14 BOARD : 5000 series, RD-6 BOARD : 6700 series, RD-7 BOARD : 6800 series, LM-8 BOARD : 7000 series, CS-3, CS-4 BOARD : 6000 series, PT-7 BOARD : 7700 series, REEL MOTOR BOARD : 7500 series –

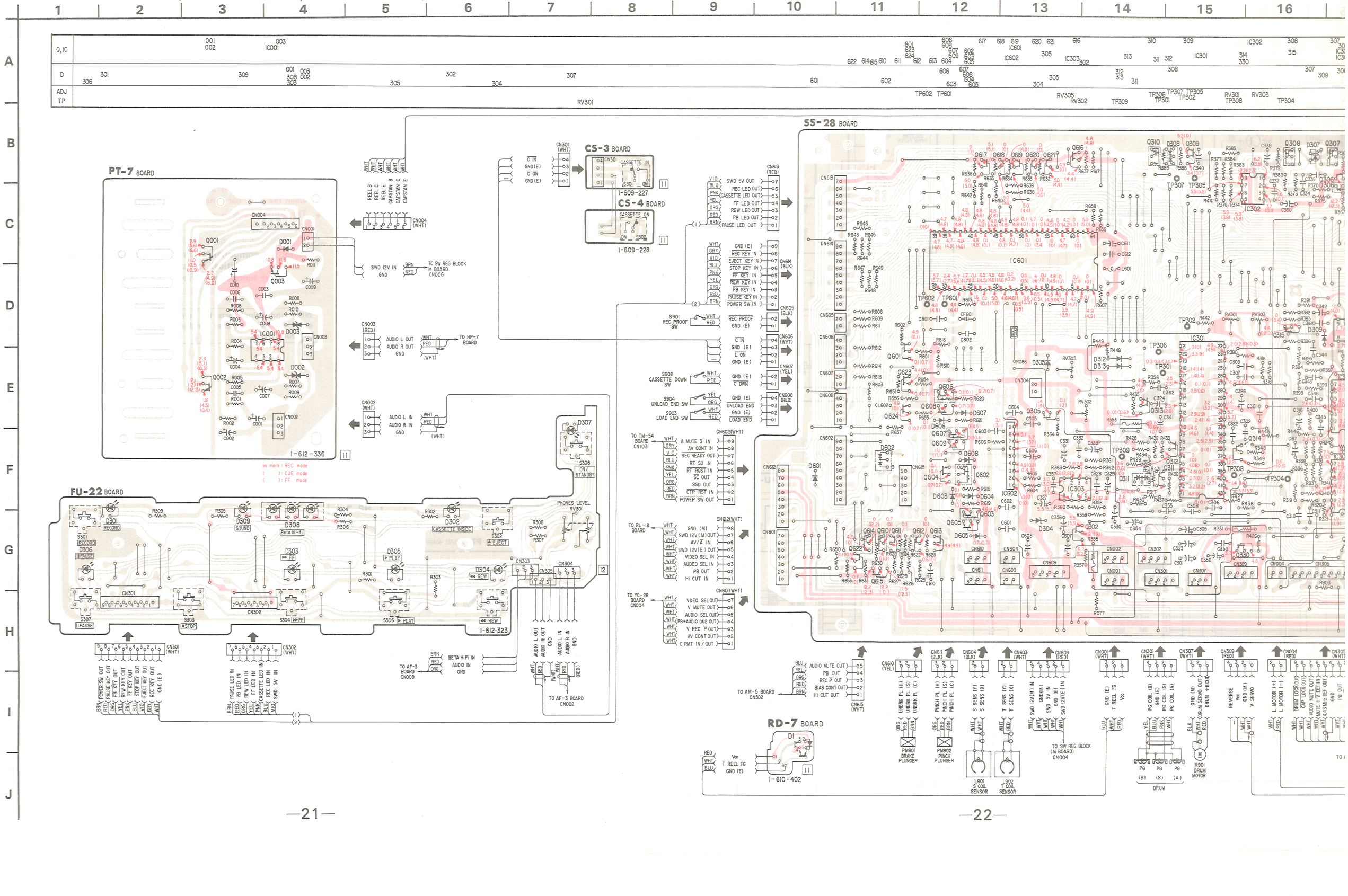

CS-4 (CASSETTE IN SWITCH), PT-7 (REEL & CAPSTAN MOTOR DRIVE), CAPSTAN MOTOR, REEL MOTOR PRINTED WIRING BOARDS

5 16 17 18 19 20 21 22 23 24 25 26 27 28 29 30 31

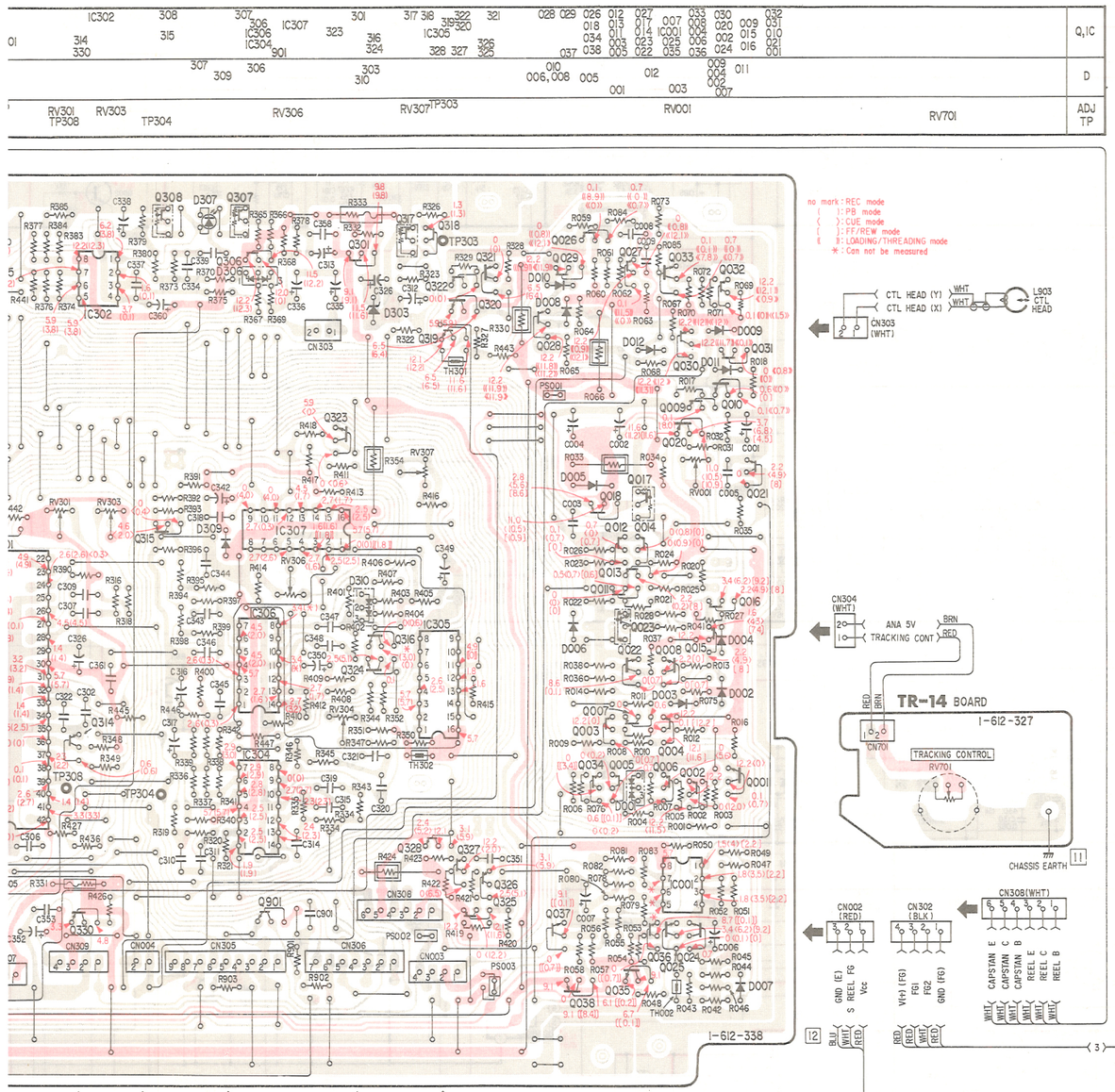

Note:
- All resistors are in ohms, 1/6W unless otherwise noted.
- All capacitors are in μF (p:pF) unless otherwise noted. 50V or less are not indicated except for electrolytic capacitors.
- All variable and semi-fixed resistors have characteristic curve B, unless otherwise noted.
- : Nonflammable resistor
- : Fusible resistor
- : B + bus.
- The voltage value is a reference value between the grounding when the color bar signal is received from a color bar generator.
- The voltage value is measured using a digital tester (10MΩ).

Note: The components identified by shading and mark ⚠ are critical for safety. Replace only with part number specified.

When indicating parts by reference number, please include the board name.

Note:
- : indicates a lead wire mounted on the component side.
- : indicates a lead wire mounted on the printed side.
- : soldering side
- : component side
- : B+ pattern

A B C D E F G H I J

AUDIO AUDIO

AF-3 (AFM SIGNAL RECORD/PLAYBACK PROCESS), AM-5 (AUDIO SIGNAL REC/PB PROCESS), RL-18 (LEVEL METER DRIVE), FU-22 (HEADPHONE LEVEL), PT-7 (HEADPHONE AMP), HP-7 (HEADPHONE JACK), SW-31 (FUNCTION SWITCH), SV-12 (
– Ref. No. AF-3 BOARD : 3000 series, AM-5 BOARD : 2000 series, RL-18 BOARD : 5000 series, FU-22 BOARD : 7000 series, PT-7 BOARD : 7700 series, HP-7 BOARD : 5000 series, SW-31 BOARD : 6000 series, SV-12 BOARD : 6000 series, DM-10 BOARD : 9000 series –

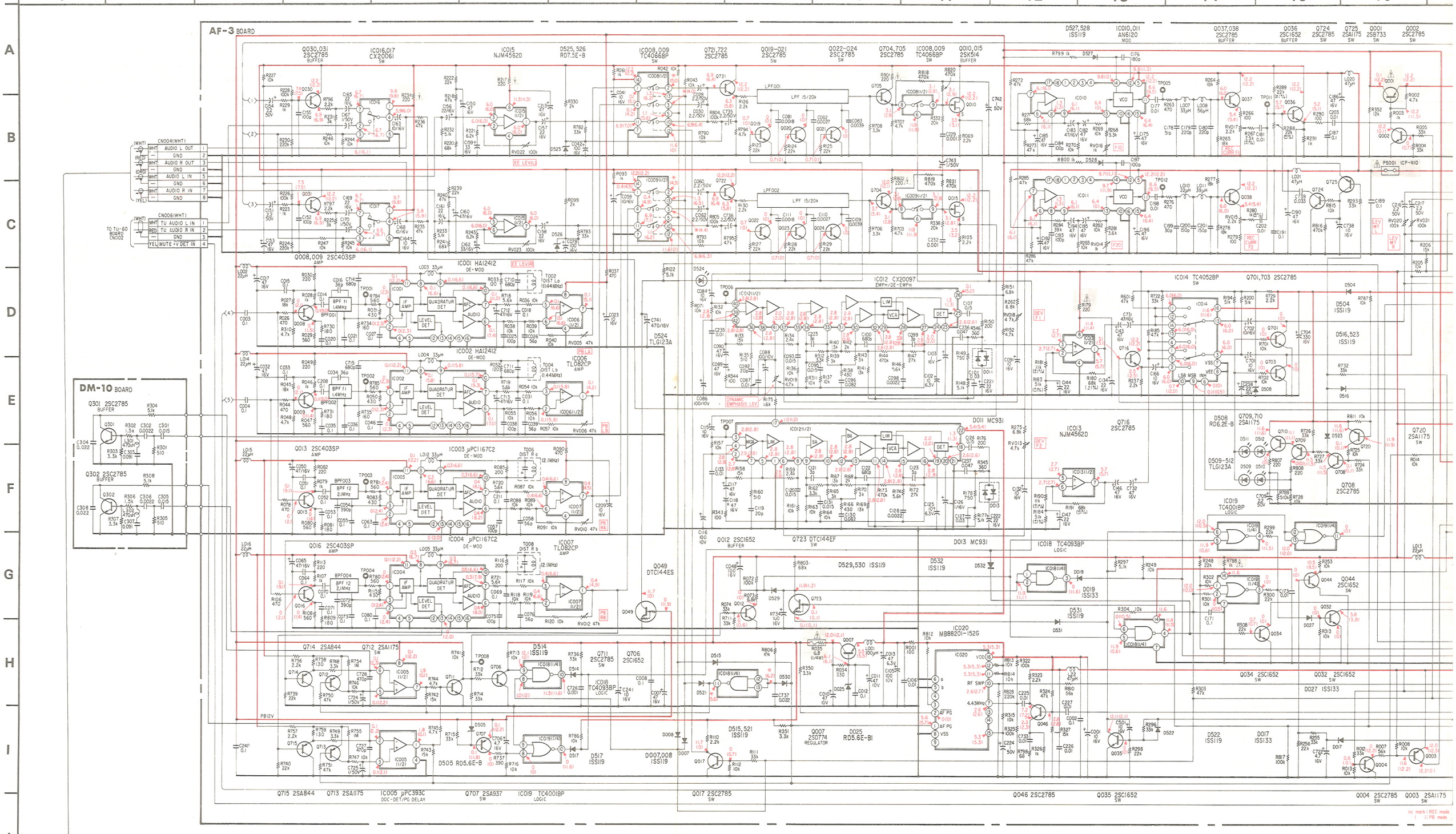

FUNCTION SWITCH), SV-12 (AUDIO LEVEL), DM-10 (AFM PROCESS), LEVEL METER UNIT SCHEMATIC DIAGRAM

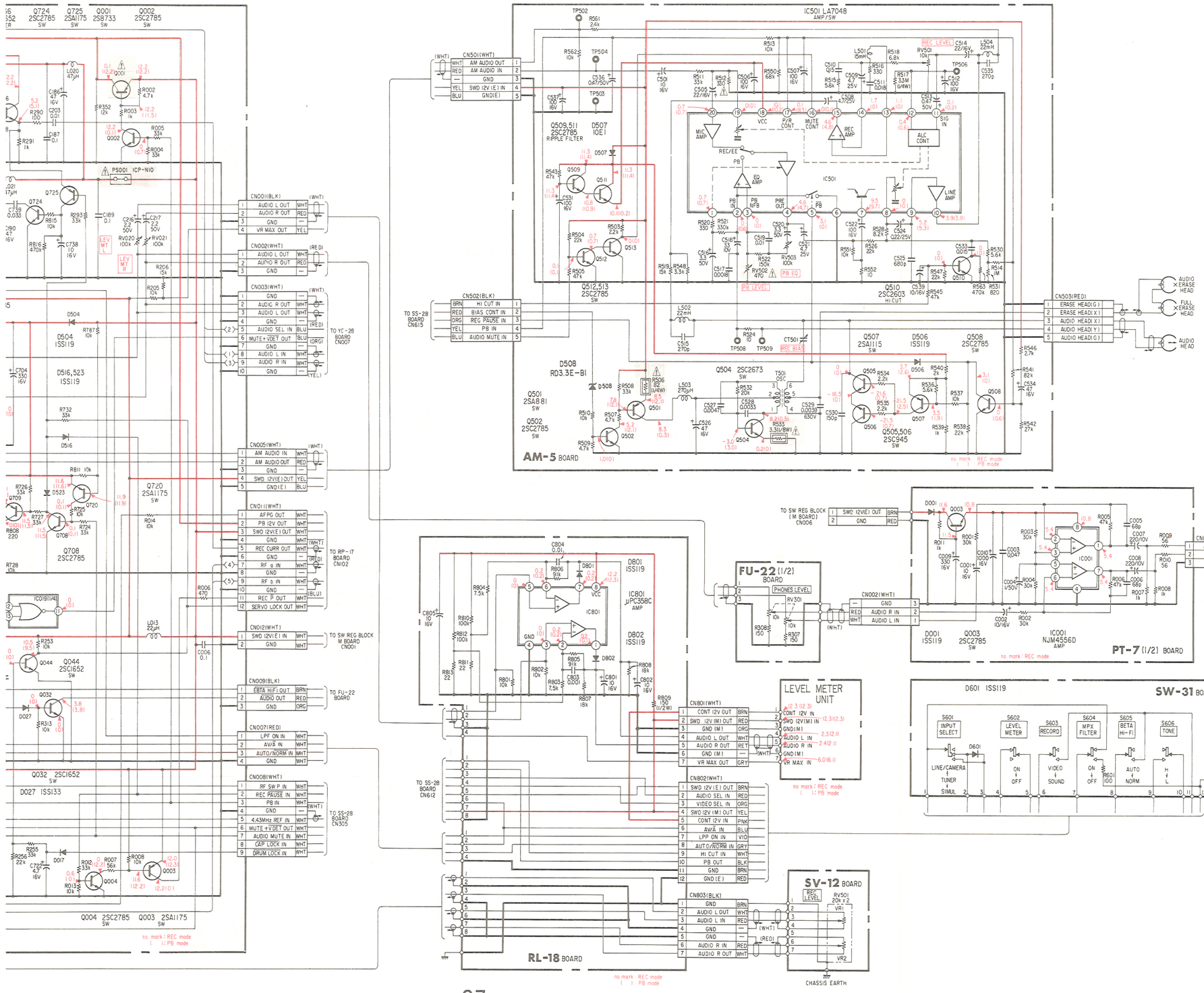

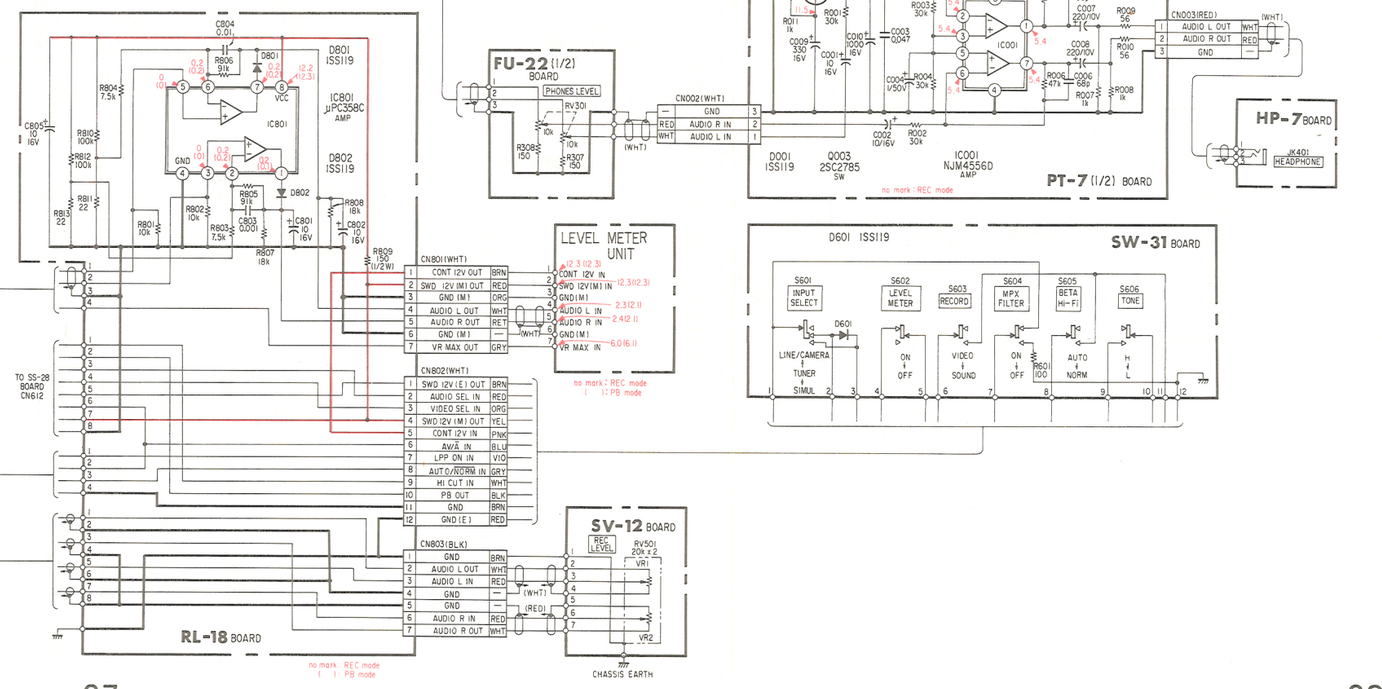

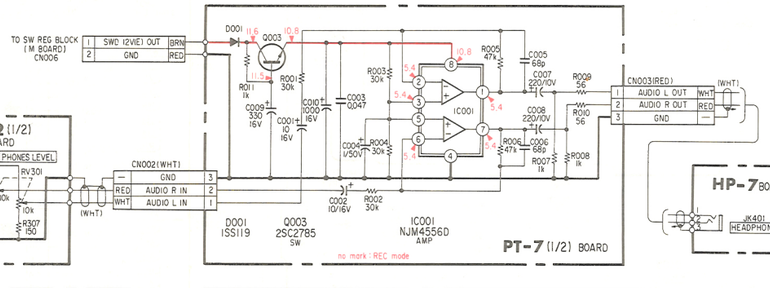

Note:

- All resistors are in ohms, 1/6W unless otherwise noted.
- All capacitors are in μF (p:pF) unless otherwise noted. 50V or less are not indicated except for electrolytic capacitors.
- All variable and semi-fixed resistors have characteristic curve B, unless otherwise noted.
- : Nonflammable resistor
- : Fusible resistor
- : B + bus.
- The voltage value is a reference value between the grounding when the color bar signal is received from a color bar generator.
- The voltage value is measured using a digital tester (10MΩ).

Note: The components identified by shading and mark ⚠ are critical for safety. Replace only with part number specified.

When indicating parts by reference number, please include the board name.

AF-3 (AFM SIGNAL RECORD/PLAYBACK PROCESS), AM-5 (AUDIO SIGNAL REC/PB PROCESS), RL-18 (LEVEL METER DRIVE), FU-22 (HEADPHONE LEVEL), PT-7 (HEADPHONE AMP), HP-7 (HEADPHONE JACK), SW-31 (FUNCTION SWITCH), SV-12 (

– Ref. No. AF-3 BOARD : 3000 series, AM-5 BOARD : 2000 series, RL-18 BOARD : 5000 series, FU-22 BOARD : 7000 series, PT-7 BOARD : 7700 series, HP-7 BOARD : 5000 series, SW-31 BOARD : 6000 series, SV-12 BOARD : 6000 series, DM-10 BOARD : 9000 series –

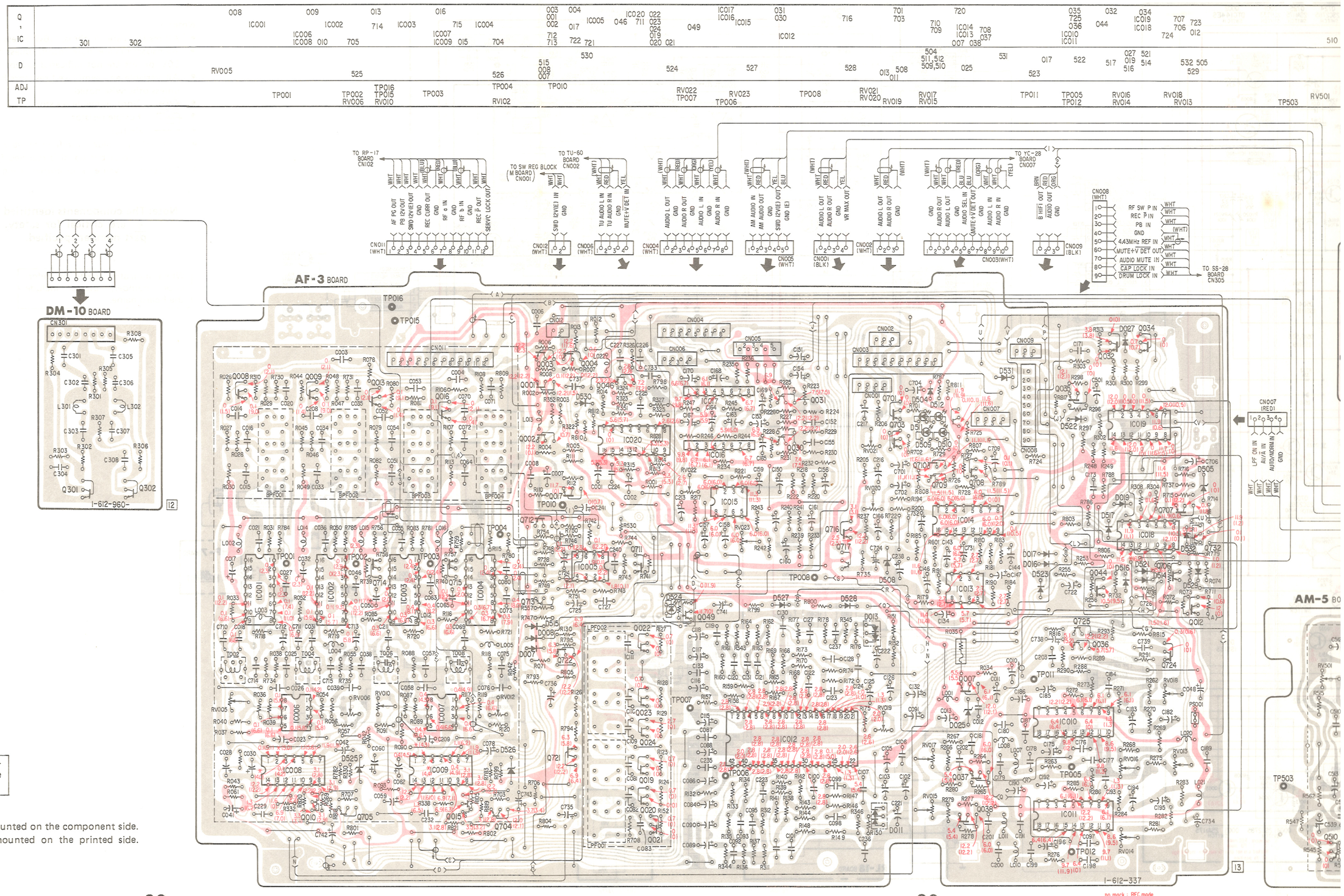

When indicating parts by reference number, please include the board name.

Note:

- ○— : indicates a lead wire mounted on the component side.
- ●— : indicates a lead wire mounted on the printed side.
- : soldering side
- : B+ pattern

JNCTION SWITCH), SV-12 (AUDIO LEVEL), DM-10 (AFM PROCESS), LEVEL METER UNIT PRINTED WIRING BOARDS

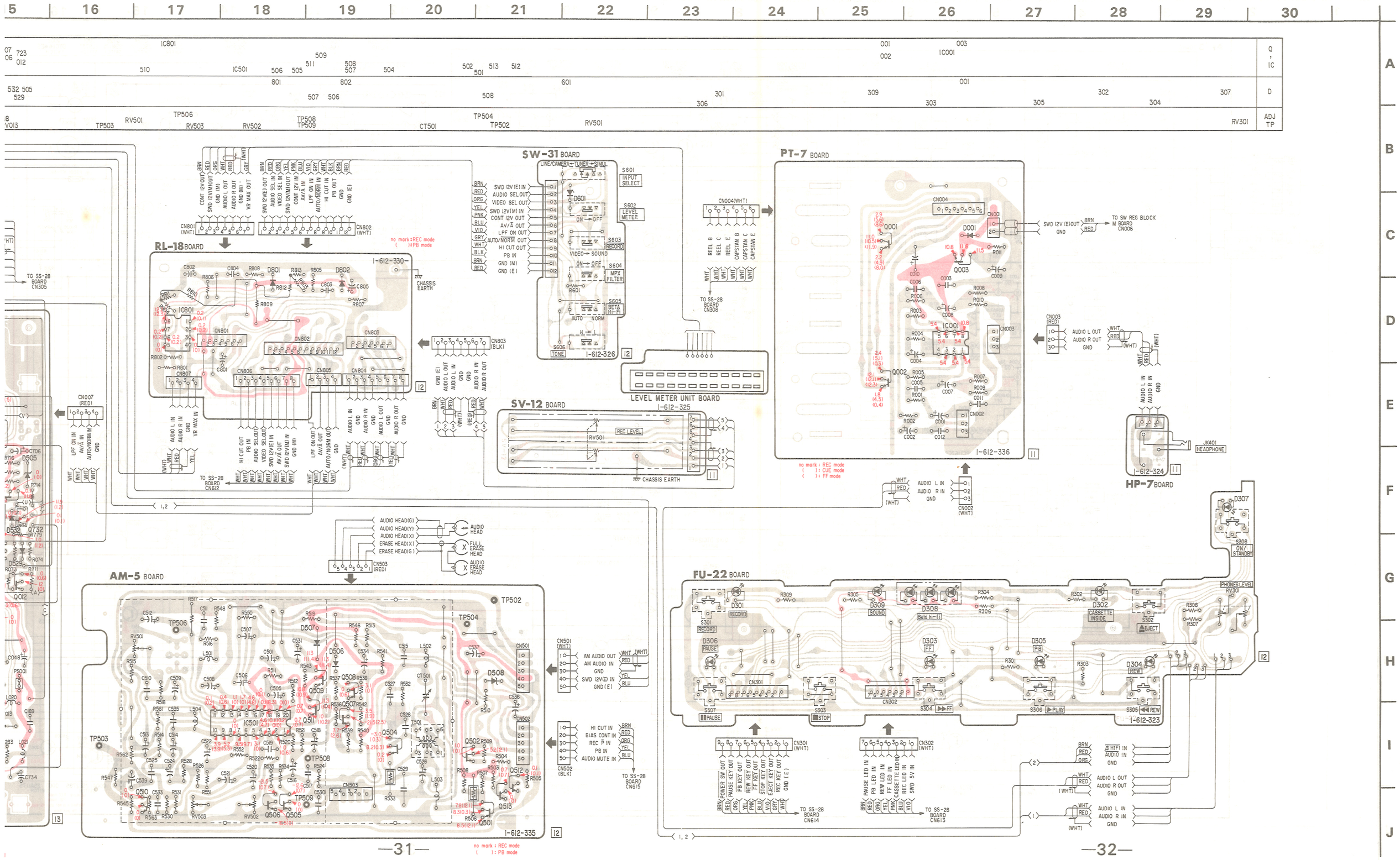

AF-3 (AFM SIGNAL RECORD/PLAYBACK PROCESS), AM-5 (AUDIO SIGNAL REC/PB PROCESS), RL-18 (LEVEL METER DRIVE), FU-22 (HEADPHONE LEVEL), PT-7 (HEADPHONE AMP), HP-7 (HEADPHONE JACK), SW-31 (FUNCTION SWITCH), SV-12

– Ref. No. AF-3 BOARD : 3000 series, AM-5 BOARD : 2000 series, RL-18 BOARD : 5000 series, FU-22 BOARD : 7000 series, PT-7 BOARD : 7700 series, HP-7 BOARD : 5000 series, SW-31 BOARD : 6000 series, SV-12 BOARD : 6000 series –

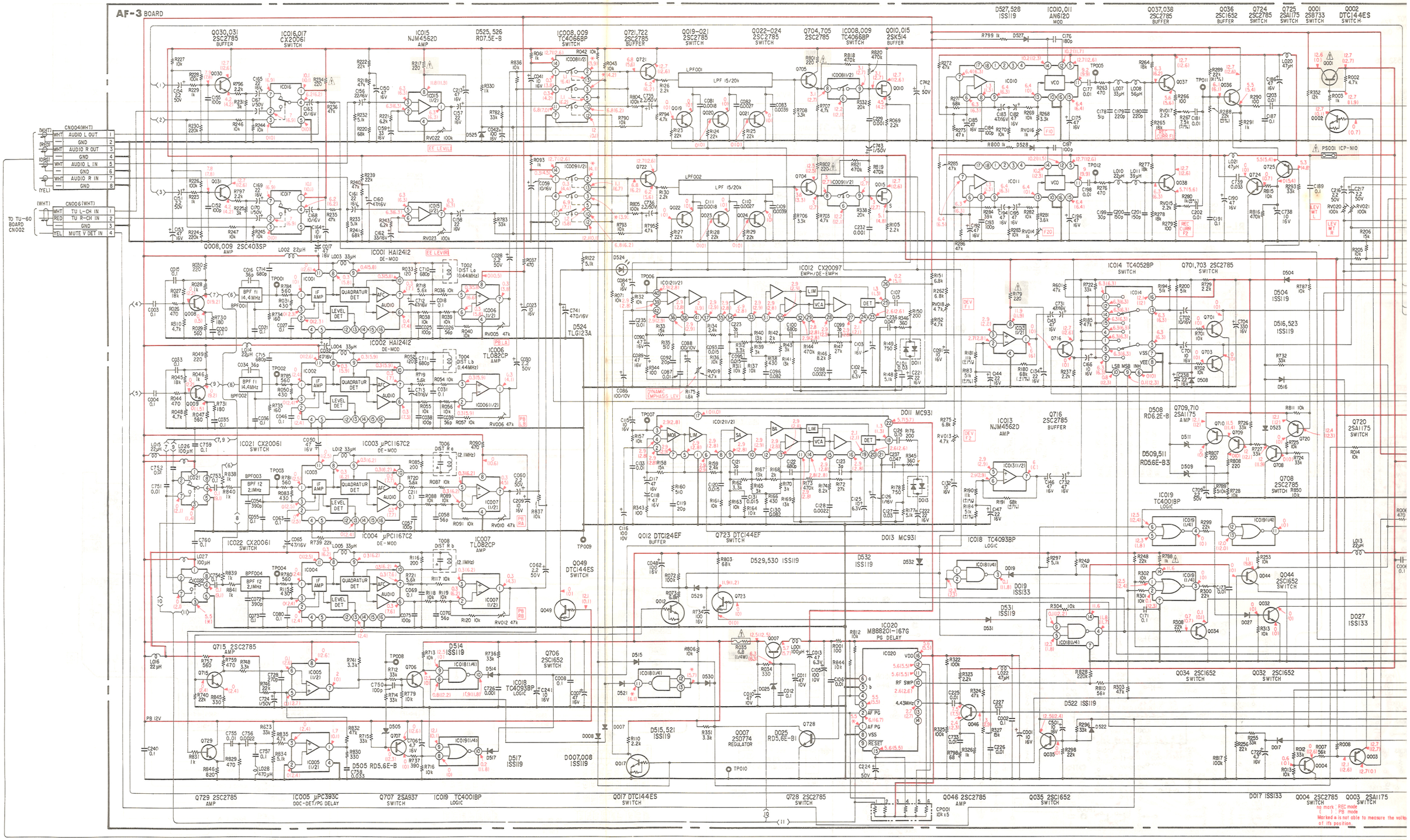

(FUNCTION SWITCH), SV-12 (AUDIO LEVEL), LEVEL METER UNIT SCHEMATIC DIAGRAM

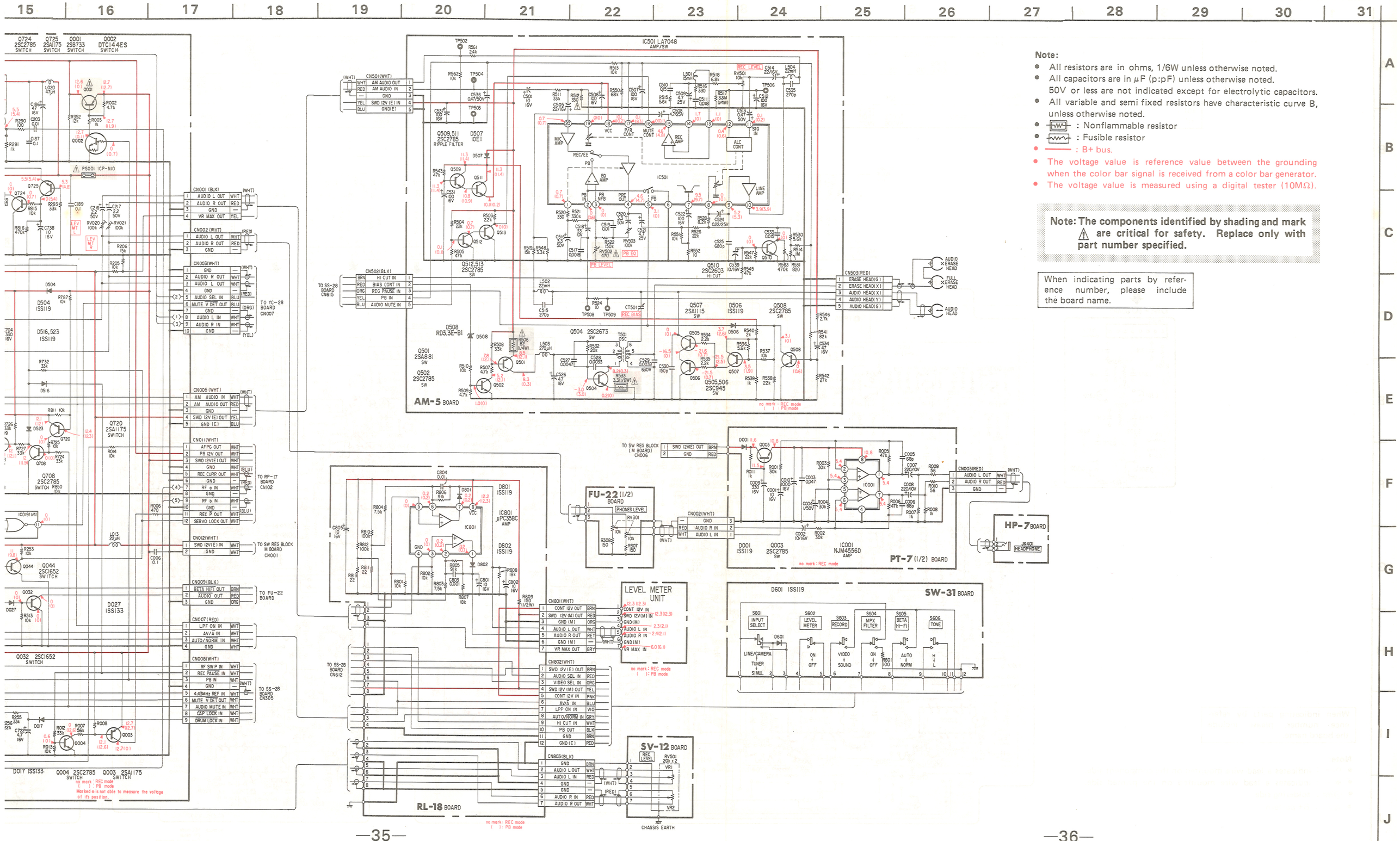

Note:

- All resistors are in ohms, 1/6W unless otherwise noted.
- All capacitors are in μF (p:pF) unless otherwise noted. 50V or less are not indicated except for electrolytic capacitors.
- All variable and semi fixed resistors have characteristic curve B, unless otherwise noted.
- : Nonflammable resistor
- : Fusible resistor
- : B+ bus.
- The voltage value is reference value between the grounding when the color bar signal is received from a color bar generator.
- The voltage value is measured using a digital tester (10MΩ).

Note: The components identified by shading and mark ⚠ are critical for safety. Replace only with part number specified.

When indicating parts by reference number, please include the board name.

AF-3 (AFM SIGNAL RECORD/PLAYBACK PROCESS), AM-5 (AUDIO SIGNAL REC/PB PROCESS), RL-18 (LEVEL METER DRIVE), FU-22 (HEADPHONE LEVEL), PT-7 (HEADPHONE AMP), HP-7 (HEADPHONE JACK), SW-31 (FUNCTION SWITCH), SV-12 (AF

– Ref. No. AF-3 BOARD : 3000 series, AM-5 BOARD : 2000 series, RL-18 BOARD : 5000 series, FU-22 BOARD : 7000 series, PT-7 BOARD : 7700 series, HP-7 BOARD : 5000 series, SW-31 BOARD : 6000 series, SV-12 BOARD : 6000 series –

Note:

- : indicates a lead wire mounted on the component side.
- : indicates a lead wire mounted on the printed side.
- : soldering side
- : B+ pattern

When indicating parts by reference number, please include the board name.

Q, IC	D	RV, TP
032 034	027	
008 009 003		
IC022 004 001, 046	531	
IC02, IC017 031 035 701	504 530	
703 720 IC019	511 522	RV021
002 IC020 030 IC016	509	
710 708		RV020
709	505	RV022
017 707 IC015	019	TP003
IC014 723 728 IC018 716	517 532	TP010 TP004
715		RV023
IC005 706	017 515	TP001 TP002
044 IC001, IC002 IC003 IC004 IC013	521 508 514 516 529 523	TP008
729 049 012	528 524,527	
725 724 036	013	TP009
022	008 007	
722		TP011 RV018 RV006 RV010 RV012 RV005 TP007
007 023 IC006 IC007 IC010	025	RV019
IC012 024 721		RV016 RV017 RV013 TP005 TP006
019 IC008 IC009,037 020 010 015	525	
705 704 038 IC011 021	011	RV015 RV014 TP012

Q, IC	D	RV, TP

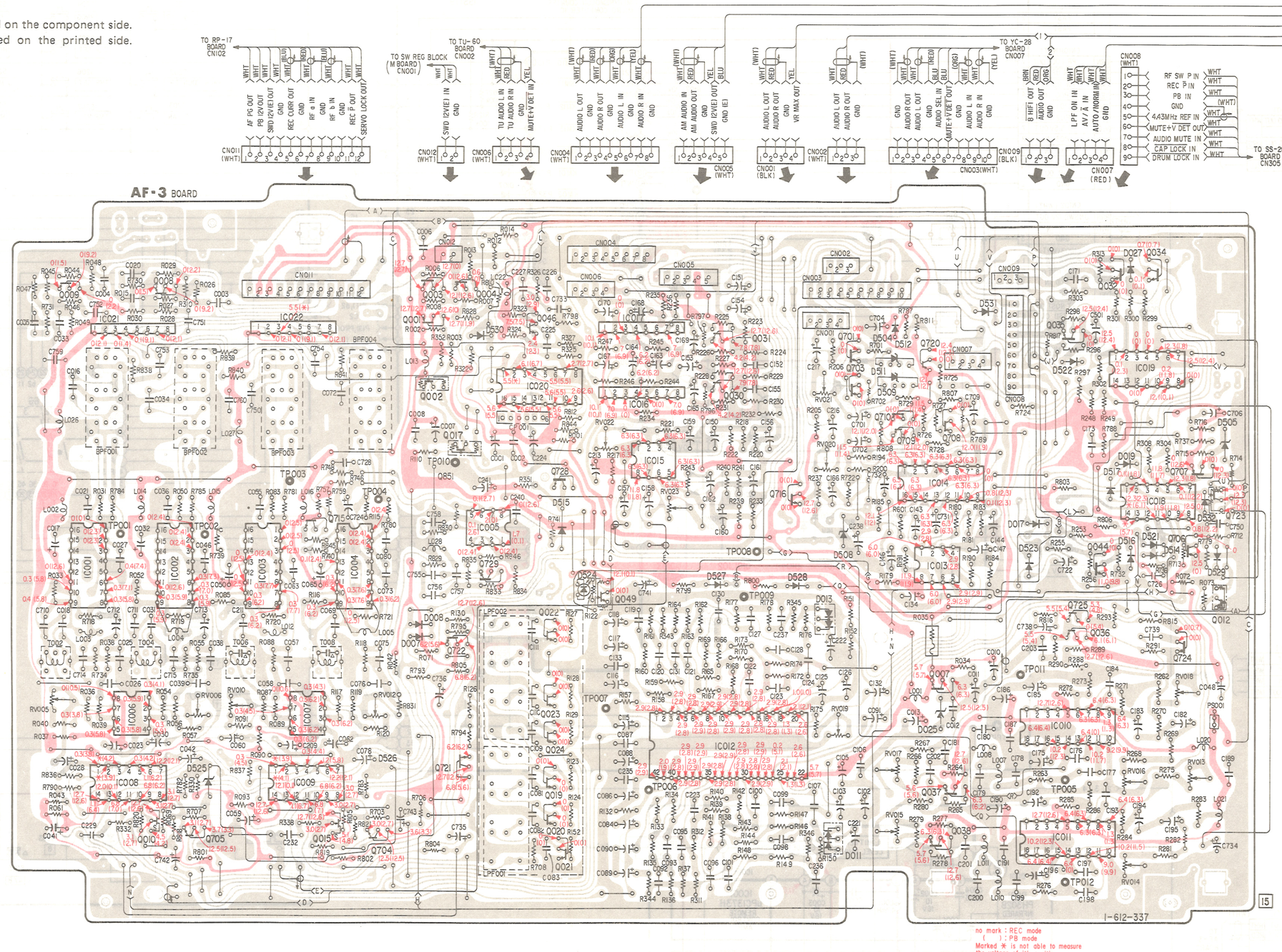

Q, IC	D	ADJ, TP
	601	
001	001	
003		
	801 802	
IC801 IC001		
002		RV501
	307	
	301, 309, 308 302	TP502 RV301 TP504 TP506
	507 506	RV501
	306, 303, 305 304	
509, 508	508	
		CT501
511, 507 IC501		
504		TP503
502		TP508
512 513		RV503 RV502 TP509
510, 506 505, 501		

Q, IC	D	ADJ, TP

no mark : REC mode
( ) : PB mode
Marked * is not able to measure the voltage of it's position

15 16 17 18 19 20 21 22 23 24 25 26 27 28 29 30

A B C D E F G H I J

, IC	D	ADJ, TP
	601	
	001	
003		
	801 802	
IC001		
002		
		RV501
	307	
	301,309,308 302	TP502 RV301 TP504 TP506
	507 506	RV501
	306,303,305 304	
508	508	
		CT501
507		
501		
504		TP503
502		TP508
512		
513		RV503 RV502 TP509
506		
501		
, IC	D	ADJ, TP

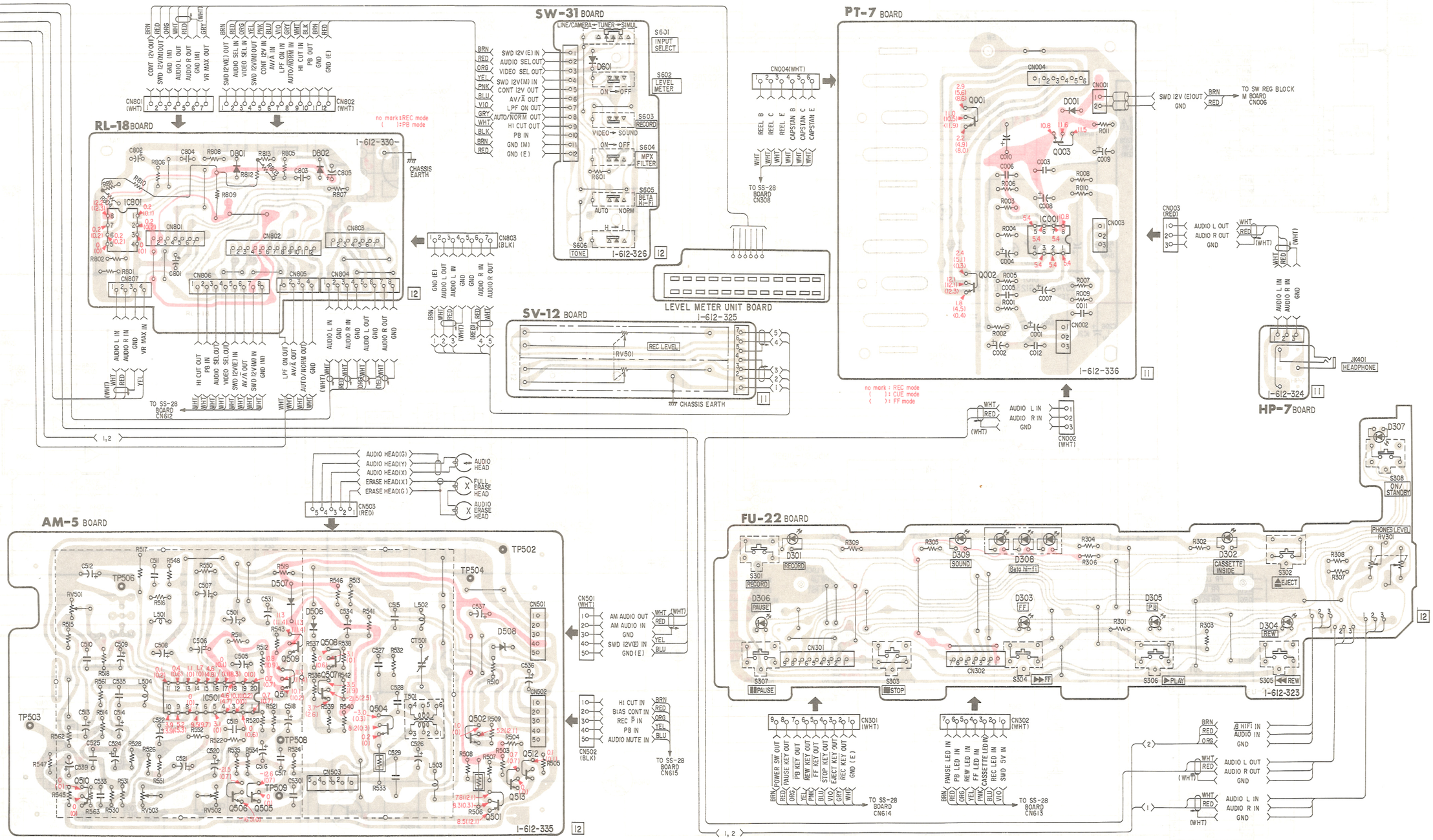

TU-60 (VIF, SIF, AFT, AGC CHANNEL PRESET), MT-9 (TUNER), TM-54 (TIMER, REMOTE CONTROL, COUNTER), TM-55 (CHANNEL SWITCH, TIMER SWITCH), N (INFRARED AMP) SCHEMATIC DIAGRAM

– Ref. No. TU-60, MT-4 BOARD : 5000 series, TM-54 BOARD: 6000 series, TM-55 BOARD : 6000 series, N BOARD : 6400 series –

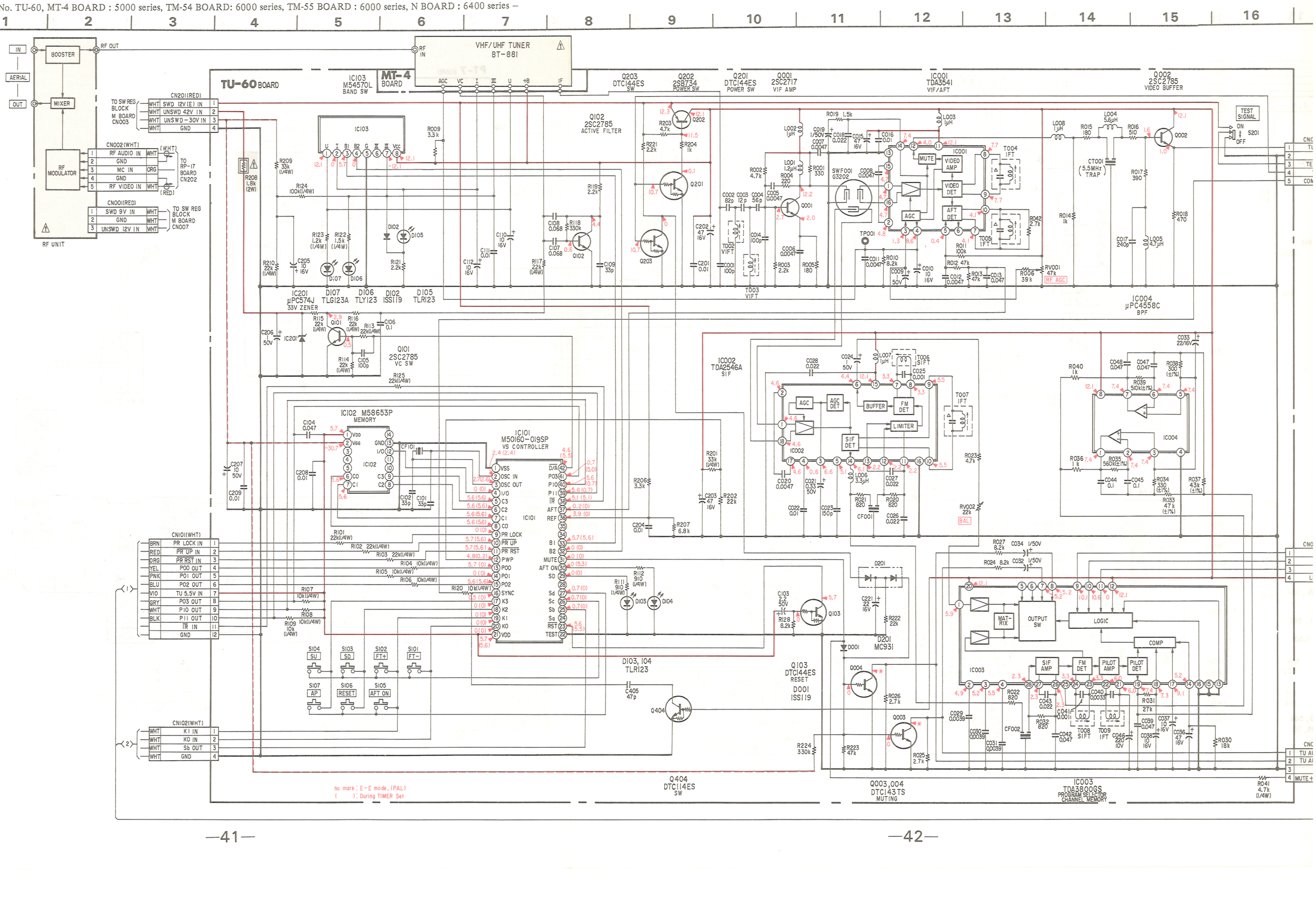

15 16 17 18 19 20 21 22 23 24 25 26 27 28 29 30

A B C D E F G H I J

Q002 2SC2785 VIDEO BUFFER

TEST SIGNAL

ON OFF S201

Q002

CN001(WHT) (WHT)

1	TU VIDEO OUT	WHT
2	GND	
3	TEST SIG OUT	ORG
4	TU EE IN	YEL
5	COMP SYNC IN	BLU

TO VC-28 BOARD CN006

R018 470

L005 4.7μH

C033 22/16V

R038 300 (±1%)

IC004

R034 330 (±1%)

R037 43k (±1%)

R033 47k (±1%)

CN003(BLK)

1	Ā OUT	WHT
2	B̄ OUT	WHT
3	Ā/B IN	WHT
4	LED 12V OUT	WHT

C037 10 16V

C036 47 16V

R030 18k

CN002(WHT) (WHT)

1	TU AUDIO L OUT	WHT
2	TU AUDIO R OUT	RED
3	GND	
4	MUTE+V DET OUT	YEL

TO AF-3 BOARD CN006

R041 4.7k (1/4W)

TM-54 BOARD

IC101 μPD7519G-132 TIMER/REMOCON/COUNTER MICRO COMPUTER IC

DI05-107 ISS119

CN106(WHT)

	FAST	2
	FAST	1

CN101(WHT)

BRN	PR LOCK OUT	1
RED	PR UP OUT	2
ORG	PR RST OUT	3
YEL	P00 IN	4
PNK	P01 IN	5
BLU	P02 IN	6
VIO	TU 5.5V OUT	7
GRY	P03 IN	8
WHT	P10 IN	9
BLK	P11 IN	10
	IR OUT	11
	GND	12

CN102(WHT)

BRN	UNSWD 12V OUT	1
WHT	IR IN	2
	GND	3

CN103(WHT)

BRN	POWER SW IN	1
RED	CTR RST OUT	2
ORG	SSD IN	3
YEL	SC IN	4
PNK	RT ROST OUT	5
BLU	RTSD OUT	6
VIO	REC READY IN	7
GRY	AV CONT OUT	8
WHT	PWR ON MUTE OUT	9

TO SS-28 BOARD CN602

CN104(WHT)

WHT	UNSWD -30V IN	1
WHT	3.2V AC IN	2
WHT	3.2V AC IN	3
WHT	UNSWD 6.2V IN	4
WHT	POWER ON OUT	5
WHT	GND	6
WHT	UNSWD 12V IN	7

TO SW REG BLOCK M BOARD CN005

R101 68k R102 100k R121 33k R122 22k R129 75

R107 10k R103 10k R108 10k R104 10k R105 10k R106 10k R111 10k R109 10k R110 10k

TP101 TP102

C104 0.1 C105 0.047 C108 0.082 C109 0.082 C102 0.1 C106 22/50V C103 0.068 C108 33 16V C101 3.3 50V

R112 33k R113 51k R116 36k R114 200k R115 1M R117 62k R118 39k R119 100k R123 1k R124 3.3k R120 10k

DI01 DI02 DI03 DI04

Q101 Q102 Q103 Q104

DI02,103 ISS119 DI01 TLR123 DI04 RD9.1E-B Q101,102 2SC2785 SW Q103 2SA1175 SW Q104 2SC2785 SW

DI05 DI06 DI07

R125 100k R126 100k R127 100k R128 100k

KM10 KM11 KM12 KM13 KM00 KM01 KM02

S0 S1 S2 S3 S4 S5 S6 S7 S9 S12 S13 S14 S15

IG 2G 3G 4G 5G 6G 7G TIMER LED P(1),d2 C2 P(3),PROG P(4), f2 a2, e2, g2

T0 T1 T2 T3 T4 T5 T6 T7 T8 S11 X2 X1

a, a1 b, b1 c, c1 d, d1 e, e1 f, f1 g, g1 b2

X101 4.194304MHz CLOCK ADJ CT101 20p CI07 22p

TV/VTR LED CTR RST GND FL FL

no mark : E-E mode
( ) : During TIMER set
* : Can not be measured.

TM-55 BOARD

S201 TV/VTR S202 TIMER/COUNTER S203 CLEAR S204 PROG S205 CLK SET S206 TMR SET S207 TMR REC S208 DAY S209 HOUR S210 10 MIN S211 MIN

FLUORESCENT DISPLAY TUBE FL201

15 16 18 19 21 22 24 25 27 29 30 31 32 34 35

g2 f2 a2 e2 d2 c2 b2 f1 g1 e1 d1 c1 b1 a1 plog.

a b c d e f g P(1) P(3) P(4)

7G 6G 5G 4G 3G 2G 1G PROG

IG 2G 3G 4G 5G 6G 7G

P(2) P(1)

R202 220 D202 TLR123 TIMER LED

R201 220 D201 TLR123 TV/VTR LED

S212 COUNTER RESET

D204 TLR123 D203 TLR123

LED 12V IN Ā/B OUT B̄ IN Ā IN

K1 OUT KO OUT Sb IN GND

S213 DN S214 UP

D204 A D203 B

S215 A/B

2,3,4

N BOARD

D001 PH302B INFRARED DETECTOR

LIMITTER LEVEL SHIFT PEAK DET SHAPER ABLC

IC001 μPC1373H REMOTE CONTROL AMP

UNSWD 12V IN IR OUT GND

C004 0.033 C002 10 16V C001 10 16V C006 47 16V L001 4.7mH C005 0.0033 C003 10 16V

1k 47 ISS119 150k 100k 560

CP001

TU-60 (VIF, SIF, AFT, AGC CHANNEL PRESET), MT-9 (TUNER), TM-54 (TIMER, REMOTE CONTROL, COUNTER), TM-55 (CHANNEL SWITCH, TIMER SWITCH), N (INFRARED AMP) PRINTED WIRING BOARDS

– Ref. No. TU-60, MT-4 BOARD : 5000 series, TM-54 BOARD: 6000 series, TM-55 BOARD : 6000 series, N BOARD : 6400 series –

Q, IC	D	ADJ, TP
002		
003, 004	201	
203	001	
IC001, IC003		RV002
201	103	
202		
IC002		
IC101		RV001
IC102		TP001
001		
IC004		
102		
	104	
IC201, 101, 404	105, 106, 104	
	102	
IC103		
	103	

TU-60 BOARD

TM-54 BOARD

TM-55 BOARD

MT-4 BOARD

RF UNIT

UHF/VHF TUNER BT-881

TU001 UHF/VHF TUNER BT-881

I-612-333-

I-612-328-

I-612-329-

I-610-400-

no mark : E-E mode (PAL)
( ) : During TIMER Set
* : Can not be measured

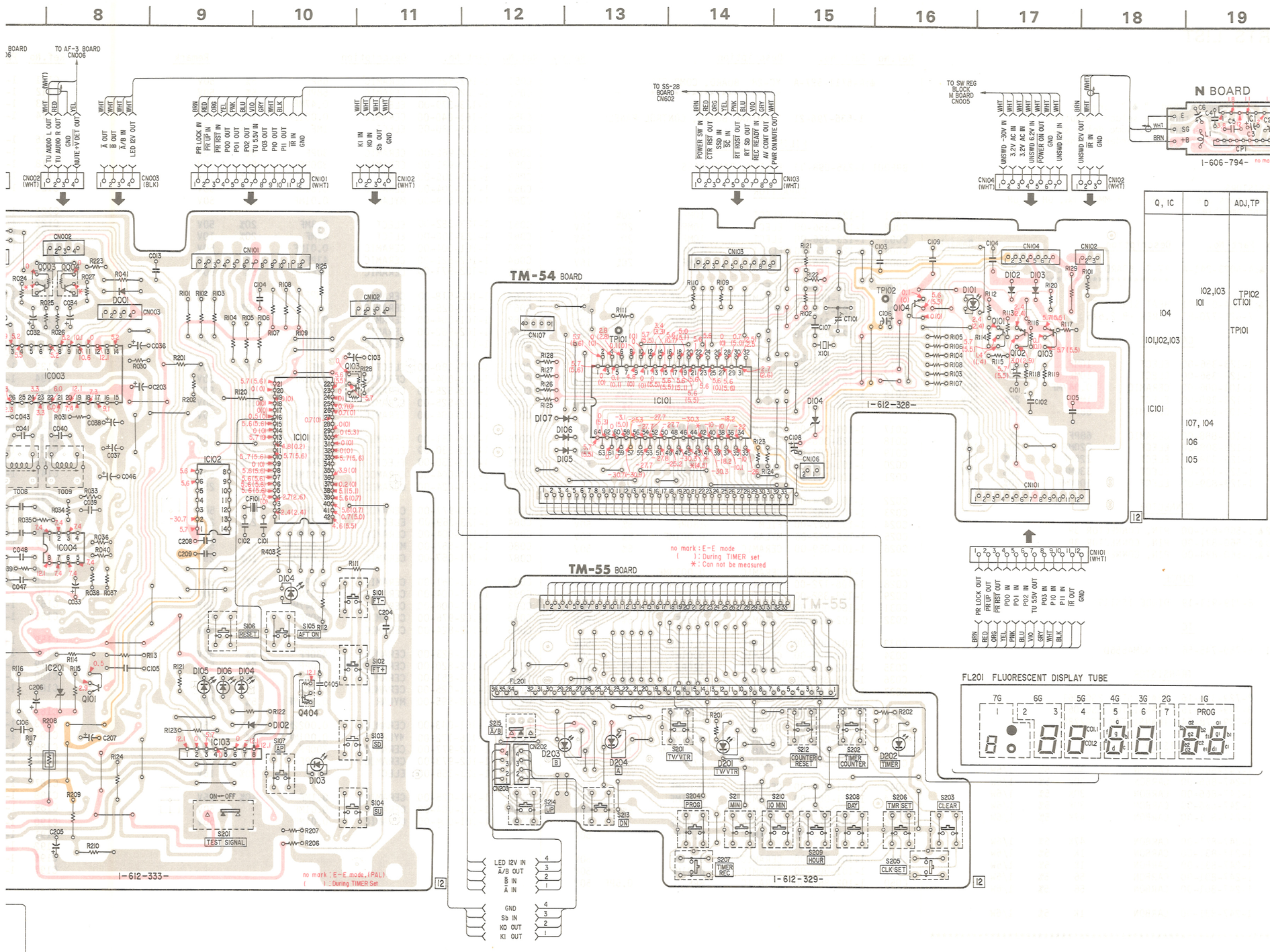

Note:

- All resistors are in ohms, 1/6W unless otherwise noted.
- All capacitors are in μF (p:pF) unless otherwise noted. 50V or less are not indicated except for electrolytic capacitors.
- All variable and semi-fixed resistors have characteristic curve B, unless otherwise noted.
- : Nonflammable resistor
- : Fusible resistor
- : B + bus.
- : B- bus.
- The voltage value is a reference value between the grounding when the color bar signal is received from a color bar generator.
- The voltage value is measured using a digital tester (10MΩ).

Note: The components identified by shading and mark ⚠ are critical for safety. Replace only with part number specified.

When indicating parts by reference number, please include the board name.

Note:

- ○— : indicates a lead wire mounted on the component side.
- ●— : indicates a lead wire mounted on the printed side.
- : soldering side
- : B+ pattern
- : B- pattern

ELECTRICAL PARTS LIST

Note:

The components identified by shading and mark ⚠ are critical for safety. Replace only with part number specified.

- =>: Due to standardization, interchangeable replacements may be substituted for parts specified in the diagrams.
- Items marked " ♦ " are not stocked since they are seldom required for routine service. Some delay should be anticipated when ordering these items.
- All variable and adjustable resistors have characteristic curve B, unless otherwise noted.

CAPACITORS
- MF : μF, PF : μμF

RESISTORS
- All resistors are in ohms
- F : nonflammable

COILS
- MMH : mH, UH : μH

Ref.No	Part No.	Description			Remark
	♦:A-4910-049-A	R STATOR (REEL MOTOR) BOARD, COMPLETE **********			
	♦:1-560-460-00	PIN, CONNECTOR 4P			
		CAPACITOR			
C1	1-123-821-00	ELECT	47MF	20% 16V	
C2	1-123-821-00	ELECT	47MF	20% 16V	
C3	1-123-821-00	ELECT	47MF	20% 16V	
C4	1-123-821-00	ELECT	47MF	20% 16V	
		DIODE			
D1	8-719-941-48	DIODE 1N4148TP			
		IC			
IC1	8-759-108-77	IC CX877			
		TRANSISTOR			
Q1	8-729-100-01	TRANSISTOR 2SD992			
Q2	8-729-100-01	TRANSISTOR 2SD992			
Q3	8-729-100-01	TRANSISTOR 2SD992			
Q4	8-729-100-01	TRANSISTOR 2SD992			
Q5	8-729-100-01	TRANSISTOR 2SD992			
Q6	8-729-100-01	TRANSISTOR 2SD992			
		RESISTOR			
R1	1-247-823-00	CARBON	470	5% 1/6W	
R2	1-247-823-00	CARBON	470	5% 1/6W	
R3	1-247-823-00	CARBON	470	5% 1/6W	
R4	1-247-829-00	CARBON	820	5% 1/6W	
R5	1-247-871-00	CARBON	47K	5% 1/6W	
R6	1-247-871-00	CARBON	47K	5% 1/6W	
R7	1-247-871-00	CARBON	47K	5% 1/6W	
R8	1-247-871-00	CARBON	47K	5% 1/6W	
		DIODE			
S1	8-719-810-31	DIODE THS103-1			
S2	8-719-810-31	DIODE THS103-1			

When indicating parts by reference number, please include the board name.

Ref.No	Part No.	Description			Remark
	♦:A-6023-241-A	PT-7 BOARD, COMPLETE **********			
	♦:3-684-037-01	HEAT SINK, PT			
	7-621-770-87	SCREW +B 2.6X5			
		CAPACITOR			
C001	1-123-356-00	ELECT	10MF	20% 16V	
C002	1-123-356-00	ELECT	10MF	20% 16V	
C003	1-101-006-00	CERAMIC	0.047MF	50V	
C004	1-123-380-00	ELECT	1MF	20% 50V	
C005	1-101-888-00	CERAMIC	68PF	5% 50V	
C006	1-101-888-00	CERAMIC	68PF	5% 50V	
C007	1-123-308-00	ELECT	220MF	20% 10V	
C008	1-123-308-00	ELECT	220MF	20% 10V	
C009	1-123-322-00	ELECT	330MF	20% 16V	
C010	1-123-839-00	ELECT	1000MF	20% 16V	
		CONNECTOR			
CN002	♦:1-560-891-00	PIN, CONNECTOR 3P			
CN003	♦:1-560-891-00	PIN, CONNECTOR 3P			
CN004	♦:1-560-894-00	PIN, CONNECTOR 6P			
		DIODE			
D001	8-719-911-19	DIODE 1SS119			
		IC			
IC001	8-759-745-56	IC NJM4556D			
		TRANSISTOR			
Q001	8-729-316-16	TRANSISTOR 2SC1061			
Q002	8-729-316-16	TRANSISTOR 2SC1061			
Q003	8-729-178-54	TRANSISTOR 2SC2785			
		RESISTOR			
R001	1-247-866-00	CARBON	30K	5% 1/6W	
R002	1-247-866-00	CARBON	30K	5% 1/6W	
R003	1-247-866-00	CARBON	30K	5% 1/6W	
R004	1-247-866-00	CARBON	30K	5% 1/6W	
R005	1-247-871-00	CARBON	47K	5% 1/6W	
R006	1-247-871-00	CARBON	47K	5% 1/6W	
R007	1-247-831-00	CARBON	1K	5% 1/6W	
R008	1-247-831-00	CARBON	1K	5% 1/6W	
R009	1-247-801-00	CARBON	56	5% 1/6W	
R010	1-247-801-00	CARBON	56	5% 1/6W	
R011	1-247-831-00	CARBON	1K	5% 1/6W	

****

Ref.No	Part No.	Description			Remark
	♦:A-6711-527-A	YC-28 BOARD, COMPLETE **********			
	1-536-796-21	TERMINAL BOARD, CONTROL PANEL			
		FILTER BAND PASS			
BPF001	1-235-098-00	FILTER, BAND PASS			
		CAPACITOR			
C001	1-123-356-00	ELECT	10MF	20% 16V	
C002	1-123-356-00	ELECT	10MF	20% 16V	
C003	1-123-356-00	ELECT	10MF	20% 16V	
C004	1-123-356-00	ELECT	10MF	20% 16V	
C005	1-123-356-00	ELECT	10MF	20% 16V	
C006	1-123-356-00	ELECT	10MF	20% 16V	
C007	1-101-004-00	CERAMIC	0.01MF	50V	
C008	1-123-332-00	ELECT	47MF	20% 16V	
C009	1-123-311-00	ELECT	1000MF	20% 10V	
C010	1-123-356-00	ELECT	10MF	20% 16V	
C011	1-123-356-00	ELECT	10MF	20% 25V	
C013	1-123-306-00	ELECT	47MF	20% 10V	
C014	1-123-381-00	ELECT	2.2MF	20% 50V	
C015	1-123-306-00	ELECT	47MF	20% 10V	
C016	1-108-589-00	MYLAR	0.027MF	5% 50V	
C017	1-101-004-00	CERAMIC	0.01MF	50V	
C018	1-123-306-00	ELECT	47MF	20% 10V	
C019	1-101-004-00	CERAMIC	0.01MF	50V	
C020	1-101-004-00	CERAMIC	0.01MF	50V	
C021	1-101-004-00	CERAMIC	0.01MF	50V	
C022	1-101-004-00	CERAMIC	0.01MF	50V	
C023	1-101-882-00	CERAMIC	51PF	5% 50V	
C024	1-130-047-00	FILM	180PF	5% 50V	
C025	1-106-172-00	MYLAR	0.001MF	5% 50V	
C026	1-101-059-00	CERAMIC	510PF	5% 50V	
C027	1-161-045-00	CERAMIC	0.0033MF	10% 25V	
C028	1-106-172-00	MYLAR	0.001MF	5% 50V	
C029	1-123-382-00	ELECT	3.3MF	20% 50V	
C031	1-101-004-00	CERAMIC	0.01MF	50V	
C032	1-102-816-00	CERAMIC	120PF	5% 50V	
C033	1-101-004-00	CERAMIC	0.01MF	50V	
C034	1-101-004-00	CERAMIC	0.01MF	50V	
C035	1-102-816-00	CERAMIC	120PF	5% 50V	
C036	1-101-882-00	CERAMIC	51PF	5% 50V	
C037	1-101-004-00	CERAMIC	0.01MF	50V	
C038	1-101-004-00	CERAMIC	0.01MF	50V	
C039	1-101-004-00	CERAMIC	0.01MF	50V	
C040	1-101-004-00	CERAMIC	0.01MF	50V	
C041	1-161-043-00	CERAMIC	0.0022MF	10% 25V	
C042	1-102-516-00	CERAMIC	27PF	5% 50V	
C043	1-101-004-00	CERAMIC	0.01MF	50V	
C044	1-101-004-00	CERAMIC	0.01MF	50V	
C045	1-102-523-00	CERAMIC	56PF	5% 50V	
C046	1-101-004-00	CERAMIC	0.01MF	50V	
C047	1-101-004-00	CERAMIC	0.01MF	50V	
C048	1-101-004-00	CERAMIC	0.01MF	50V	
C049	1-101-004-00	CERAMIC	0.01MF	50V	
C050	1-102-865-00	CERAMIC	8PF	0.5PF 50V	

When indicating parts by reference number, please include the board name.

Ref.No	Part No.	Description			Remark
C051	1-102-525-00	CERAMIC	68PF	5% 50V	
C052	1-102-525-00	CERAMIC	68PF	5% 50V	
C053	1-123-379-00	ELECT	0.47MF	20% 50V	
C054	1-161-040-00	CERAMIC	0.0012MF	10% 25V	
C055	1-123-380-00	ELECT	1MF	20% 50V	
C056	1-102-962-00	CERAMIC	30PF	5% 50V	
C057	1-102-981-00	CERAMIC	300PF	5% 50V	
C058	1-123-306-00	ELECT	47MF	20% 10V	
C059	1-101-004-00	CERAMIC	0.01MF	50V	
C060	1-108-579-00	MYLAR	0.01MF	5% 50V	
C061	1-123-382-00	ELECT	3.3MF	20% 50V	
C062	1-123-306-00	ELECT	47MF	20% 10V	
C063	1-101-004-00	CERAMIC	0.01MF	50V	
C064	1-102-521-00	CERAMIC	43PF	5% 50V	
C065	1-102-971-00	CERAMIC	82PF	5% 50V	
C066	1-102-518-00	CERAMIC	33PF	5% 50V	
C067	1-161-025-00	CERAMIC	0.1MF	10% 25V	
C068	1-101-004-00	CERAMIC	0.01MF	50V	
C069	1-102-962-00	CERAMIC	30PF	5% 50V	
C070	1-101-004-00	CERAMIC	0.01MF	50V	
C071	1-123-380-00	ELECT	1MF	20% 50V	
C072	1-101-004-00	CERAMIC	0.01MF	50V	
C073	1-102-525-00	CERAMIC	68PF	5% 50V	
C074	1-102-525-00	CERAMIC	68PF	5% 50V	
C075	1-101-004-00	CERAMIC	0.01MF	50V	
C076	1-102-951-00	CERAMIC	15PF	5% 50V	
C077	1-123-330-00	ELECT	22MF	20% 16V	
C078	1-123-330-00	ELECT	22MF	20% 16V	
C080	1-101-004-00	CERAMIC	0.01MF	50V	
C082	1-161-024-00	CERAMIC	0.082MF	10% 25V	
C083	1-102-977-00	CERAMIC	200PF	5% 50V	
C084	1-123-369-00	ELECT	4.7MF	20% 25V	
C085	1-101-004-00	CERAMIC	0.01MF	50V	
C086	1-108-557-00	MYLAR	0.0012MF	5% 50V	
C087	1-161-057-00	CERAMIC	0.033MF	10% 25V	
C088	1-101-361-00	CERAMIC	150PF	5% 50V	
C092	1-101-004-00	CERAMIC	0.01MF	50V	
C093	1-101-006-00	CERAMIC	0.047MF	50V	
C095	1-102-976-00	CERAMIC	180PF	5% 50V	
C096	1-102-824-00	CERAMIC	470PF	5% 50V	
C097	1-102-823-00	CERAMIC	430PF	5% 50V	
C098	1-102-820-00	CERAMIC	330PF	5% 50V	
C099	1-102-851-00	CERAMIC	15PF	5% 50V	
C100	1-161-025-00	CERAMIC	0.1MF	10% 25V	
C101	1-108-595-00	MYLAR	0.047MF	5% 50V	
C102	1-161-043-00	CERAMIC	0.0022MF	10% 25V	
C103	1-106-172-00	MYLAR	0.001MF	5% 50V	
C104	1-102-977-00	CERAMIC	200PF	5% 50V	
C105	1-102-973-00	CERAMIC	100PF	5% 50V	
C106	1-123-356-00	ELECT	10MF	20% 16V	
C107	1-161-025-00	CERAMIC	0.1MF	10% 25V	
C108	1-101-004-00	CERAMIC	0.01MF	50V	
C109	1-101-004-00	CERAMIC	0.01MF	50V	

YC-28

Ref.No	Part No.	Description			Remark
C111	1-101-882-00	CERAMIC	51PF	5%	50V
C112	1-101-004-00	CERAMIC	0.01MF		50V
C113	1-101-006-00	CERAMIC	0.047MF		50V
C114	1-101-880-00	CERAMIC	47PF	5%	50V
C116	1-101-004-00	CERAMIC	0.01MF		50V
C117	1-101-361-00	CERAMIC	150PF	5%	50V
C118	1-101-004-00	CERAMIC	0.01MF		50V
C119	1-123-306-00	ELECT	47MF	20%	10V
C120	1-101-004-00	CERAMIC	0.01MF		50V
C121	1-101-004-00	CERAMIC	0.01MF		50V
C122	1-101-004-00	CERAMIC	0.01MF		50V
C123	1-101-004-00	CERAMIC	0.01MF		50V
C124	1-102-948-00	CERAMIC	11PF	5%	50V
C125	1-123-330-00	ELECT	22MF	20%	16V
C127	1-123-318-00	ELECT	33MF	20%	16V
C128	1-123-330-00	ELECT	22MF	20%	16V
C129	1-123-330-00	ELECT	22MF	20%	16V
C130	1-123-356-00	ELECT	10MF	20%	16V
C131	1-123-380-00	ELECT	1MF	20%	50V
C132	1-123-369-00	ELECT	4.7MF	20%	25V
C133	1-102-851-00	CERAMIC	15PF	5%	50V
C134	1-102-821-00	CERAMIC	360PF	5%	50V
C135	1-102-823-00	CERAMIC	430PF	5%	50V
C136	1-102-976-00	CERAMIC	180PF	5%	50V
C137	1-102-513-00	CERAMIC	18PF	5%	50V
C138	1-102-529-00	CERAMIC	100PF	5%	50V
C139	1-102-529-00	CERAMIC	100PF	5%	50V
C140	1-102-519-00	CERAMIC	36PF	5%	50V
C141	1-102-529-00	CERAMIC	100PF	5%	50V
C142	1-123-369-00	ELECT	4.7MF	20%	25V
C144	1-102-511-00	CERAMIC	13PF	5%	50V
C145	1-102-522-00	CERAMIC	51PF	5%	50V
C146	1-102-522-00	CERAMIC	51PF	5%	50V
C147	1-102-511-00	CERAMIC	13PF	5%	50V
C148	1-101-006-00	CERAMIC	0.047MF		50V
C155	1-101-004-00	CERAMIC	0.01MF		50V
C156	1-101-004-00	CERAMIC	0.01MF		50V
C157	1-102-981-00	CERAMIC	300PF	5%	50V
C158	1-102-948-00	CERAMIC	11PF	5%	50V
C159	1-102-822-00	CERAMIC	390PF	5%	50V
C178	1-123-330-00	ELECT	22MF	20%	16V
C179	1-123-356-00	ELECT	10MF	20%	16V
C180	1-123-332-00	ELECT	47MF	20%	16V
C181	1-106-186-00	MYLAR	0.0039MF	5%	50V
C182	1-123-380-00	ELECT	1MF	20%	50V
C183	1-101-006-00	CERAMIC	0.047MF		50V
C184	1-123-332-00	ELECT	47MF	20%	16V
C185	1-123-333-00	ELECT	100MF	20%	16V
C186	1-101-004-00	CERAMIC	0.01MF		50V
C187	1-123-330-00	ELECT	22MF	20%	16V
C188	1-161-025-00	CERAMIC	0.1MF	10%	25V
C189	1-123-356-00	ELECT	10MF	20%	16V
C190	1-123-311-00	ELECT	1000MF	20%	10V
C191	1-101-004-00	CERAMIC	0.01MF		50V
C192	1-123-369-00	ELECT	4.7MF	20%	25V
C196	1-123-380-00	ELECT	1MF	20%	50V
C197	1-123-356-00	ELECT	10MF	20%	16V

Ref.No	Part No.	Description			Remark
C198	1-102-980-00	CERAMIC	270PF	5%	50V
C200	1-101-004-00	CERAMIC	0.01MF		50V
C201	1-123-356-00	ELECT	10MF	20%	16V
C202	1-101-004-00	CERAMIC	0.01MF		50V
C203	1-101-004-00	CERAMIC	0.01MF		50V
C204	1-123-369-00	ELECT	4.7MF	20%	25V
C206	1-101-004-00	CERAMIC	0.01MF		50V
C207	1-161-025-00	CERAMIC	0.1MF	10%	25V
C208	1-123-356-00	ELECT	10MF	20%	16V
C211	1-123-356-00	ELECT	10MF	20%	16V
C212	1-123-333-00	ELECT	100MF	20%	16V
C214	1-123-356-00	ELECT	10MF	20%	16V
C215	1-123-330-00	ELECT	22MF	20%	16V
C217	1-161-025-00	CERAMIC	0.1MF	10%	25V
C219	1-123-356-00	ELECT	10MF	20%	16V
C220	1-161-059-00	CERAMIC	0.047MF	10%	25V
C225	1-101-004-00	CERAMIC	0.01MF		50V
C230	1-124-475-11	ELECT	470MF	20%	16V
C241	1-161-025-00	CERAMIC	0.1MF	10%	25V
C243	1-161-025-00	CERAMIC	0.1MF	10%	25V
C246	1-161-025-00	CERAMIC	0.1MF	10%	25V
C247	1-123-333-00	ELECT	100MF	20%	16V
C248	1-161-059-00	CERAMIC	0.047MF	10%	25V
C251	1-161-059-00	CERAMIC	0.047MF	10%	25V
C252	1-101-081-00	CERAMIC	130PF	5%	50V
C253	1-123-356-00	ELECT	10MF	20%	16V
C257	1-161-059-00	CERAMIC	0.047MF	10%	25V
C258	1-161-059-00	CERAMIC	0.047MF	10%	25V
C270	1-161-059-00	CERAMIC	0.047MF	10%	25V
C274	1-102-518-00	CERAMIC	33P	5%	50V
C401	1-123-381-00	ELECT	2.2MF	20%	50V
C402	1-101-001-00	CERAMIC	0.001MF		50V
C403	1-101-001-00	CERAMIC	0.001MF		50V
C404	1-101-004-00	CERAMIC	0.01MF		50V
C405	1-123-330-00	ELECT	22MF	20%	16V
C406	1-123-330-00	ELECT	22MF	20%	16V
C407	1-102-962-00	CERAMIC	30PF	5%	50V
C408	1-101-888-00	CERAMIC	68PF	5%	50V
C409	1-123-381-00	ELECT	2.2MF	20%	50V
C410	1-102-936-00	CERAMIC	3PF	0.25PF	50V
C411	1-101-005-00	CERAMIC	0.022MF		50V
C412	1-123-318-00	ELECT	33MF	20%	16V
C414	1-123-318-00	ELECT	33MF	20%	16V
C415	1-123-356-00	ELECT	10MF	20%	16V
C416	1-102-948-00	CERAMIC	11PF	5%	50V
C417	1-102-948-00	CERAMIC	11PF	5%	50V
C418	1-102-965-00	CERAMIC	39PF	5%	50V
C419	1-123-356-00	ELECT	10MF	20%	16V
C420	1-123-369-00	ELECT	4.7MF	20%	25V
C421	1-101-006-00	CERAMIC	0.047MF		50V
C501	1-101-004-00	CERAMIC	0.01MF		50V
C502	1-101-004-00	CERAMIC	0.01MF		50V
C503	1-101-004-00	CERAMIC	0.01MF		50V
C504	1-101-005-00	CERAMIC	0.022MF		50V
C505	1-102-822-00	CERAMIC	390PF	5%	50V
C506	1-101-006-00	CERAMIC	0.047MF		50V
C507	1-123-318-00	ELECT	33MF	20%	16V

When indicating parts by reference number, please include the board name.

Ref.No	Part No.	Description	Remark
		FILTER	
CF001	1-527-998-00	FILTER, CERAMIC	
CF002	1-527-875-00	FILTER, CERAMIC	
CF003	1-527-849-00	FILTER, CERAMIC	
		CONNECTOR	
CN001	1-564-035-11	PIN, CONNECTOR 10P	
CN003	1-560-891-00	PIN, CONNECTOR 3P	
CN004	1-560-895-00	PIN, CONNECTOR 7P	
CN005	1-560-893-00	PIN, CONNECTOR 5P	
CN006	1-560-893-00	PIN, CONNECTOR 5P	
CN007	1-560-898-00	PIN, CONNECTOR 10P	
CN008	1-560-895-00	PIN, CONNECTOR 7P	
CN009	1-507-840-00	JACK, MINIATURE	
CN010	1-562-121-00	CONNECTOR, DIN 6P	
		TRIMMER	
CV001	1-141-275-00	CAP, TRIMMER	
		DIODE	
D001	=>8-719-911-19	DIODE 1SS119	
D002	=>8-719-911-19	DIODE 1SS119	
D005	=>8-719-911-19	DIODE 1SS119	
D006	8-719-000-06	DIODE MC921	
D009	8-719-000-06	DIODE MC921	
D011	=>8-719-911-19	DIODE 1SS119	
D012	=>8-719-911-19	DIODE 1SS119	
D013	=>8-719-911-19	DIODE 1SS119	
D014	=>8-719-911-19	DIODE 1SS119	
D015	=>8-719-911-19	DIODE 1SS119	
D016	8-719-000-12	DIODE MC931	
D017	=>8-719-911-19	DIODE 1SS119	
D018	=>8-719-911-19	DIODE 1SS119	
D019	=>8-719-911-19	DIODE 1SS119	
D020	=>8-719-911-19	DIODE 1SS119	
D021	=>8-719-911-19	DIODE 1SS119	
D022	=>8-719-911-19	DIODE 1SS119	
D023	=>8-719-911-19	DIODE 1SS119	
D025	=>8-719-911-19	DIODE 1SS119	
D027	8-719-000-06	DIODE MC921	
D029	8-719-100-56	DIODE RD10E-B1	
D030	=>8-719-911-19	DIODE 1SS119	
D031	=>8-719-911-19	DIODE 1SS119	
D033	=>8-719-911-19	DIODE 1SS119	
D036	=>8-719-911-19	DIODE 1SS119	
		DELAY LINE	
DL001	1-415-313-00	DELAY LINE (1H)	
DL401	1-415-352-11	DELAY LINE, 1H	
DL501	1-415-282-00	DELAY LINE	

Ref.No	Part No.	Description	Remark
		IC	
IC001	8-759-909-20	IC BA634	
IC002	8-759-904-95	IC BA7007	
IC003	8-759-201-68	IC CX10023	
IC004	8-759-208-94	IC CX894	
IC005	8-752-006-10	IC CX20061	
IC006	8-759-202-00	IC CX10021A-NP	
IC009	8-759-101-62	IC CX20043	
IC011	8-752-006-10	IC CX20061	
IC012	8-759-979-26	IC CX7926	
IC401	=>8-758-662-00	IC CX866B	
		COIL	
L001	1-407-499-00	MICRO INDUCTOR 3.9MMH	
L002	1-407-496-00	MICRO INDUCTOR 2.2MMH	
L003	1-408-408-00	MICRO INDUCTOR 8.2UH	
L004	1-408-406-00	MICRO INDUCTOR 5.6UH	
L005	1-408-415-00	MICRO INDUCTOR 33UH	
L006	1-408-428-00	MICRO INDUCTOR 390UH	
L007	1-408-427-00	MICRO INDUCTOR 330UH	
L008	1-408-421-00	MICRO INDUCTOR 100UH	
L010	1-408-427-00	MICRO INDUCTOR 330UH	
L011	1-408-423-00	MICRO INDUCTOR 150UH	
L012	1-408-409-00	MICRO INDUCTOR 10UH	
L014	1-408-422-00	MICRO INDUCTOR 120UH	
L015	1-408-419-00	MICRO INDUCTOR 68UH	
L016	1-408-413-00	MICRO INDUCTOR 22UH	
L017	1-408-423-00	MICRO INDUCTOR 150UH	
L018	1-408-419-00	MICRO INDUCTOR 68UH	
L019	1-408-416-00	MICRO INDUCTOR 39UH	
L020	1-408-416-00	MICRO INDUCTOR 39UH	
L021	1-408-422-00	MICRO INDUCTOR 120UH	
L022	1-408-424-00	MICRO INDUCTOR 180UH	
L023	1-408-422-00	MICRO INDUCTOR 120UH	
L026	1-408-416-00	MICRO INDUCTOR 39UH	
L036	1-408-429-00	MICRO INDUCTOR 470UH	
L040	1-408-575-00	MICRO INDUCTOR 100UH	
L041	1-408-424-00	MICRO INDUCTOR 180UH	
L042	1-407-163-XX	MICRO INDUCTOR 33UH	
L401	1-408-397-00	MICRO INDUCTOR 1UH	
L402	1-408-397-00	MICRO INDUCTOR 1UH	
L501	1-408-408-00	MICRO INDUCTOR 8.2UH	
L502	1-408-423-00	MICRO INDUCTOR 150UH	
		FILTER LOW PASS	
LPF001	1-235-097-00	FILTER, LOW PASS	
		VARIABLE COIL	
LV001	1-407-291-00	MICRO INDUCTOR 15MMH	
LV002	1-407-573-00	COIL, VARIABLE 47UH	
LV003	1-407-571-00	COIL, VARIABLE 22UH	
LV501	1-407-569-00	COIL, VARIABLE 10UH	
		IC LINK	
PS001	1-532-685-11	LINK, IC (ICP-N20)	

The components identified by shading and mark ⚠ are critical for safety. Replace only with part number specified.

When indicating parts by reference number, please include the board name.

YC-28

Ref.No	Part No.	Description	Remark
		TRANSISTOR	
Q001	8-729-900-36	TRANSISTOR DTC124ES	
Q002	=>8-729-245-83	TRANSISTOR 2SC2458	
Q003	8-729-600-12	TRANSISTOR 2SK108	
Q004	=>8-729-245-83	TRANSISTOR 2SC2458	
Q005	8-729-600-12	TRANSISTOR 2SK108	
Q007	=>8-729-245-83	TRANSISTOR 2SC2458	
Q010	8-729-177-32	TRANSISTOR 2SD773	
Q011	=>8-729-204-83	TRANSISTOR 2SA1048-GR	
Q014	8-729-113-33	TRANSISTOR 2SB733-4	
Q015	8-729-900-80	TRANSISTOR DTC114ES	
Q016	=>8-729-245-83	TRANSISTOR 2SC2458	
Q019	=>8-729-204-83	TRANSISTOR 2SA1048-GR	
Q020	=>8-729-204-83	TRANSISTOR 2SA1048-GR	
Q021	=>8-729-245-83	TRANSISTOR 2SC2458	
Q022	=>8-729-245-83	TRANSISTOR 2SC2458	
Q023	=>8-729-245-83	TRANSISTOR 2SC2458	
Q024	=>8-729-204-83	TRANSISTOR 2SA1048-GR	
Q025	=>8-729-245-83	TRANSISTOR 2SC2458	
Q026	=>8-729-204-83	TRANSISTOR 2SA1048-GR	
Q027	=>8-729-204-83	TRANSISTOR 2SA1048-GR	
Q028	=>8-729-245-83	TRANSISTOR 2SC2458	
Q029	=>8-729-245-83	TRANSISTOR 2SC2458	
Q030	=>8-729-245-83	TRANSISTOR 2SC2458	
Q031	=>8-729-245-83	TRANSISTOR 2SC2458	
Q032	=>8-729-245-83	TRANSISTOR 2SC2458	
Q033	=>8-729-245-83	TRANSISTOR 2SC2458	
Q034	=>8-729-245-83	TRANSISTOR 2SC2458	
Q035	8-729-603-30	TRANSISTOR 2SC403SP-3	
Q036	8-729-603-30	TRANSISTOR 2SC403SP-3	
Q037	8-729-384-46	TRANSISTOR 2SA844-C	
Q038	8-729-384-46	TRANSISTOR 2SA844-C	
Q039	8-729-603-30	TRANSISTOR 2SC403SP-3	
Q040	8-729-603-30	TRANSISTOR 2SC403SP-3	
Q041	8-729-384-46	TRANSISTOR 2SA844-C	
Q042	8-729-603-30	TRANSISTOR 2SC403SP-3	
Q043	8-729-603-30	TRANSISTOR 2SC403SP-3	
Q044	8-729-603-30	TRANSISTOR 2SC403SP-3	
Q045	8-729-384-46	TRANSISTOR 2SA844-C	
Q047	8-729-603-30	TRANSISTOR 2SC403SP-3	
Q048	8-729-603-30	TRANSISTOR 2SC403SP-3	
Q049	8-729-603-30	TRANSISTOR 2SC403SP-3	
Q050	8-729-603-30	TRANSISTOR 2SC403SP-3	
Q051	8-729-384-46	TRANSISTOR 2SA844-C	
Q052	8-729-603-30	TRANSISTOR 2SC403SP-3	
Q053	8-729-384-46	TRANSISTOR 2SA844-C	
Q054	8-729-384-46	TRANSISTOR 2SA844-C	
Q055	8-729-384-46	TRANSISTOR 2SA844-C	
Q056	8-729-603-30	TRANSISTOR 2SC403SP-3	
Q060	=>8-729-204-83	TRANSISTOR 2SA1048-GR	
Q061	=>8-729-245-83	TRANSISTOR 2SC2458	
Q062	=>8-729-204-83	TRANSISTOR 2SA1048-GR	
Q063	=>8-729-245-83	TRANSISTOR 2SC2458	
Q064	=>8-729-245-83	TRANSISTOR 2SC2458	
Q065	=>8-729-245-83	TRANSISTOR 2SC2458	
Q066	⚠ 8-729-117-54	TRANSISTOR 2SA1175	
Q067	=>8-729-245-83	TRANSISTOR 2SC2458	
Q068	=>8-729-245-83	TRANSISTOR 2SC2458	
Q069	=>8-729-204-83	TRANSISTOR 2SA1048-GR	
Q070	8-729-603-30	TRANSISTOR 2SC403SP-3	
Q071	=>8-729-245-83	TRANSISTOR 2SC2458	
Q072	=>8-729-245-83	TRANSISTOR 2SC2458	
Q074	=>8-729-245-83	TRANSISTOR 2SC2458	
Q075	8-729-900-85	TRANSISTOR DTC144WS	
Q100	8-729-900-85	TRANSISTOR DTC144WS	
Q101	8-729-900-89	TRANSISTOR DTC144ES	
Q102	8-729-900-65	TRANSISTOR DTA144ES	
Q103	=>8-729-245-83	TRANSISTOR 2SC2458	
Q401	=>8-729-245-83	TRANSISTOR 2SC2458	
Q501	=>8-729-245-83	TRANSISTOR 2SC2458	
Q502	=>8-729-245-83	TRANSISTOR 2SC2458	
Q503	=>8-729-245-83	TRANSISTOR 2SC2458	
Q504	=>8-729-245-83	TRANSISTOR 2SC2458	

Ref.No	Part No.	Description				Remark
		RESISTOR				
R001	1-247-838-00	CARBON	2K	5%	1/6W	
R003	1-247-831-00	CARBON	1K	5%	1/6W	
R005	1-247-827-00	CARBON	680	5%	1/6W	
R006	1-247-879-00	CARBON	100K	5%	1/6W	
R007	1-247-871-00	CARBON	47K	5%	1/6W	
R008	1-247-879-00	CARBON	100K	5%	1/6W	
R009	1-247-879-00	CARBON	100K	5%	1/6W	
R010	1-247-814-00	CARBON	200	5%	1/6W	
R011	1-247-871-00	CARBON	47K	5%	1/6W	
R012	1-247-827-00	CARBON	680	5%	1/6W	
R013	1-247-879-00	CARBON	100K	5%	1/6W	
R014	1-247-871-00	CARBON	47K	5%	1/6W	
R015	1-247-879-00	CARBON	100K	5%	1/6W	
R016	1-247-879-00	CARBON	100K	5%	1/6W	
R017	1-247-814-00	CARBON	200	5%	1/6W	
R018	1-247-871-00	CARBON	47K	5%	1/6W	
R022	1-247-847-00	CARBON	4.7K	5%	1/6W	
R026	1-247-867-00	CARBON	33K	5%	1/6W	
R027	1-247-867-00	CARBON	33K	5%	1/6W	
R028	1-247-877-00	CARBON	82K	5%	1/6W	
R031	⚠ 1-212-857-00	FUSIBLE	10	5%	1/4W	F
R032	1-247-831-00	CARBON	1K	5%	1/6W	
R035	1-247-859-00	CARBON	15K	5%	1/6W	
R037	1-247-869-00	CARBON	39K	5%	1/6W	
R038	1-247-837-00	CARBON	1.8K	5%	1/6W	
R039	⚠ 1-212-857-00	FUSIBLE	10	5%	1/4W	F
R040	⚠ 1-212-849-00	FUSIBLE	4.7	5%	1/4W	F
R041	1-247-838-00	CARBON	2K	5%	1/6W	

The components identified by shading and mark ⚠ are critical for safety. Replace only with part number specified.

When indicating parts by reference number, please include the board name.

Ref.No	Part No.	Description				Remark
R046	1-247-835-00	CARBON	1.5K	5%	1/6W	
R047	1-247-879-00	CARBON	100K	5%	1/6W	
R048	1-247-831-00	CARBON	1K	5%	1/6W	
R049	1-247-863-00	CARBON	22K	5%	1/6W	
R050	1-247-853-00	CARBON	8.2K	5%	1/6W	
R051	1-247-821-00	CARBON	390	5%	1/6W	
R052	1-247-819-00	CARBON	330	5%	1/6W	
R053	1-247-843-00	CARBON	3.3K	5%	1/6W	
R054	1-247-847-00	CARBON	4.7K	5%	1/6W	
R055	1-247-849-00	CARBON	5.6K	5%	1/6W	
R056	1-247-867-00	CARBON	33K	5%	1/6W	
R058	1-247-855-00	CARBON	10K	5%	1/6W	
R059	1-247-859-00	CARBON	15K	5%	1/6W	
R060	1-247-867-00	CARBON	33K	5%	1/6W	
R061	1-247-855-00	CARBON	10K	5%	1/6W	
R062	1-247-855-00	CARBON	10K	5%	1/6W	
R063	1-247-841-00	CARBON	2.7K	5%	1/6W	
R064	1-247-848-00	CARBON	5.1K	5%	1/6W	
R065	1-247-889-00	CARBON	270K	5%	1/6W	
R066	1-247-870-00	CARBON	43K	5%	1/6W	
R067	1-247-862-00	CARBON	20K	5%	1/6W	
R068	1-247-838-00	CARBON	2K	5%	1/6W	
R069	1-247-831-00	CARBON	1K	5%	1/6W	
R070	1-247-831-00	CARBON	1K	5%	1/6W	
R071	1-247-855-00	CARBON	10K	5%	1/6W	
R072	1-247-841-00	CARBON	2.7K	5%	1/6W	
R073	1-247-831-00	CARBON	1K	5%	1/6W	
R074	1-247-831-00	CARBON	1K	5%	1/6W	
R075	1-247-815-00	CARBON	220	5%	1/6W	
R076	1-247-855-00	CARBON	10K	5%	1/6W	
R077	1-247-855-00	CARBON	10K	5%	1/6W	
R078	1-247-867-00	CARBON	33K	5%	1/6W	
R079	1-247-855-00	CARBON	10K	5%	1/6W	
R080	1-247-853-00	CARBON	8.2K	5%	1/6W	
R081	1-247-843-00	CARBON	3.3K	5%	1/6W	
R082	1-247-871-00	CARBON	47K	5%	1/6W	
R083	1-247-825-00	CARBON	560	5%	1/6W	
R084	1-247-831-00	CARBON	1K	5%	1/6W	
R085	1-247-803-00	CARBON	68	5%	1/6W	
R086	1-247-825-00	CARBON	560	5%	1/6W	
R087	1-247-825-00	CARBON	560	5%	1/6W	
R088	1-247-801-00	CARBON	56	5%	1/6W	
R091	1-247-824-00	CARBON	510	5%	1/6W	
R092	1-247-791-00	CARBON	22	5%	1/6W	
R093	1-247-806-00	CARBON	91	5%	1/6W	
R094	1-247-869-00	CARBON	39K	5%	1/6W	
R095	1-247-872-00	CARBON	51K	5%	1/6W	
R096	1-247-879-00	CARBON	100K	5%	1/6W	
R097	1-247-882-00	CARBON	130K	5%	1/6W	
R098	1-247-890-00	CARBON	300K	5%	1/6W	
R100	1-247-869-00	CARBON	39K	5%	1/6W	
R101	1-247-864-00	CARBON	24K	5%	1/6W	
R103	1-247-831-00	CARBON	1K	5%	1/6W	

Ref.No	Part No.	Description				Remark
R104	1-247-839-00	CARBON	2.2K	5%	1/6W	
R105	1-247-829-00	CARBON	820	5%	1/6W	
R106	1-247-831-00	CARBON	1K	5%	1/6W	
R107	1-247-824-00	CARBON	510	5%	1/6W	
R108	1-247-843-00	CARBON	3.3K	5%	1/6W	
R109	1-247-867-00	CARBON	33K	5%	1/6W	
R111	1-247-846-00	CARBON	4.3K	5%	1/6W	
R112	1-247-854-00	CARBON	9.1K	5%	1/6W	
R113	1-247-843-00	CARBON	3.3K	5%	1/6W	
R114	1-247-828-00	CARBON	750	5%	1/6W	
R115	1-247-879-00	CARBON	100K	5%	1/6W	
R116	1-247-853-00	CARBON	8.2K	5%	1/6W	
R117	1-247-846-00	CARBON	4.3K	5%	1/6W	
R118	1-247-867-00	CARBON	33K	5%	1/6W	
R119	1-247-855-00	CARBON	10K	5%	1/6W	
R120	1-247-831-00	CARBON	1K	5%	1/6W	
R121	1-247-831-00	CARBON	1K	5%	1/6W	
R122	1-247-839-00	CARBON	2.2K	5%	1/6W	
R123	1-247-841-00	CARBON	2.7K	5%	1/6W	
R124	1-247-819-00	CARBON	330	5%	1/6W	
R125	1-247-831-00	CARBON	1K	5%	1/6W	
R126	1-247-831-00	CARBON	1K	5%	1/6W	
R127	1-247-835-00	CARBON	1.5K	5%	1/6W	
R128	1-247-831-00	CARBON	1K	5%	1/6W	
R129	1-247-867-00	CARBON	33K	5%	1/6W	
R130	1-247-842-00	CARBON	3K	5%	1/6W	
R131	1-247-841-00	CARBON	2.7K	5%	1/6W	
R132	1-247-887-00	CARBON	220K	5%	1/6W	
R133	1-247-807-00	CARBON	100	5%	1/6W	
R134	1-247-851-00	CARBON	6.8K	5%	1/6W	
R135	1-247-883-00	CARBON	150K	5%	1/6W	
R136	1-247-879-00	CARBON	100K	5%	1/6W	
R137	1-247-857-00	CARBON	12K	5%	1/6W	
R138	1-247-861-00	CARBON	18K	5%	1/6W	
R139	1-247-841-00	CARBON	2.7K	5%	1/6W	
R140	1-247-867-00	CARBON	33K	5%	1/6W	
R141	1-247-831-00	CARBON	1K	5%	1/6W	
R142	1-247-842-00	CARBON	3K	5%	1/6W	
R143	1-247-855-00	CARBON	10K	5%	1/6W	
R144	1-247-824-00	CARBON	510	5%	1/6W	
R145	1-247-838-00	CARBON	2K	5%	1/6W	
R146	1-247-829-00	CARBON	820	5%	1/6W	
R147	1-247-855-00	CARBON	10K	5%	1/6W	
R148	1-247-831-00	CARBON	1K	5%	1/6W	
R149	1-247-819-00	CARBON	330	5%	1/6W	
R150	1-247-863-00	CARBON	22K	5%	1/6W	
R151	1-247-812-00	CARBON	160	5%	1/6W	
R152	1-247-829-00	CARBON	820	5%	1/6W	
R153	1-247-863-00	CARBON	22K	5%	1/6W	
R154	1-247-821-00	CARBON	390	5%	1/6W	
R155	1-247-839-00	CARBON	2.2K	5%	1/6W	
R156	1-247-839-00	CARBON	2.2K	5%	1/6W	
R157	1-247-837-00	CARBON	1.8K	5%	1/6W	

When indicating parts by reference number, please include the board name.

YC-28

Ref.No	Part No.	Description				Remark
R158	1-247-817-00	CARBON	270	5%	1/6W	
R159	1-247-810-00	CARBON	130	5%	1/6W	
R160	1-247-832-00	CARBON	1.1K	5%	1/6W	
R161	1-247-855-00	CARBON	10K	5%	1/6W	
R162	1-247-835-00	CARBON	1.5K	5%	1/6W	
R163	1-247-842-00	CARBON	3K	5%	1/6W	
R164	1-247-830-00	CARBON	910	5%	1/6W	
R165	1-247-834-00	CARBON	1.3K	5%	1/6W	
R166	1-247-818-00	CARBON	300	5%	1/6W	
R167	1-247-849-00	CARBON	5.6K	5%	1/6W	
R168	1-247-836-00	CARBON	1.6K	5%	1/6W	
R169	1-247-840-00	CARBON	2.4K	5%	1/6W	
R170	1-247-804-00	CARBON	75	5%	1/6W	
R171	1-247-901-00	CARBON	820K	5%	1/6W	
R172	1-247-857-00	CARBON	12K	5%	1/6W	
R173	1-247-861-00	CARBON	18K	5%	1/6W	
R174	1-247-839-00	CARBON	2.2K	5%	1/6W	
R175	1-247-831-00	CARBON	1K	5%	1/6W	
R176	1-247-839-00	CARBON	2.2K	5%	1/6W	
R178	1-247-839-00	CARBON	2.2K	5%	1/6W	
R179	1-247-843-00	CARBON	3.3K	5%	1/6W	
R180	1-247-835-00	CARBON	1.5K	5%	1/6W	
R181	1-247-835-00	CARBON	1.5K	5%	1/6W	
R185	1-247-843-00	CARBON	3.3K	5%	1/6W	
R186	1-247-830-00	CARBON	910	5%	1/6W	
R187	1-247-831-00	CARBON	1K	5%	1/6W	
R188	1-247-839-00	CARBON	2.2K	5%	1/6W	
R189	1-247-834-00	CARBON	1.3K	5%	1/6W	
R190	1-247-834-00	CARBON	1.3K	5%	1/6W	
R191	1-247-831-00	CARBON	1K	5%	1/6W	
R192	1-247-831-00	CARBON	1K	5%	1/6W	
R193	1-247-855-00	CARBON	10K	5%	1/6W	
R194	1-247-819-00	CARBON	330	5%	1/6W	
R195	1-247-812-00	CARBON	160	5%	1/6W	
R196	1-247-863-00	CARBON	22K	5%	1/6W	
R197	1-247-863-00	CARBON	22K	5%	1/6W	
R198	1-247-829-00	CARBON	820	5%	1/6W	
R199	1-247-821-00	CARBON	390	5%	1/6W	
R200	1-247-839-00	CARBON	2.2K	5%	1/6W	
R201	1-247-837-00	CARBON	1.8K	5%	1/6W	
R202	1-247-831-00	CARBON	1K	5%	1/6W	
R203	1-247-815-00	CARBON	220	5%	1/6W	
R204	1-247-811-00	CARBON	150	5%	1/6W	
R205	1-247-811-00	CARBON	150	5%	1/6W	
R206	1-247-834-00	CARBON	1.3K	5%	1/6W	
R207	1-247-874-00	CARBON	62K	5%	1/6W	
R208	1-247-874-00	CARBON	62K	5%	1/6W	
R209	1-247-833-00	CARBON	1.2K	5%	1/6W	
R210	1-247-824-00	CARBON	510	5%	1/6W	
R211	1-247-831-00	CARBON	1K	5%	1/6W	
R212	1-247-824-00	CARBON	510	5%	1/6W	
R213	1-247-829-00	CARBON	820	5%	1/6W	
R214	1-247-831-00	CARBON	1K	5%	1/6W	

Ref.No	Part No.	Description				Remark
R215	1-247-831-00	CARBON	1K	5%	1/6W	
R216	1-247-832-00	CARBON	1.1K	5%	1/6W	
R217	1-247-831-00	CARBON	1K	5%	1/6W	
R218	1-247-831-00	CARBON	1K	5%	1/6W	
R219	1-247-866-00	CARBON	30K	5%	1/6W	
R220	1-247-874-00	CARBON	62K	5%	1/6W	
R221	1-247-849-00	CARBON	5.6K	5%	1/6W	
R222	1-247-837-00	CARBON	1.8K	5%	1/6W	
R223	1-247-837-00	CARBON	1.8K	5%	1/6W	
R231	1-247-867-00	CARBON	33K	5%	1/6W	
R235	1-247-831-00	CARBON	1K	5%	1/6W	
R236	1-247-853-00	CARBON	8.2K	5%	1/6W	
R238	1-247-858-00	CARBON	13K	5%	1/6W	
R239	1-247-855-00	CARBON	10K	5%	1/6W	
R240	1-247-839-00	CARBON	2.2K	5%	1/6W	
R241	1-247-804-00	CARBON	75	5%	1/6W	
R242	1-247-879-00	CARBON	100K	5%	1/6W	
R243	1-247-855-00	CARBON	10K	5%	1/6W	
R244	1-247-851-00	CARBON	6.8K	5%	1/6W	
R245	1-247-879-00	CARBON	100K	5%	1/6W	
R246	1-247-871-00	CARBON	47K	5%	1/6W	
R247	1-247-871-00	CARBON	47K	5%	1/6W	
R248	1-247-818-00	CARBON	300	5%	1/6W	
R249	1-247-811-00	CARBON	150	5%	1/6W	
R250	1-247-808-00	CARBON	110	5%	1/6W	
R251	1-247-838-00	CARBON	2K	5%	1/6W	
R252	1-247-803-00	CARBON	68	5%	1/6W	
R253	1-247-831-00	CARBON	1K	5%	1/6W	
R254	1-247-855-00	CARBON	10K	5%	1/6W	
R255	1-247-858-00	CARBON	13K	5%	1/6W	
R256	1-247-843-00	CARBON	3.3K	5%	1/6W	
R257	1-247-835-00	CARBON	1.5K	5%	1/6W	
R258	1-247-852-00	CARBON	7.5K	5%	1/6W	
R259	1-247-831-00	CARBON	1K	5%	1/6W	
R260	1-247-841-00	CARBON	2.7K	5%	1/6W	
R261	1-247-863-00	CARBON	22K	5%	1/6W	
R262	1-247-859-00	CARBON	15K	5%	1/6W	
R274	1-247-883-00	CARBON	150K	5%	1/6W	
R275	1-247-871-00	CARBON	47K	5%	1/6W	
R276	1-247-849-00	CARBON	5.6K	5%	1/6W	
R277	1-247-855-00	CARBON	10K	5%	1/6W	
R281	1-247-890-00	CARBON	300K	5%	1/6W	
R282	1-247-819-00	CARBON	330	5%	1/6W	
R283	1-247-838-00	CARBON	2K	5%	1/6W	
R284	1-247-877-00	CARBON	82K	5%	1/6W	
R286	1-247-848-00	CARBON	5.1K	5%	1/6W	
R287	1-247-831-00	CARBON	1K	5%	1/6W	
R288	1-247-803-00	CARBON	68	5%	1/6W	
R291	1-247-863-00	CARBON	22K	5%	1/6W	
R292	1-247-875-00	CARBON	68K	5%	1/6W	
R293	1-247-819-00	CARBON	330	5%	1/6W	
R294	1-247-818-00	CARBON	300	5%	1/6W	

When indicating parts by reference number, please include the board name.

Ref.No	Part No.	Description				Remark
R295	1-247-839-00	CARBON	2.2K	5%	1/6W	
R296	1-247-811-00	CARBON	150	5%	1/6W	
R297	1-247-831-00	CARBON	1K	5%	1/6W	
R298	1-247-894-00	CARBON	430K	5%	1/6W	
R299	1-247-892-00	CARBON	360K	5%	1/6W	
R300	1-247-818-00	CARBON	300	5%	1/6W	
R301	1-247-855-00	CARBON	10K	5%	1/6W	
R302	1-247-819-00	CARBON	330	5%	1/6W	
R303	1-247-819-00	CARBON	330	5%	1/6W	
R304	1-247-847-00	CARBON	4.7K	5%	1/6W	
R305	1-247-835-00	CARBON	1.5K	5%	1/6W	
R312	1-247-847-00	CARBON	4.7K	5%	1/6W	
R313	1-247-823-00	CARBON	470	5%	1/6W	
R314	1-247-871-00	CARBON	47K	5%	1/6W	
R315	1-247-855-00	CARBON	10K	5%	1/6W	
R316	1-247-807-00	CARBON	100	5%	1/6W	
R317	1-247-807-00	CARBON	100	5%	1/6W	
R320	1-247-878-00	CARBON	91K	5%	1/6W	
R321	1-247-887-00	CARBON	220K	5%	1/6W	
R325	1-247-807-00	CARBON	100	5%	1/6W	
R326	1-247-852-00	CARBON	7.5K	5%	1/6W	
R327	1-247-863-00	CARBON	22K	5%	1/6W	
R328	1-247-848-00	CARBON	5.1K	5%	1/6W	
R331	1-247-852-00	CARBON	7.5K	5%	1/6W	
R342	1-247-807-00	CARBON	100	5%	1/6W	
R345	1-247-867-00	CARBON	33K	5%	1/6W	
R346	1-247-847-00	CARBON	4.7K	5%	1/6W	
R351	1-247-815-00	CARBON	220	5%	1/6W	
R352	1-247-855-00	CARBON	10K	5%	1/6W	
R353	1-247-831-00	CARBON	1K	5%	1/6W	
R354	1-247-815-00	CARBON	220	5%	1/6W	
R355	1-247-840-00	CARBON	2.4K	5%	1/6W	
R356	1-247-840-00	CARBON	2.4K	5%	1/6W	
R357	1-247-829-00	CARBON	820	5%	1/6W	
R358	1-247-855-00	CARBON	10K	5%	1/6W	
R359	1-247-839-00	CARBON	2.2K	5%	1/6W	
R370	1-247-790-00	CARBON	20	5%	1/6W	
R401	1-247-810-00	CARBON	130	5%	1/6W	
R402	1-247-808-00	CARBON	110	5%	1/6W	
R403	1-247-867-00	CARBON	33K	5%	1/6W	
R404	1-247-871-00	CARBON	47K	5%	1/6W	
R405	1-247-831-00	CARBON	1K	5%	1/6W	
R406	1-247-832-00	CARBON	1.1K	5%	1/6W	
R407	1-247-832-00	CARBON	1.1K	5%	1/6W	
R408	1-247-849-00	CARBON	5.6K	5%	1/6W	
R409	1-247-831-00	CARBON	1K	5%	1/6W	
R410	1-247-831-00	CARBON	1K	5%	1/6W	
R411	1-247-847-00	CARBON	4.7K	5%	1/6W	
R412	1-247-828-00	CARBON	750	5%	1/6W	
R413	1-247-812-00	CARBON	160	5%	1/6W	

Ref.No	Part No.	Description				Remark
R414	1-247-847-00	CARBON	4.7K	5%	1/6W	
R415	1-247-831-00	CARBON	1K	5%	1/6W	
R416	1-247-846-00	CARBON	4.3K	5%	1/6W	
R510	1-247-824-00	CARBON	510	5%	1/6W	
R511	1-247-867-00	CARBON	33K	5%	1/6W	
R512	1-247-847-00	CARBON	4.7K	5%	1/6W	
R513	1-247-863-00	CARBON	22K	5%	1/6W	
R514	1-247-821-00	CARBON	390	5%	1/6W	
R515	1-247-839-00	CARBON	2.2K	5%	1/6W	
R516	1-247-821-00	CARBON	390	5%	1/6W	
R517	1-247-821-00	CARBON	390	5%	1/6W	
R518	1-247-821-00	CARBON	390	5%	1/6W	
R519	1-247-821-00	CARBON	390	5%	1/6W	
R520	1-247-839-00	CARBON	2.2K	5%	1/6W	
R521	1-247-821-00	CARBON	390	5%	1/6W	
R522	1-247-839-00	CARBON	2.2K	5%	1/6W	
R525	1-247-843-00	CARBON	3.3K	5%	1/6W	
R603	1-247-855-00	CARBON	10K	5%	1/6W	

VARIABLE RESISTOR

RV001	1-228-989-00	RES, ADJ, METAL GLAZE 470
RV002	1-228-748-00	RES, ADJ, CARBON 10K
RV003	1-228-750-00	RES, ADJ, CARBON 47K
RV004	1-228-989-00	RES, ADJ, METAL GLAZE 470
RV005	1-228-750-00	RES, ADJ, CARBON 47K
RV006	1-228-749-00	RES, ADJ, CARBON 22K
RV007	1-228-748-00	RES, ADJ, CARBON 10K
RV008	1-228-745-00	RES, ADJ, CARBON 1K
RV009	1-228-996-00	RES, ADJ, METAL GLAZE 47K
RV010	1-228-749-00	RES, ADJ, CARBON 22K
RV012	1-228-750-00	RES, ADJ, CARBON 47K
RV013	1-228-750-00	RES, ADJ, CARBON 47K
RV014	1-228-748-00	RES, ADJ, CARBON 10K
RV015	1-228-989-00	RES, ADJ, METAL GLAZE 470
RV016	1-228-745-00	RES, ADJ, CARBON 1K
RV017	1-228-753-00	RES, ADJ, CARBON 470K
RV019	1-228-993-00	RES, ADJ, METAL GLAZE 4.7K
RV020	1-228-745-00	RES, ADJ, CARBON 1K
RV021	1-228-750-00	RES, ADJ, CARBON 47K
RV401	1-228-994-00	RES, ADJ, METAL GLAZE 10K
RV501	1-228-744-00	RES, ADJ, CARBON 470

COIL

T001	1-426-093-00	COIL, REC C BPT

CRYSTAL

X001	1-527-345-00	CRYSTAL, OSC

****

When indicating parts by reference number, please include the board name.

RP-17

Ref.No	Part No.	Description			Remark
	♦:A-6711-528-A	RP-17 BOARD, COMPLETE			
		**********			
	♦:3-684-081-01	CASE (A) (MAIN), SHIELD, RP			
	♦:3-684-082-02	LID, UPPER, RP SHIELD CASE (A)			
	♦:3-684-083-02	LID, BOTTOM, RP SHIELD CASE(A)			
	♦:3-684-084-01	CASE (B) (MAIN), SHIELD, RP			
	♦:3-684-085-01	LID, UPPER, RP SHIELD CASE (B)			
	♦:3-684-086-01	LID, BOTTOM, RP SHIELD CASE(B)			
		CAPACITOR			
C003	1-101-004-00	CERAMIC	0.01MF		50V
C004	1-123-356-00	ELECT	10MF	20%	16V
C005	1-123-379-00	ELECT	0.47MF	20%	50V
C006	1-108-579-00	MYLAR	0.01MF	5%	50V
C007	1-123-356-00	ELECT	10MF	20%	16V
C008	1-101-004-00	CERAMIC	0.01MF		50V
C012	1-101-004-00	CERAMIC	0.01MF		50V
C013	1-102-820-00	CERAMIC	330PF	5%	50V
C014	1-123-356-00	ELECT	10MF	20%	16V
C017	1-102-973-00	CERAMIC	100PF	5%	50V
C018	1-102-973-00	CERAMIC	100PF	5%	50V
C019	1-102-824-00	CERAMIC	470PF	5%	50V
C020	1-102-120-00	CERAMIC	0.0018MF	10%	50V
C021	1-101-880-00	CERAMIC	47PF	5%	50V
C022	1-101-880-00	CERAMIC	47PF	5%	50V
C023	1-123-333-00	ELECT	100MF	20%	16V
C024	1-123-356-00	ELECT	10MF	20%	16V
C025	1-108-579-00	MYLAR	0.01MF	5%	50V
C026	1-123-379-00	ELECT	0.47MF	20%	50V
C027	1-123-356-00	ELECT	10MF	20%	16V
C028	1-101-004-00	CERAMIC	0.01MF		50V
C030	1-101-004-00	CERAMIC	0.01MF		50V
C033	1-102-977-00	CERAMIC	200PF	5%	50V
C034	1-123-332-00	ELECT	47MF	20%	16V
C035	1-101-004-00	CERAMIC	0.01MF		50V
C036	1-123-356-00	ELECT	10MF	20%	16V
C037	1-101-004-00	CERAMIC	0.01MF		50V
C039	1-101-006-00	CERAMIC	0.047MF		50V
C040	1-101-004-00	CERAMIC	0.01MF		50V
C041	1-102-960-00	CERAMIC	24PF	5%	50V
C042	1-102-960-00	CERAMIC	24PF	5%	50V
C043	1-123-318-00	ELECT	33MF	20%	16V
C044	1-101-004-00	CERAMIC	0.01MF		50V
C045	1-102-514-00	CERAMIC	22PF	5%	50V
C046	1-101-004-00	CERAMIC	0.01MF		50V
C047	1-101-004-00	CERAMIC	0.01MF		50V
C048	1-101-004-00	CERAMIC	0.01MF		50V
C049	1-101-004-00	CERAMIC	0.01MF		50V
C050	1-101-004-00	CERAMIC	0.01MF		50V
C051	1-101-004-00	CERAMIC	0.01MF		50V
C052	1-101-004-00	CERAMIC	0.01MF		50V

Ref.No	Part No.	Description			Remark
C053	1-101-004-00	CERAMIC	0.01MF		50V
C054	1-101-004-00	CERAMIC	0.01MF		50V
C055	1-101-004-00	CERAMIC	0.01MF		50V
C056	1-161-025-00	CERAMIC	0.1MF	10%	25V
C057	1-123-333-00	ELECT	100MF	20%	16V
C058	1-161-025-00	CERAMIC	0.1MF	10%	25V
C061	1-102-128-00	CERAMIC	0.0082MF	10%	50V
C062	1-101-004-00	CERAMIC	0.01MF		50V
C063	1-161-025-00	CERAMIC	0.1MF	10%	25V
C064	1-161-025-00	CERAMIC	0.1MF	10%	25V
C101	1-161-025-00	CERAMIC	0.1MF	10%	25V
C102	1-101-004-00	CERAMIC	0.01MF		50V
C103	1-161-025-00	CERAMIC	0.1MF	10%	25V
C104	1-101-004-00	CERAMIC	0.01MF		50V
C105	1-161-025-00	CERAMIC	0.1MF	10%	25V
C106	1-102-977-00	CERAMIC	200PF	5%	50V
C107	1-123-356-00	ELECT	10MF	20%	16V
C108	1-101-004-00	CERAMIC	0.01MF		50V
C109	1-161-025-00	CERAMIC	0.1MF	10%	25V
C110	1-101-004-00	CERAMIC	0.01MF		50V
C111	1-101-004-00	CERAMIC	0.01MF		50V
C112	1-161-025-00	CERAMIC	0.1MF	10%	25V
C113	1-161-025-00	CERAMIC	0.1MF	10%	25V
C114	1-102-978-00	CERAMIC	220PF	5%	50V
C115	1-101-004-00	CERAMIC	0.01MF		50V
C116	1-161-025-00	CERAMIC	0.1MF	10%	25V
C117	1-161-025-00	CERAMIC	0.1MF	10%	25V
C118	1-123-380-00	ELECT	1MF	20%	50V
C119	1-101-004-00	CERAMIC	0.01MF		50V
C120	1-123-380-00	ELECT	1MF	20%	50V
C121	1-102-531-00	CERAMIC	150PF	5%	50V
C122	1-161-025-00	CERAMIC	0.1MF	10%	25V
C123	1-123-318-00	ELECT	33MF	20%	16V
C124	1-101-004-00	CERAMIC	0.01MF		50V
C125	1-101-004-00	CERAMIC	0.01MF		50V
C126	1-161-025-00	CERAMIC	0.1MF	10%	25V
C127	1-123-318-00	ELECT	33MF	20%	16V
C128	1-101-004-00	CERAMIC	0.01MF		50V
C129	1-101-004-00	CERAMIC	0.01MF		50V
C130	1-161-025-00	CERAMIC	0.1MF	10%	25V
C201	1-123-356-00	ELECT	10MF	20%	16V
C202	1-123-356-00	ELECT	10MF	20%	16V
C203	1-123-356-00	ELECT	10MF	20%	16V
C204	1-123-356-00	ELECT	10MF	20%	16V
C205	1-123-356-00	ELECT	10MF	20%	16V
C206	1-123-380-00	ELECT	1MF	20%	50V
C207	1-123-318-00	ELECT	33MF	20%	16V
C208	1-123-356-00	ELECT	10MF	20%	16V
C209	1-123-356-00	ELECT	10MF	20%	16V
C210	1-102-121-00	CERAMIC	0.0022MF	10%	50V
C211	1-123-321-00	ELECT	220MF	20%	16V

When indicating parts by reference number, please include the board name.

Ref.No	Part No.	Description	Remark
		CONNECTOR	
CN001	♦:1-564-031-00	PIN, CONNECTOR 6P	
CN002	♦:1-564-030-00	PIN, CONNECTOR 5P	
CN003	♦:1-564-028-00	PIN, CONNECTOR 3P	
CN101	♦:1-564-031-00	PIN, CONNECTOR 6P	
CN102	♦:1-564-037-11	PIN, CONNECTOR 12P	
CN103	♦:1-564-030-21	PIN, CONNECTOR 5P	
CN202	♦:1-564-030-00	PIN, CONNECTOR 5P	
		DIODE	
D001	8-719-901-33	DIODE 1SS133	
D002	8-719-901-33	DIODE 1SS133	
D101	8-719-911-19	DIODE 1SS119	
D102	8-719-911-19	DIODE 1SS119	
D103	8-719-911-19	DIODE 1SS119	
D104	8-719-911-19	DIODE 1SS119	
D105	8-719-911-19	DIODE 1SS119	
D106	8-719-911-19	DIODE 1SS119	
D201	8-719-911-19	DIODE 1SS119	
D202	8-719-911-19	DIODE 1SS119	
D203	8-719-911-19	DIODE 1SS119	
		IC	
IC001	8-752-004-50	IC CX20045	
IC002	8-759-200-60	IC TA7060AP	
IC201	8-759-145-58	IC UPC4558C	
		COIL	
L001	1-408-876-00	MICRO INDUCTOR 0.18UH	
L002	1-408-427-00	MICRO INDUCTOR 330UH	
L003	1-408-429-00	MICRO INDUCTOR 470UH	
L006	1-408-421-00	MICRO INDUCTOR 100UH	
L009	1-408-422-00	MICRO INDUCTOR 120UH	
L010	1-408-411-00	MICRO INDUCTOR 15UH	
L011	1-408-411-00	MICRO INDUCTOR 15UH	
L012	1-408-878-00	MICRO INDUCTOR 0.33UH	
L013	1-408-427-00	MICRO INDUCTOR 330UH	
L014	1-408-429-00	MICRO INDUCTOR 470UH	
L016	1-408-429-00	MICRO INDUCTOR 470UH	
L017	1-408-415-00	MICRO INDUCTOR 33UH	
L020	1-407-495-00	MICRO INDUCTOR 1.8MMH	
L021	1-408-429-00	MICRO INDUCTOR 470UH	
L101	1-408-405-00	MICRO INDUCTOR 4.7UH	
L102	1-408-421-00	MICRO INDUCTOR 100UH	
L103	1-408-405-00	MICRO INDUCTOR 4.7UH	
L104	1-408-421-00	MICRO INDUCTOR 100UH	
L105	1-408-421-00	MICRO INDUCTOR 100UH	

Ref.No	Part No.	Description	Remark
		TRANSISTOR	
Q001	=>8-729-245-83	TRANSISTOR 2SC2458	
Q002	=>8-729-245-83	TRANSISTOR 2SC2458	
Q003	=>8-729-177-43	TRANSISTOR 2SD774	
Q004	=>8-729-204-83	TRANSISTOR 2SA1048-GR	
Q005	=>8-729-204-83	TRANSISTOR 2SA1048-GR	
Q006	=>8-729-245-83	TRANSISTOR 2SC2458	
Q007	=>8-729-245-83	TRANSISTOR 2SC2458	
Q008	=>8-729-245-83	TRANSISTOR 2SC2458	
Q101	=>8-729-245-83	TRANSISTOR 2SC2458	
Q102	8-729-800-42	TRANSISTOR 2SK152	
Q103	=>8-729-245-83	TRANSISTOR 2SC2458	
Q104	8-729-384-46	TRANSISTOR 2SA844-C	
Q105	8-729-603-30	TRANSISTOR 2SC403SP-3	
Q106	=>8-729-245-83	TRANSISTOR 2SC2458	
Q107	8-729-800-42	TRANSISTOR 2SK152	
Q108	8-729-384-46	TRANSISTOR 2SA844-C	
Q109	8-729-603-30	TRANSISTOR 2SC403SP-3	
Q110	=>8-729-245-83	TRANSISTOR 2SC2458	
Q111	8-729-603-30	TRANSISTOR 2SC403SP-3	
Q112	8-729-384-46	TRANSISTOR 2SA844-C	
Q113	8-729-113-33	TRANSISTOR 2SB733-4	
Q114	8-729-603-30	TRANSISTOR 2SC403SP-3	
Q115	8-729-603-30	TRANSISTOR 2SC403SP-3	
Q201	=>8-729-245-83	TRANSISTOR 2SC2458	
		RESISTOR	
R001	1-247-831-00	CARBON 1K 5% 1/6W	
R002	1-247-816-00	CARBON 240 5% 1/6W	
R004	1-247-857-00	CARBON 12K 5% 1/6W	
R009	1-247-832-00	CARBON 1.1K 5% 1/6W	
R010	1-247-829-00	CARBON 820 5% 1/6W	
R012	1-247-831-00	CARBON 1K 5% 1/6W	
R013	1-247-831-00	CARBON 1K 5% 1/6W	
R014	1-247-835-00	CARBON 1.5K 5% 1/6W	
R015	1-247-855-00	CARBON 10K 5% 1/6W	
R016	1-247-879-00	CARBON 100K 5% 1/6W	
R017	1-247-835-00	CARBON 1.5K 5% 1/6W	
R020	1-247-816-00	CARBON 240 5% 1/6W	
R022	1-247-866-00	CARBON 30K 5% 1/6W	
R023	1-247-862-00	CARBON 20K 5% 1/6W	
R024	1-247-824-00	CARBON 510 5% 1/6W	
R025	1-247-824-00	CARBON 510 5% 1/6W	
R026	1-247-823-00	CARBON 470 5% 1/6W	
R028	1-247-824-00	CARBON 510 5% 1/6W	
R036	1-247-836-00	CARBON 1.6K 5% 1/6W	
R037	1-247-864-00	CARBON 24K 5% 1/6W	
R038	1-247-866-00	CARBON 30K 5% 1/6W	

When indicating parts by reference number, please include the board name.

RP-17

Ref.No	Part No.	Description				Remark
R039 ⚠	1-212-857-00	FUSIBLE	10	5%	1/4W	F
R040	1-247-831-00	CARBON	1K	5%	1/6W	
R042	1-247-831-00	CARBON	1K	5%	1/6W	
R043	1-247-829-00	CARBON	820	5%	1/6W	
R045	1-247-807-00	CARBON	100	5%	1/6W	
R048	1-247-819-00	CARBON	330	5%	1/6W	
R049	1-247-819-00	CARBON	330	5%	1/6W	
R050	1-247-831-00	CARBON	1K	5%	1/6W	
R051	1-247-857-00	CARBON	12K	5%	1/6W	
R052	1-247-858-00	CARBON	13K	5%	1/6W	
R053	1-247-831-00	CARBON	1K	5%	1/6W	
R054	1-247-831-00	CARBON	1K	5%	1/6W	
R055	1-247-825-00	CARBON	560	5%	1/6W	
R056	1-247-831-00	CARBON	1K	5%	1/6W	
R057	1-247-851-00	CARBON	6.8K	5%	1/6W	
R058	1-247-843-00	CARBON	3.3K	5%	1/6W	
R059	1-247-841-00	CARBON	2.7K	5%	1/6W	
R060	1-247-831-00	CARBON	1K	5%	1/6W	
R061	1-247-829-00	CARBON	820	5%	1/6W	
R101	1-247-849-00	CARBON	5.6K	5%	1/6W	
R102	1-247-831-00	CARBON	1K	5%	1/6W	
R103	1-247-855-00	CARBON	10K	5%	1/6W	
R104	1-247-855-00	CARBON	10K	5%	1/6W	
R105	1-247-821-00	CARBON	390	5%	1/6W	
R106	1-247-818-00	CARBON	300	5%	1/6W	
R107	1-247-810-00	CARBON	130	5%	1/6W	
R109 ⚠	1-212-857-00	FUSIBLE	10	5%	1/4W	F
R110	1-247-831-00	CARBON	1K	5%	1/6W	
R111	1-247-807-00	CARBON	100	5%	1/6W	
R112	1-247-807-00	CARBON	100	5%	1/6W	
R113	1-247-849-00	CARBON	5.6K	5%	1/6W	
R114	1-247-818-00	CARBON	300	5%	1/6W	
R115	1-247-799-00	CARBON	47	5%	1/6W	
R116	1-247-827-00	CARBON	680	5%	1/6W	
R117	1-247-821-00	CARBON	390	5%	1/6W	
R118	1-247-807-00	CARBON	100	5%	1/6W	
R119	1-247-855-00	CARBON	10K	5%	1/6W	
R120	1-247-855-00	CARBON	10K	5%	1/6W	
R122	1-247-831-00	CARBON	1K	5%	1/6W	
R123	1-247-807-00	CARBON	100	5%	1/6W	
R124	1-247-839-00	CARBON	2.2K	5%	1/6W	
R125	1-247-869-00	CARBON	39K	5%	1/6W	
R126	1-247-831-00	CARBON	1K	5%	1/6W	
R127	1-247-853-00	CARBON	8.2K	5%	1/6W	
R128	1-247-855-00	CARBON	10K	5%	1/6W	
R129	1-247-820-00	CARBON	360	5%	1/6W	
R130	1-247-819-00	CARBON	330	5%	1/6W	
R131	1-247-799-00	CARBON	47	5%	1/6W	

Ref.No	Part No.	Description				Remark
R132 ⚠	1-211-608-00	CARBON	56	5%	1/2W	F
R133	1-247-823-00	CARBON	470	5%	1/6W	
R134	1-247-826-00	CARBON	620	5%	1/6W	
R135	1-247-079-00	CARBON	4.7	5%	1/4W	
R136	1-247-807-00	CARBON	100	5%	1/6W	
R137	1-247-857-00	CARBON	12K	5%	1/6W	
R138	1-247-827-00	CARBON	680	5%	1/6W	
R139	1-247-807-00	CARBON	100	5%	1/6W	
R140	1-247-807-00	CARBON	100	5%	1/6W	
R141	1-247-831-00	CARBON	1K	5%	1/6W	
R142	1-247-849-00	CARBON	5.6K	5%	1/6W	
R143	1-247-849-00	CARBON	5.6K	5%	1/6W	
R144	1-247-871-00	CARBON	47K	5%	1/6W	
R145	1-247-850-00	CARBON	6.2K	5%	1/6W	
R146	1-247-842-00	CARBON	3K	5%	1/6W	
R147	1-247-849-00	CARBON	5.6K	5%	1/6W	
R148	1-247-871-00	CARBON	47K	5%	1/6W	
R149	1-247-850-00	CARBON	6.2K	5%	1/6W	
R150	1-247-842-00	CARBON	3K	5%	1/6W	
R201	1-247-855-00	CARBON	10K	5%	1/6W	
R202	1-247-879-00	CARBON	100K	5%	1/6W	
R203	1-247-879-00	CARBON	100K	5%	1/6W	
R204	1-247-886-00	CARBON	200K	5%	1/6W	
R205	1-247-873-00	CARBON	56K	5%	1/6W	
R206	1-247-855-00	CARBON	10K	5%	1/6W	
R207	1-247-883-00	CARBON	150K	5%	1/6W	
R208	1-247-866-00	CARBON	30K	5%	1/6W	
R209	1-247-831-00	CARBON	1K	5%	1/6W	
R210	1-247-879-00	CARBON	100K	5%	1/6W	
R211	1-247-871-00	CARBON	47K	5%	1/6W	
R212	1-247-859-00	CARBON	15K	5%	1/6W	
R213 ⚠	1-212-857-00	FUSIBLE	10	5%	1/4W	F

VARIABLE RESISTOR

RV001	1-228-991-00	RES, ADJ, METAL GLAZE 2.2K
RV002	1-228-991-00	RES, ADJ, METAL GLAZE 2.2K
RV003	1-228-745-00	RES, ADJ, CARBON 1K
RV004	1-228-991-00	RES, ADJ, METAL GLAZE 2.2K
RV101	1-228-990-00	RES, ADJ, METAL GLAZE 1K
RV102	1-228-990-00	RES, ADJ, METAL GLAZE 1K

TRANSFORMER

T101	1-427-546-11	TRANSFORMER, I/O
T102	1-427-546-11	TRANSFORMER, I/O

THERMISTOR

TH201	1-800-202-XX	THERMISTOR S-10K

****

The components identified by shading and mark ⚠ are critical for safety. Replace only with part number specified.

When indicating parts by reference number, please include the board name.

Ref.No	Part No.	Description			Remark
The parts for AF-3 board whose end of part No. is -13.					
♦	A-6713-200-A	AF-3 BOARD, COMPLETE **********			
♦	3-684-072-01	LID, BOTTOM, AF SHIELD CASE(S)			
♦	3-684-087-01	CASE (S) (MAIN), SHIELD, AF			
	3-701-748-00	CLAMP			
		B.P.F			
BPF001	1-235-367-11	B.P.F			
BPF002	1-235-367-11	B.P.F			
BPF003	1-235-366-11	B.P.F			
BPF004	1-235-366-11	B.P.F			
		CAPACITOR			
C001	1-123-356-00	ELECT	10MF	20%	16V
C002	1-161-025-00	CERAMIC	0.1MF	10%	25V
C003	1-161-025-00	CERAMIC	0.1MF	10%	25V
C004	1-161-025-00	CERAMIC	0.1MF	10%	25V
C006	1-161-025-00	CERAMIC	0.1MF	10%	25V
C007	1-123-332-00	ELECT	47MF	20%	16V
C008	1-161-025-00	CERAMIC	0.1MF	10%	25V
C010	1-123-306-00	ELECT	47MF	20%	10V
C011	1-123-306-00	ELECT	47MF	20%	10V
C012	1-161-025-00	CERAMIC	0.1MF	10%	25V
C013	1-123-306-00	ELECT	47MF	20%	6.3V
C014	1-161-025-00	CERAMIC	0.1MF	10%	25V
C015	1-161-025-00	CERAMIC	0.1MF	10%	25V
C016	1-102-519-00	CERAMIC	36PF	5%	50V
C017	1-123-332-00	ELECT	47MF	20%	16V
C018	1-161-025-00	CERAMIC	0.1MF	10%	25V
C020	1-161-025-00	CERAMIC	0.1MF	10%	25V
C021	1-161-025-00	CERAMIC	0.1MF	10%	25V
C023	1-123-356-00	ELECT	10MF	20%	16V
C025	1-102-973-00	CERAMIC	100PF	5%	50V
C026	1-101-884-00	CERAMIC	56PF	5%	50V
C027	1-161-025-00	CERAMIC	0.1MF	10%	25V
C028	1-123-381-00	ELECT	2.2MF	20%	50V
C030	1-123-381-00	ELECT	2.2MF	20%	50V
C031	1-161-025-00	CERAMIC	0.1MF	10%	25V
C032	1-123-332-00	ELECT	47MF	20%	16V
C033	1-161-025-00	CERAMIC	0.1MF	10%	25V
C034	1-102-519-00	CERAMIC	36PF	5%	50V
C035	1-161-025-00	CERAMIC	0.1MF	10%	25V
C036	1-161-025-00	CERAMIC	0.1MF	10%	25V
C038	1-102-973-00	CERAMIC	100PF	5%	50V
C039	1-101-884-00	CERAMIC	56PF	5%	50V
C041	1-123-356-00	ELECT	10MF	20%	16V
C042	1-123-333-00	ELECT	100MF	20%	16V
C046	1-161-025-00	CERAMIC	0.1MF	10%	25V
C048	1-123-333-00	ELECT	100MF	20%	16V
C050	1-123-332-00	ELECT	47MF	20%	16V
C051	1-161-025-00	CERAMIC	0.1MF	10%	25V
C052	1-161-025-00	CERAMIC	0.1MF	10%	25V
C053	1-161-025-00	CERAMIC	0.1MF	10%	25V
C054	1-102-822-00	CERAMIC	390PF	5%	50V
C055	1-161-025-00	CERAMIC	0.1MF	10%	25V
C057	1-102-973-00	CERAMIC	100PF	5%	50V
C058	1-101-884-00	CERAMIC	56PF	5%	50V
C059	1-123-356-00	ELECT	10MF	20%	16V
C060	1-123-381-00	ELECT	2.2MF	20%	50V
C062	1-123-381-00	ELECT	2.2MF	20%	50V
C063	1-161-025-00	CERAMIC	0.1MF	10%	25V
C064	1-161-025-00	CERAMIC	0.1MF	10%	25V
C065	1-123-332-00	ELECT	47MF	20%	16V
C069	1-161-025-00	CERAMIC	0.1MF	10%	25V
C070	1-161-025-00	CERAMIC	0.1MF	10%	25V
C071	1-161-025-00	CERAMIC	0.1MF	10%	25V
C072	1-102-822-00	CERAMIC	390PF	5%	50V
C073	1-161-025-00	CERAMIC	0.1MF	10%	25V
C075	1-102-973-00	CERAMIC	100PF	5%	50V
C076	1-101-884-00	CERAMIC	56PF	5%	50V
C078	1-123-333-00	ELECT	100MF	20%	16V
C080	1-161-025-00	CERAMIC	0.1MF	10%	25V
C081	1-108-561-00	MYLAR	0.0018MF	5%	50V
C082	1-108-565-00	MYLAR	0.0027MF	5%	50V
C083	1-108-569-00	MYLAR	0.0039MF	5%	50V
C084	1-123-356-00	ELECT	10MF	20%	16V
C086	1-123-307-00	ELECT	100MF	20%	10V
C087	1-161-013-00	CERAMIC	0.01MF	10%	25V
C088	1-123-307-00	ELECT	100MF	20%	10V
C089	1-123-332-00	ELECT	47MF	20%	16V
C090	1-123-332-00	ELECT	47MF	20%	16V
C091	1-123-356-00	ELECT	10MF	20%	16V
C092	1-102-958-00	CERAMIC	20PF	5%	50V
C093	1-130-485-00	MYLAR	0.015MF	5%	50V
C095	1-130-485-00	MYLAR	0.015MF	5%	50V
C096	1-130-494-11	MYLAR	0.082MF	5%	50V
C098	1-130-475-00	MYLAR	0.0022MF	5%	50V
C099	1-102-936-00	CERAMIC	3PF	0.25PF	50V
C100	1-130-469-00	MYLAR	680PF	5%	50V
C101	1-108-590-00	MYLAR	0.03MF	5%	50V
C102	1-131-383-00	TANTALUM	10MF	10%	6.3V
C103	1-131-347-00	TANTALUM	1MF	20%	16V
C105	1-123-307-00	ELECT	100MF	20%	10V
C106	1-161-013-00	CERAMIC	0.01MF	10%	25V
C107	1-130-497-00	MYLAR	0.15MF	5%	50V
C109	1-108-569-00	MYLAR	0.0039MF	5%	50V
C110	1-108-565-00	MYLAR	0.0027MF	5%	50V
C111	1-108-561-00	MYLAR	0.0018MF	5%	50V
C115	1-123-356-00	ELECT	10MF	20%	16V
C116	1-123-307-00	ELECT	100MF	20%	10V
C117	1-123-332-00	ELECT	47MF	20%	16V
C118	1-123-332-00	ELECT	47MF	20%	16V
C119	1-102-958-00	CERAMIC	20PF	5%	50V
C120	1-130-485-00	MYLAR	0.015MF	5%	50V
C121	1-102-936-00	CERAMIC	3PF	0.25PF	50V
C122	1-130-469-00	MYLAR	680PF	5%	50V
C123	1-102-936-00	CERAMIC	3PF	0.25PF	50V
C124	1-130-497-00	MYLAR	0.15MF	5%	50V
C125	1-131-383-00	TANTALUM	10MF	10%	6.3V

When indicating parts by reference number, please include the board name.

AF-3

Ref.No	Part No.	Description			Remark
C126	1-131-347-00	TANTALUM	1MF	20%	16V
C127	1-108-590-00	MYLAR	0.03MF	5%	50V
C128	1-130-475-00	MYLAR	0.0022MF	5%	50V
C130	1-130-494-11	MYLAR	0.082MF	5%	50V
C131	1-130-485-00	MYLAR	0.015MF	5%	50V
C132	1-123-356-00	ELECT	10MF	20%	16V
C133	1-161-013-00	CERAMIC	0.01MF	10%	25V
C134	1-123-330-00	ELECT	22MF	20%	16V
C143	1-123-332-00	ELECT	47MF	20%	16V
C144	1-123-330-00	ELECT	22MF	20%	16V
C146	1-123-332-00	ELECT	47MF	20%	16V
C147	1-123-330-00	ELECT	22MF	20%	16V
C150	1-123-332-00	ELECT	47MF	20%	16V
C151	1-123-381-00	ELECT	2.2MF	20%	50V
C152	1-102-973-00	CERAMIC	100PF	5%	50V
C153	1-123-332-00	ELECT	47MF	20%	16V
C154	1-123-381-00	ELECT	2.2MF	20%	50V
C155	1-102-973-00	CERAMIC	100PF	5%	50V
C156	1-123-330-00	ELECT	22MF	20%	16V
C157	1-123-330-00	ELECT	22MF	20%	16V
C158	1-123-330-00	ELECT	22MF	20%	16V
C159	1-123-318-00	ELECT	33MF	20%	16V
C160	1-123-332-00	ELECT	47MF	20%	16V
C161	1-123-330-00	ELECT	22MF	20%	16V
C162	1-123-318-00	ELECT	33MF	20%	16V
C163	1-123-356-00	ELECT	10MF	20%	16V
C164	1-123-356-00	ELECT	10MF	20%	16V
C165	1-123-330-00	ELECT	22MF	20%	16V
C166	1-123-356-00	ELECT	10MF	20%	16V
C167	1-123-380-00	ELECT	1MF	20%	50V
C168	1-123-356-00	ELECT	10MF	20%	16V
C169	1-123-330-00	ELECT	22MF	20%	16V
C170	1-123-380-00	ELECT	1MF	20%	50V
C171	1-161-025-00	CERAMIC	0.1MF	10%	25V
C173	1-161-013-00	CERAMIC	0.01MF	10%	25V
C175	1-123-332-00	ELECT	47MF	20%	16V
C176	1-102-976-00	CERAMIC	180PF	5%	50V
C177	1-161-013-00	CERAMIC	0.01MF	10%	25V
C178	1-102-522-00	CERAMIC	51PF	5%	50V
C179	1-102-978-00	CERAMIC	220PF	5%	50V
C180	1-102-978-00	CERAMIC	220PF	5%	50V
C181	1-161-013-00	CERAMIC	0.01MF	10%	25V
C182	1-123-332-00	ELECT	47MF	20%	16V
C183	1-123-332-00	ELECT	47MF	20%	16V
C184	1-102-529-00	CERAMIC	100PF	5%	50V
C185	1-123-332-00	ELECT	47MF	20%	16V
C186	1-123-332-00	ELECT	47MF	20%	16V
C187	1-161-025-00	CERAMIC	0.1MF	10%	25V
C189	1-161-025-00	CERAMIC	0.1MF	10%	25V
C190	1-123-332-00	ELECT	47MF	20%	16V
C191	1-161-025-00	CERAMIC	0.1MF	10%	25V
C192	1-123-332-00	ELECT	47MF	20%	16V
C193	1-102-529-00	CERAMIC	100PF	5%	50V
C194	1-123-332-00	ELECT	47MF	20%	16V
C195	1-123-332-00	ELECT	47MF	20%	16V

Ref.No	Part No.	Description			Remark
C196	1-123-332-00	ELECT	47MF	20%	16V
C197	1-102-625-61	CERAMIC	100PF	5%	50V
C198	1-161-013-00	CERAMIC	0.01MF	10%	25V
C199	1-102-517-00	CERAMIC	30PF	5%	50V
C200	1-102-531-00	CERAMIC	150PF	5%	50V
C201	1-102-531-00	CERAMIC	150PF	5%	50V
C202	1-161-013-00	CERAMIC	0.01MF	10%	25V
C203	1-161-013-00	CERAMIC	0.01MF	10%	25V
C208	1-161-025-00	CERAMIC	0.1MF	10%	25V
C209	1-123-356-00	ELECT	10MF	20%	16V
C211	1-161-025-00	CERAMIC	0.1MF	10%	25V
C213	1-123-332-00	ELECT	47MF	20%	16V
C216	1-123-381-00	ELECT	2.2MF	20%	50V
C217	1-123-381-00	ELECT	2.2MF	20%	50V
C221	1-123-330-00	ELECT	22MF	20%	16V
C222	1-123-330-00	ELECT	22MF	20%	16V
C223	1-102-936-00	CERAMIC	3PF	0.25PF	50V
C224	1-123-380-00	ELECT	1MF	20%	50V
C225	1-161-013-00	CERAMIC	0.01MF	10%	25V
C226	1-161-013-00	CERAMIC	0.01MF	10%	25V
C227	1-161-013-00	CERAMIC	0.01MF	10%	25V
C229	1-130-471-00	MYLAR	0.001MF	5%	50V
C232	1-130-471-00	MYLAR	0.001MF	5%	50V
C235	1-161-013-00	CERAMIC	0.01MF	10%	25V
C236	1-130-491-00	MYLAR	0.047MF	5%	50V
C237	1-130-491-00	MYLAR	0.047MF	5%	50V
C238	1-123-330-00	ELECT	22MF	20%	16V
C240	1-161-025-00	CERAMIC	0.1MF	10%	25V
C241	1-123-356-00	ELECT	10MF	20%	16V
C501	1-124-233-00	ELECT	10MF	20%	16V
C701	1-123-356-00	ELECT	10MF	20%	16V
C702	1-123-356-00	ELECT	10MF	20%	16V
C704	1-123-322-00	ELECT	330MF	20%	16V
C706	1-124-231-00	ELECT	4.7MF	20%	16V
C709	1-123-381-00	ELECT	2.2MF	20%	50V
C710	1-130-469-00	MYLAR	680PF	5%	50V
C711	1-130-469-00	MYLAR	680PF	5%	50V
C712	1-123-332-00	ELECT	47MF	20%	16V
C713	1-123-332-00	ELECT	47MF	20%	16V
C714	1-130-469-00	MYLAR	680PF	5%	50V
C715	1-130-469-00	MYLAR	680PF	5%	50V
C722	1-124-231-00	ELECT	4.7MF	20%	16V
C724	1-123-380-00	ELECT	1MF	20%	50V
C725	1-123-380-00	ELECT	1MF	20%	50V
C726	1-161-039-00	CERAMIC	0.001MF	10%	25V
C727	1-102-824-00	CERAMIC	470PF	5%	50V
C728	1-102-824-00	CERAMIC	470PF	5%	50V
C731	1-123-332-00	ELECT	47MF	20%	16V
C732	1-123-332-00	ELECT	47MF	20%	16V
C733	1-161-013-00	CERAMIC	0.01MF	10%	25V
C734	1-124-168-00	ELECT	100MF	20%	16V
C735	1-123-381-00	ELECT	2.2MF	20%	50V
C736	1-123-381-00	ELECT	2.2MF	20%	50V
C737	1-161-055-00	CERAMIC	0.022MF	10%	25V

When indicating parts by reference number, please include the board name.

Ref.No	Part No.	Description			Remark
C738	1-123-233-00	ELECT	10MF	20%	16V
C739	1-161-057-00	CERAMIC	0.033MF	10%	25V
C741	1-124-475-11	ELECT	470MF	20%	16V
C742	1-123-352-00	ELECT	1MF	20%	50V
C743	1-123-352-00	ELECT	1MF	20%	50V

CONNECTOR

CN001	1-560-892-00	PIN, CONNECTOR 4P
CN002	1-560-891-00	PIN, CONNECTOR 3P
CN003	1-560-898-00	PIN, CONNECTOR 10P
CN004	1-560-896-00	PIN, CONNECTOR 8P
CN005	1-560-893-00	PIN, CONNECTOR 5P
CN006	1-560-892-00	PIN, CONNECTOR 4P
CN007	1-560-892-00	PIN, CONNECTOR 4P
CN008	1-560-897-00	PIN, CONNECTOR 9P
CN009	1-560-891-00	PIN, CONNECTOR 3P
CN011	1-560-900-00	PIN, CONNECTOR 12P
CN012	1-560-890-00	PIN, CONNECTOR 2P

DIODE

D007	8-719-911-19	DIODE 1SS119
D008	8-719-911-19	DIODE 1SS119
D011	8-719-000-12	DIODE MC931
D013	8-719-000-12	DIODE MC931
D017	=>8-719-911-19	DIODE 1SS119
D019	=>8-719-911-19	DIODE 1SS119
D025	8-719-100-34	DIODE RD5.6E-B1
D027	=>8-719-911-19	DIODE 1SS119
D504	8-719-911-19	DIODE 1SS119
D505	8-719-156-07	DIODE RD5.6E-B
D508	8-719-162-07	DIODE RD6.2E-B
D509	8-719-812-33	DIODE TLG123A
D510	8-719-812-33	DIODE TLG123A
D511	8-719-812-33	DIODE TLG123A
D512	8-719-812-33	DIODE TLG123A
D514	8-719-911-19	DIODE 1SS119
D515	8-719-911-19	DIODE 1SS119
D516	8-719-911-19	DIODE 1SS119
D517	8-719-911-19	DIODE 1SS119
D521	8-719-911-19	DIODE 1SS119
D522	8-719-911-19	DIODE 1SS119
D523	8-719-911-19	DIODE 1SS119
D524	8-719-812-33	DIODE TLG123A
D525	8-719-175-07	DIODE RD7.5E-B
D526	8-719-175-07	DIODE RD7.5E-B
D527	8-719-911-19	DIODE 1SS119
D528	8-719-911-19	DIODE 1SS119
D529	8-719-911-19	DIODE 1SS119
D530	8-719-911-19	DIODE 1SS119
D531	8-719-911-19	DIODE 1SS119
D532	8-719-911-19	DIODE 1SS119

IC

IC001	8-759-324-12	IC HA12412
IC002	8-759-324-12	IC HA12412
IC003	8-759-101-67	IC UPC1167C2
IC004	8-759-101-67	IC UPC1167C2
IC005	8-759-103-93	IC UPC393C
IC006	8-759-990-82	IC TL082CP
IC007	8-759-990-82	IC TL082CP
IC008	8-759-240-66	IC TC4066BP
IC009	8-759-240-66	IC TC4066BP
IC010	8-759-400-04	IC AN6120
IC011	8-759-400-04	IC AN6120
IC012	8-752-009-70	IC CX20097
IC013	8-759-700-62	IC NJM4562D
IC014	8-759-240-52	IC TC4052BP
IC015	8-759-700-62	IC NJM4562D
IC016	8-752-006-10	IC CX20061
IC017	8-752-006-10	IC CX20061
IC018	8-759-240-93	IC TC4093BP
IC019	8-759-240-01	IC TC4001BP
IC020	8-759-910-68	IC MB88201-152G

COIL

L001	1-408-421-00	MICRO INDUCTOR 100UH
L002	1-408-413-00	MICRO INDUCTOR 22UH
L003	1-407-163-XX	MICRO INDUCTOR 33UH
L004	1-410-079-11	COIL, PHASE SIFT 33UH
L005	1-410-079-11	COIL, PHASE SIFT 33UH
L007	1-408-415-00	MICRO INDUCTOR 33UH
L008	1-408-418-00	MICRO INDUCTOR 56UH
L010	1-408-413-00	MICRO INDUCTOR 22UH
L011	1-408-416-00	MICRO INDUCTOR 39UH
L012	1-407-163-XX	MICRO INDUCTOR 33UH
L013	1-408-413-00	MICRO INDUCTOR 22UH
L014	1-408-413-00	MICRO INDUCTOR 22UH
L015	1-408-413-00	MICRO INDUCTOR 22UH
L016	1-408-413-00	MICRO INDUCTOR 22UH
L020	1-408-417-00	MICRO INDUCTOR 47UH
L021	1-408-417-00	MICRO INDUCTOR 47UH
L022	1-408-417-00	MICRO INDUCTOR 47UH

L.P.F

LPF001	1-235-365-11	L.P.F
LPF002	1-235-365-11	L.P.F

IC LINK

PS001 ⚠	1-532-605-11	LINK. IC (ICP-N10)

TRANSISTOR

Q001 ⚠	8-729-113-33	TRANSISTOR 2SB733-4
Q002	=>8-729-245-83	TRANSISTOR 2SC2458
Q003	=>8-729-204-83	TRANSISTOR 2SA1048-GR
Q004	=>8-729-245-83	TRANSISTOR 2SC2458
Q007	8-729-177-43	TRANSISTOR 2SD774

The components identified by shading and mark ⚠ are critical for safety. Replace only with part number specified.

When indicating parts by reference number, please include the board name.

AF-3

Ref.No	Part No.	Description	Remark
Q008	8-729-603-50	TRANSISTOR 2SC403SP	
Q009	8-729-603-50	TRANSISTOR 2SC403SP	
Q010	8-729-106-07	TRANSISTOR 2SK514-H	
Q012	8-729-965-22	TRANSISTOR 2SC1652	
Q013	8-729-603-50	TRANSISTOR 2SC403SP	
Q015	8-729-106-07	TRANSISTOR 2SK514-H	
Q016	8-729-603-50	TRANSISTOR 2SC403SP	
Q017	=>8-729-245-83	TRANSISTOR 2SC2458	
Q019	=>8-729-245-83	TRANSISTOR 2SC2458	
Q020	=>8-729-245-83	TRANSISTOR 2SC2458	
Q021	=>8-729-245-83	TRANSISTOR 2SC2458	
Q022	=>8-729-245-83	TRANSISTOR 2SC2458	
Q023	=>8-729-245-83	TRANSISTOR 2SC2458	
Q024	=>8-729-245-83	TRANSISTOR 2SC2458	
Q030	=>8-729-245-83	TRANSISTOR 2SC2458	
Q031	=>8-729-245-83	TRANSISTOR 2SC2458	
Q032	8-729-965-22	TRANSISTOR 2SC1652	
Q034	8-729-965-22	TRANSISTOR 2SC1652	
Q035	8-729-965-22	TRANSISTOR 2SC1652	
Q036	8-729-965-22	TRANSISTOR 2SC1652	
Q037	=>8-729-245-83	TRANSISTOR 2SC2458	
Q038	=>8-729-245-83	TRANSISTOR 2SC2458	
Q044	8-729-965-22	TRANSISTOR 2SC1652	
Q046	=>8-729-245-83	TRANSISTOR 2SC2458	
Q049	8-729-900-89	TRANSISTOR DTC144ES	
Q701	=>8-729-245-83	TRANSISTOR 2SC2458	
Q703	=>8-729-245-83	TRANSISTOR 2SC2458	
Q704	=>8-729-245-83	TRANSISTOR 2SC2458	
Q705	=>8-729-245-83	TRANSISTOR 2SC2458	
Q706	8-729-965-22	TRANSISTOR 2SC1652	
Q707	8-729-993-72	TRANSISTOR 2SA937	
Q708	=>8-729-245-83	TRANSISTOR 2SC2458	
Q709	8-729-117-54	TRANSISTOR 2SA1175	
Q710	8-729-117-54	TRANSISTOR 2SA1175	
Q711	=>8-729-245-83	TRANSISTOR 2SC2458	
Q712	8-729-117-54	TRANSISTOR 2SA1175	
Q713	8-729-117-54	TRANSISTOR 2SA1175	
Q714	8-729-384-48	TRANSISTOR 2SA844	
Q715	8-729-384-48	TRANSISTOR 2SA844	
Q716	=>8-729-245-83	TRANSISTOR 2SC2458	
Q720	8-729-117-54	TRANSISTOR 2SA1175	
Q721	=>8-729-245-83	TRANSISTOR 2SC2458	
Q722	=>8-729-245-83	TRANSISTOR 2SC2458	
Q723	8-729-900-33	TRANSISTOR DTC144EF	
Q724	=>8-729-245-83	TRANSISTOR 2SC2458	
Q725	8-729-117-54	TRANSISTOR 2SA1175	

RESISTOR

Ref.No	Part No.	Description				Remark
R001	1-247-807-00	CARBON	100	5%	1/6W	
R002	1-247-847-00	CARBON	4.7K	5%	1/6W	
R003	1-247-831-00	CARBON	1K	5%	1/6W	
R004	1-247-867-00	CARBON	33K	5%	1/6W	
R005	1-247-867-00	CARBON	33K	5%	1/6W	
R006	1-247-823-00	CARBON	470	5%	1/6W	
R007	1-247-873-00	CARBON	56K	5%	1/6W	
R008	1-247-855-00	CARBON	10K	5%	1/6W	
R012	1-247-867-00	CARBON	33K	5%	1/6W	
R013	1-247-855-00	CARBON	10K	5%	1/6W	
R014	1-247-855-00	CARBON	10K	5%	1/6W	
R026	1-247-823-00	CARBON	470	5%	1/6W	
R027	1-247-861-00	CARBON	18K	5%	1/6W	
R028	1-247-831-00	CARBON	1K	5%	1/6W	
R029	1-247-825-00	CARBON	560	5%	1/6W	
R030	1-247-815-00	CARBON	220	5%	1/6W	
R031	1-247-822-00	CARBON	430	5%	1/6W	
R033	1-247-809-00	CARBON	120	5%	1/6W	
R034	1-247-819-00	CARBON	330	5%	1/6W	
R035 ⚠	1-212-853-00	FUSIBLE	6.8	5%	1/4W	F
R036	1-247-855-00	CARBON	10K	5%	1/6W	
R037	1-247-823-00	CARBON	470	5%	1/6W	
R038	1-247-855-00	CARBON	10K	5%	1/6W	
R039	1-247-855-00	CARBON	10K	5%	1/6W	
R040	1-247-855-00	CARBON	10K	5%	1/6W	
R042	1-247-855-00	CARBON	10K	5%	1/6W	
R043	1-247-855-00	CARBON	10K	5%	1/6W	
R044	1-247-823-00	CARBON	470	5%	1/6W	
R045	1-247-861-00	CARBON	18K	5%	1/6W	
R046	1-247-831-00	CARBON	1K	5%	1/6W	
R047	1-247-825-00	CARBON	560	5%	1/6W	
R048	1-247-847-00	CARBON	4.7K	5%	1/6W	
R049	1-247-815-00	CARBON	220	5%	1/6W	
R050	1-247-822-00	CARBON	430	5%	1/6W	
R052	1-247-809-00	CARBON	120	5%	1/6W	
R054	1-247-855-00	CARBON	10K	5%	1/6W	
R055	1-247-855-00	CARBON	10K	5%	1/6W	
R056	1-247-855-00	CARBON	10K	5%	1/6W	
R057	1-247-855-00	CARBON	10K	5%	1/6W	
R061	1-247-831-00	CARBON	1K	5%	1/6W	
R069	1-247-839-00	CARBON	2.2K	5%	1/6W	
R071	1-247-855-00	CARBON	10K	5%	1/6W	
R072	1-247-879-00	CARBON	100K	5%	1/6W	
R073	1-247-851-00	CARBON	6.8K	5%	1/6W	
R074	1-247-867-00	CARBON	33K	5%	1/6W	
R078	1-247-823-00	CARBON	470	5%	1/6W	
R079	1-247-831-00	CARBON	1K	5%	1/6W	
R080	1-247-825-00	CARBON	560	5%	1/6W	
R081	1-247-813-00	CARBON	180	5%	1/6W	
R082	1-247-815-00	CARBON	220	5%	1/6W	
R083	1-247-822-00	CARBON	430	5%	1/6W	
R085	1-247-814-00	CARBON	200	5%	1/6W	
R087	1-247-855-00	CARBON	10K	5%	1/6W	
R088	1-247-855-00	CARBON	10K	5%	1/6W	
R089	1-247-855-00	CARBON	10K	5%	1/6W	
R090	1-247-823-00	CARBON	470	5%	1/6W	
R091	1-247-855-00	CARBON	10K	5%	1/6W	

The components identified by shading and mark ⚠ are critical for safety. Replace only with part number specified.

When indicating parts by reference number, please include the board name.

Ref.No	Part No.	Description				Remark
R093	1-247-831-00	CARBON	1K	5%	1/6W	
R099	1-247-838-00	CARBON	2K	5%	1/6W	
R105	1-247-839-00	CARBON	2.2K	5%	1/6W	
R106	1-247-823-00	CARBON	470	5%	1/6W	
R107	1-247-831-00	CARBON	1K	5%	1/6W	
R108	1-247-825-00	CARBON	560	5%	1/6W	
R110	1-247-839-00	CARBON	2.2K	5%	1/6W	
R111	1-247-867-00	CARBON	33K	5%	1/6W	
R112	1-247-855-00	CARBON	10K	5%	1/6W	
R113	1-247-815-00	CARBON	220	5%	1/6W	
R115	1-247-822-00	CARBON	430	5%	1/6W	
R116	1-247-814-00	CARBON	200	5%	1/6W	
R117	1-247-855-00	CARBON	10K	5%	1/6W	
R118	1-247-855-00	CARBON	10K	5%	1/6W	
R119	1-247-855-00	CARBON	10K	5%	1/6W	
R120	1-247-855-00	CARBON	10K	5%	1/6W	
R122	1-247-848-00	CARBON	5.1K	5%	1/6W	
R123	1-247-863-00	CARBON	22K	5%	1/6W	
R124	1-247-863-00	CARBON	22K	5%	1/6W	
R125	1-247-863-00	CARBON	22K	5%	1/6W	
R126	1-247-839-00	CARBON	2.2K	5%	1/6W	
R127	1-247-863-00	CARBON	22K	5%	1/6W	
R128	1-247-863-00	CARBON	22K	5%	1/6W	
R129	1-247-863-00	CARBON	22K	5%	1/6W	
R130	1-247-839-00	CARBON	2.2K	5%	1/6W	
R132	1-247-855-00	CARBON	10K	5%	1/6W	
R133	1-247-859-00	CARBON	15K	5%	1/6W	
R134	1-247-840-00	CARBON	2.4K	5%	1/6W	
R135	1-247-824-00	CARBON	510	5%	1/6W	
R136	1-247-855-00	CARBON	10K	5%	1/6W	
R137	1-247-855-00	CARBON	10K	5%	1/6W	
R138	1-247-822-00	CARBON	430	5%	1/6W	
R139	1-247-842-00	CARBON	3K	5%	1/6W	
R140	1-247-858-00	CARBON	13K	5%	1/6W	
R141	1-247-858-00	CARBON	13K	5%	1/6W	
R142	1-247-838-00	CARBON	2K	5%	1/6W	
R143	1-247-842-00	CARBON	3K	5%	1/6W	
R144	1-247-895-00	CARBON	470K	5%	1/6W	
R146	1-247-849-00	CARBON	5.6K	5%	1/6W	
R147	1-247-865-00	CARBON	27K	5%	1/6W	
R148	1-247-848-00	CARBON	5.1K	5%	1/6W	
R149	1-247-828-00	CARBON	750	5%	1/6W	
R150	1-247-814-00	CARBON	200	5%	1/6W	
R151	1-247-851-00	CARBON	6.8K	5%	1/6W	
R152	1-247-847-00	CARBON	4.7K	5%	1/6W	
R157	1-247-855-00	CARBON	10K	5%	1/6W	
R158	1-247-859-00	CARBON	15K	5%	1/6W	
R159	1-247-840-00	CARBON	2.4K	5%	1/6W	
R160	1-247-824-00	CARBON	510	5%	1/6W	
R161	1-247-855-00	CARBON	10K	5%	1/6W	
R162	1-247-843-00	CARBON	3.3K	5%	1/6W	
R163	1-247-855-00	CARBON	10K	5%	1/6W	

Ref.No	Part No.	Description				Remark
R164	1-247-855-00	CARBON	10K	5%	1/6W	
R165	1-247-842-00	CARBON	3K	5%	1/6W	
R166	1-247-822-00	CARBON	430	5%	1/6W	
R167	1-247-858-00	CARBON	13K	5%	1/6W	
R168	1-247-838-00	CARBON	2K	5%	1/6W	
R169	1-247-858-00	CARBON	13K	5%	1/6W	
R170	1-247-842-00	CARBON	3K	5%	1/6W	
R172	1-247-865-00	CARBON	27K	5%	1/6W	
R173	1-247-895-00	CARBON	470K	5%	1/6W	
R174	1-247-849-00	CARBON	5.6K	5%	1/6W	
R175	1-247-836-00	CARBON	1.6K	5%	1/6W	
R176	1-247-814-00	CARBON	200	5%	1/6W	
R177	1-247-848-00	CARBON	5.1K	5%	1/6W	
R178	1-247-828-00	CARBON	750	5%	1/6W	
R179 ⚠	1-247-815-00	CARBON	220	5%	1/6W	
R180	1-215-465-00	METAL	68K	1%	1/6W	
R181	1-215-446-00	METAL	11K	1%	1/6W	
R183	1-215-462-00	METAL	51K	1%	1/6W	
R184	1-215-462-00	METAL	51K	1%	1/6W	
R185	1-247-871-00	CARBON	47K	5%	1/6W	
R190	1-215-446-00	METAL	11K	1%	1/6W	
R191	1-215-465-00	METAL	68K	1%	1/6W	
R194	1-247-872-00	CARBON	51K	5%	1/6W	
R200	1-247-872-00	CARBON	51K	5%	1/6W	
R205	1-247-855-00	CARBON	10K	5%	1/6W	
R206	1-247-859-00	CARBON	15K	5%	1/6W	
R217 ⚠	1-247-815-00	CARBON	220	5%	1/6W	
R218	1-247-871-00	CARBON	47K	5%	1/6W	
R220	1-247-875-00	CARBON	68K	5%	1/6W	
R221	1-247-850-00	CARBON	6.2K	5%	1/6W	
R222	1-247-863-00	CARBON	22K	5%	1/6W	
R223	1-247-831-00	CARBON	1K	5%	1/6W	
R224	1-247-887-00	CARBON	220K	5%	1/6W	
R225	1-247-842-00	CARBON	3K	5%	1/6W	
R226	1-247-879-00	CARBON	100K	5%	1/6W	
R227	1-247-855-00	CARBON	10K	5%	1/6W	
R228	1-247-879-00	CARBON	100K	5%	1/6W	
R229	1-247-831-00	CARBON	1K	5%	1/6W	
R230	1-247-887-00	CARBON	220K	5%	1/6W	
R231	1-247-842-00	CARBON	3K	5%	1/6W	
R232	1-247-848-00	CARBON	5.1K	5%	1/6W	
R233	1-247-848-00	CARBON	5.1K	5%	1/6W	
R234 ⚠	1-247-815-00	CARBON	220	5%	1/6W	
R235	1-247-871-00	CARBON	47K	5%	1/6W	
R236	1-247-871-00	CARBON	47K	5%	1/6W	
R237	1-247-839-00	CARBON	2.2K	5%	1/6W	
R239	1-247-863-00	CARBON	22K	5%	1/6W	
R240	1-247-871-00	CARBON	47K	5%	1/6W	
R241	1-247-875-00	CARBON	68K	5%	1/6W	
R243	1-247-850-00	CARBON	6.2K	5%	1/6W	
R244	1-247-855-00	CARBON	10K	5%	1/6W	
R245	1-247-855-00	CARBON	10K	5%	1/6W	
R246	1-247-855-00	CARBON	10K	5%	1/6W	

The components identified by shading and mark ⚠ are critical for safety. Replace only with part number specified.

When indicating parts by reference number, please include the board name.

AF-3

Ref.No	Part No.	Description				Remark
R247	1-247-855-00	CARBON	10K	5%	1/6W	
R248	1-247-863-00	CARBON	22K	5%	1/6W	
R249	1-247-855-00	CARBON	10K	5%	1/6W	
R253	1-247-855-00	CARBON	10K	5%	1/6W	
R255	1-247-867-00	CARBON	33K	5%	1/6W	
R256	1-247-863-00	CARBON	22K	5%	1/6W	
R262	1-247-851-00	CARBON	6.8K	5%	1/6W	
R263	1-247-823-00	CARBON	470	5%	1/6W	
R264	1-247-861-00	CARBON	18K	5%	1/6W	
R265	1-247-861-00	CARBON	18K	5%	1/6W	
R266	1-247-807-00	CARBON	100	5%	1/6W	
R267	1-215-442-00	METAL	7.5K	1%	1/6W	
R268	1-247-843-00	CARBON	3.3K	5%	1/6W	
R269	1-247-855-00	CARBON	10K	5%	1/6W	
R270	1-247-855-00	CARBON	10K	5%	1/6W	
R271	1-247-875-00	CARBON	68K	5%	1/6W	
R272	1-247-871-00	CARBON	47K	5%	1/6W	
R273	1-247-871-00	CARBON	47K	5%	1/6W	
R275	1-247-851-00	CARBON	6.8K	5%	1/6W	
R276	1-247-823-00	CARBON	470	5%	1/6W	
R277	1-247-861-00	CARBON	18K	5%	1/6W	
R278	1-247-861-00	CARBON	18K	5%	1/6W	
R279	1-247-807-00	CARBON	100	5%	1/6W	
R280	1-215-421-00	METAL	1K	1%	1/6W	
R281	1-247-844-00	CARBON	3.6K	5%	1/6W	
R282	1-247-855-00	CARBON	10K	5%	1/6W	
R283	1-247-855-00	CARBON	10K	5%	1/6W	
R284	1-247-869-00	CARBON	39K	5%	1/6W	
R285	1-247-871-00	CARBON	47K	5%	1/6W	
R286	1-247-871-00	CARBON	47K	5%	1/6W	
R288	1-215-453-00	METAL	22K	1%	1/6W	
R289	1-215-453-00	METAL	22K	1%	1/6W	
R290	1-247-807-00	CARBON	100	5%	1/6W	
R291	1-247-831-00	CARBON	1K	5%	1/6W	
R293	1-247-867-00	CARBON	33K	5%	1/6W	
R296	1-247-867-00	CARBON	33K	5%	1/6W	
R297	1-247-848-00	CARBON	5.1K	5%	1/6W	
R298	1-247-863-00	CARBON	22K	5%	1/6W	
R299	1-247-863-00	CARBON	22K	5%	1/6W	
R300	1-247-863-00	CARBON	22K	5%	1/6W	
R301	1-247-855-00	CARBON	10K	5%	1/6W	
R302	1-247-855-00	CARBON	10K	5%	1/6W	
R303	1-247-871-00	CARBON	47K	5%	1/6W	
R304	1-247-855-00	CARBON	10K	5%	1/6W	
R308	1-247-863-00	CARBON	22K	5%	1/6W	
R310	1-247-847-00	CARBON	4.7K	5%	1/6W	
R311	1-247-855-00	CARBON	10K	5%	1/6W	
R312	1-247-843-00	CARBON	3.3K	5%	1/6W	
R313	1-247-855-00	CARBON	10K	5%	1/6W	
R315	1-247-855-00	CARBON	10K	5%	1/6W	
R322	1-247-879-00	CARBON	100K	5%	1/6W	
R323	1-247-839-00	CARBON	2.2K	5%	1/6W	
R324	1-247-871-00	CARBON	47K	5%	1/6W	

Ref.No	Part No.	Description				Remark
R325	1-247-879-00	CARBON	100K	5%	1/6W	
R326	1-247-831-00	CARBON	1K	5%	1/6W	
R327	1-247-859-00	CARBON	15K	5%	1/6W	
R330	1-247-838-00	CARBON	2K	5%	1/6W	
R332	1-247-862-00	CARBON	20K	5%	1/6W	
R338	1-247-862-00	CARBON	20K	5%	1/6W	
R343	1-247-807-00	CARBON	100	5%	1/6W	
R344	1-247-807-00	CARBON	100	5%	1/6W	
R345	1-247-820-00	CARBON	360	5%	1/6W	
R346	1-247-820-00	CARBON	360	5%	1/6W	
R350	1-247-843-00	CARBON	3.3K	5%	1/6W	
R351	1-247-843-00	CARBON	3.3K	5%	1/6W	
R352	1-247-857-00	CARBON	12K	5%	1/6W	
R601	1-247-871-00	CARBON	47K	5%	1/6W	
R701	1-247-855-00	CARBON	10K	5%	1/6W	
R702	1-247-855-00	CARBON	10K	5%	1/6W	
R703	1-247-847-00	CARBON	4.7K	5%	1/6W	
R706	1-247-843-00	CARBON	3.3K	5%	1/6W	
R707	1-247-847-00	CARBON	4.7K	5%	1/6W	
R708	1-247-843-00	CARBON	3.3K	5%	1/6W	
R711	1-247-867-00	CARBON	33K	5%	1/6W	
R712	1-247-867-00	CARBON	33K	5%	1/6W	
R713	1-247-855-00	CARBON	10K	5%	1/6W	
R714	1-247-867-00	CARBON	33K	5%	1/6W	
R715	1-247-867-00	CARBON	33K	5%	1/6W	
R716	1-247-855-00	CARBON	10K	5%	1/6W	
R718	1-247-849-00	CARBON	5.6K	5%	1/6W	
R719	1-247-849-00	CARBON	5.6K	5%	1/6W	
R720	1-247-849-00	CARBON	5.6K	5%	1/6W	
R721	1-247-849-00	CARBON	5.6K	5%	1/6W	
R722	1-247-867-00	CARBON	33K	5%	1/6W	
R724	1-247-867-00	CARBON	33K	5%	1/6W	
R725	1-247-855-00	CARBON	10K	5%	1/6W	
R726	1-247-867-00	CARBON	33K	5%	1/6W	
R727	1-247-867-00	CARBON	33K	5%	1/6W	
R728	1-247-855-00	CARBON	10K	5%	1/6W	
R729	1-247-839-00	CARBON	2.2K	5%	1/6W	
R730	1-247-813-00	CARBON	180	5%	1/6W	
R731	1-247-813-00	CARBON	180	5%	1/6W	
R732	1-247-867-00	CARBON	33K	5%	1/6W	
R734	1-247-812-00	CARBON	160	5%	1/6W	
R735	1-247-812-00	CARBON	160	5%	1/6W	
R736	1-247-867-00	CARBON	33K	5%	1/6W	
R737	1-247-821-00	CARBON	390	5%	1/6W	
R739	1-247-863-00	CARBON	22K	5%	1/6W	
R740	1-247-863-00	CARBON	22K	5%	1/6W	
R741	1-247-855-00	CARBON	10K	5%	1/6W	
R742	1-247-859-00	CARBON	15K	5%	1/6W	
R743	1-247-859-00	CARBON	15K	5%	1/6W	
R744	1-247-847-00	CARBON	4.7K	5%	1/6W	
R745	1-247-847-00	CARBON	4.7K	5%	1/6W	
R746	1-247-855-00	CARBON	10K	5%	1/6W	
R747	1-247-855-00	CARBON	10K	5%	1/6W	
R748	1-247-843-00	CARBON	3.3K	5%	1/6W	
R749	1-247-843-00	CARBON	3.3K	5%	1/6W	

When indicating parts by reference number, please include the board name.

Ref.No	Part No.	Description				Remark
R750	1-247-871-00	CARBON	47K	5%	1/6W	
R751	1-247-871-00	CARBON	47K	5%	1/6W	
R754	1-247-903-00	CARBON	1M	5%	1/6W	
R755	1-247-903-00	CARBON	1M	5%	1/6W	
R756	1-247-839-00	CARBON	2.2K	5%	1/6W	
R757	1-247-839-00	CARBON	2.2K	5%	1/6W	
R758	1-247-810-00	CARBON	130	5%	1/6W	
R759	1-247-810-00	CARBON	130	5%	1/6W	
R780	1-247-825-00	CARBON	560	5%	1/6W	
R781	1-247-825-00	CARBON	560	5%	1/6W	
R782	1-247-867-00	CARBON	33K	5%	1/6W	
R783	1-247-867-00	CARBON	33K	5%	1/6W	
R784	1-247-825-00	CARBON	560	5%	1/6W	
R785	1-247-825-00	CARBON	560	5%	1/6W	
R786	1-247-855-00	CARBON	10K	5%	1/6W	
R787	1-247-855-00	CARBON	10K	5%	1/6W	
R788 ⚠	1-247-831-00	CARBON	1K	5%	1/6W	
R789	1-247-896-00	CARBON	510K	5%	1/6W	
R790	1-247-855-00	CARBON	10K	5%	1/6W	
R793	1-247-855-00	CARBON	10K	5%	1/6W	
R794	1-247-847-00	CARBON	4.7K	5%	1/6W	
R795	1-247-847-00	CARBON	4.7K	5%	1/6W	
R796	1-247-839-00	CARBON	2.2K	5%	1/6W	
R797	1-247-839-00	CARBON	2.2K	5%	1/6W	
R798	1-247-803-00	CARBON	68	5%	1/6W	
R799	1-247-831-00	CARBON	1K	5%	1/6W	
R800	1-247-831-00	CARBON	1K	5%	1/6W	
R801 ⚠	1-247-815-00	CARBON	220	5%	1/6W	
R802 ⚠	1-247-815-00	CARBON	220	5%	1/6W	
R803	1-247-875-00	CARBON	68K	5%	1/6W	
R804	1-247-879-00	CARBON	100K	5%	1/6W	
R805	1-247-879-00	CARBON	100K	5%	1/6W	
R806	1-247-855-00	CARBON	10K	5%	1/6W	
R807	1-247-815-00	CARBON	220	5%	1/6W	
R808	1-247-815-00	CARBON	220	5%	1/6W	
R809	1-247-813-00	CARBON	180	5%	1/6W	
R810	1-247-873-00	CARBON	56K	5%	1/6W	
R811	1-247-855-00	CARBON	10K	5%	1/6W	
R812	1-247-855-00	CARBON	10K	5%	1/6W	
R813	1-247-855-00	CARBON	10K	5%	1/6W	
R814	1-247-855-00	CARBON	10K	5%	1/6W	
R815	1-247-855-00	CARBON	10K	5%	1/6W	
R816	1-247-895-00	CARBON	470K	5%	1/6W	
R817	1-247-879-00	CARBON	100K	5%	1/6W	
R818	1-247-895-00	CARBON	470K	5%	1/6W	
R819	1-247-895-00	CARBON	470K	5%	1/6W	
R820	1-247-895-00	CARBON	470K	5%	1/6W	
R821	1-247-895-00	CARBON	470K	5%	1/6W	
R828	1-247-887-00	CARBON	220K	5%	1/6W	

VARIABLE RESISTOR

RV005	1-228-996-00	RES, ADJ, METAL GLAZE	47K
RV006	1-228-996-00	RES, ADJ, METAL GLAZE	47K
RV010	1-228-996-00	RES, ADJ, METAL GLAZE	47K
RV012	1-228-996-00	RES, ADJ, METAL GLAZE	47K
RV013	1-228-993-00	RES, ADJ, METAL GLAZE	4.7K

The components identified by shading and mark ⚠ are critical for safety. Replace only with part number specified.

When indicating parts by reference number, please include the board name.

Ref.No	Part No.	Description	Remark
RV014	1-228-990-00	RES, ADJ, METAL GLAZE 1K	
RV015	1-228-991-00	RES, ADJ, METAL GLAZE 2.2K	
RV016	1-228-990-00	RES, ADJ, METAL GLAZE 1K	
RV017	1-228-991-00	RES, ADJ, METAL GLAZE 2.2K	
RV018	1-228-993-00	RES, ADJ, METAL GLAZE 4.7K	
RV019	1-228-993-00	RES, ADJ, METAL GLAZE 4.7K	
RV020	1-228-997-00	RES, ADJ, METAL GLAZE 100K	
RV021	1-228-997-00	RES, ADJ, METAL GLAZE 100K	
RV022	1-228-997-00	RES, ADJ, METAL GLAZE 100K	
RV023	1-228-997-00	RES, ADJ, METAL GLAZE 100K	

Q DET COIL

T002	1-404-545-11	COIL, Q DET
T004	1-404-545-11	COIL, Q DET
T006	1-404-544-11	COIL, Q DET
T008	1-404-544-11	COIL, Q DET

****

The parts for AF-3 board whose end of part No. is -14 or -15.

♦:A-6713-200-A	AF-3 BOARD, COMPLETE	
	**********	
♦:3-684-072-01	LID, BOTTOM, AF SHIELD CASE(S)	
♦:3-684-087-01	CASE (S) (MAIN), SHIELD, AF	
3-701-748-00	CLAMP	

BPF

BPF001	1-235-367-11	B.P.F
BPF002	1-235-367-11	B.P.F
BPF003	1-235-366-11	B.P.F
BPF004	1-235-366-11	B.P.F

CAPACITOR

C001	1-123-356-00	ELECT	10MF	20%	16V
C002	1-161-025-00	CERAMIC	0.1MF	10%	25V
C003	1-161-025-00	CERAMIC	0.1MF	10%	25V
C004	1-161-025-00	CERAMIC	0.1MF	10%	25V
C006	1-161-025-00	CERAMIC	0.1MF	10%	25V
C007	1-123-332-00	ELECT	47MF	20%	16V
C008	1-161-025-00	CERAMIC	0.1MF	10%	25V
C010	1-123-306-00	ELECT	47MF	20%	10V
C011	1-123-306-00	ELECT	47MF	20%	10V
C012	1-161-025-00	CERAMIC	0.1MF	10%	25V
C013	1-123-306-00	ELECT	47MF	20%	6.3V
C015	1-161-025-00	CERAMIC	0.1MF	10%	25V
C016	1-102-519-00	CERAMIC	36PF	5%	50V
C017	1-123-332-00	ELECT	47MF	20%	16V
C018	1-161-025-00	CERAMIC	0.1MF	10%	25V
C020	1-161-025-00	CERAMIC	0.1MF	10%	25V
C021	1-161-025-00	CERAMIC	0.1MF	10%	25V
C023	1-123-356-00	ELECT	10MF	20%	16V
C025	1-102-973-00	CERAMIC	100PF	5%	50V
C026	1-101-884-00	CERAMIC	56PF	5%	50V

AF-3

Ref.No	Part NO.	Description			Remark
C027	1-161-025-00	CERAMIC	0.1MF	10%	25V
C028	1-123-381-00	ELECT	2.2MF	20%	50V
C030	1-123-381-00	ELECT	2.2MF	20%	50V
C031	1-161-025-00	CERAMIC	0.1MF	10%	25V
C032	1-123-332-00	ELECT	47MF	20%	16V
C033	1-161-025-00	CERAMIC	0.1MF	10%	25V
C034	1-102-519-00	CERAMIC	36PF	5%	50V
C035	1-161-025-00	CERAMIC	0.1MF	10%	25V
C036	1-161-025-00	CERAMIC	0.1MF	10%	25V
C038	1-102-973-00	CERAMIC	100PF	5%	50V
C039	1-101-884-00	CERAMIC	56PF	5%	50V
C041	1-123-356-00	ELECT	10MF	20%	16V
C042	1-123-333-00	ELECT	100MF	20%	16V
C046	1-161-025-00	CERAMIC	0.1MF	10%	25V
C048	1-123-333-00	ELECT	100MF	20%	16V
C050	1-123-332-00	ELECT	47MF	20%	16V
C054	1-102-822-00	CERAMIC	390PF	5%	50V
C055	1-161-025-00	CERAMIC	0.1MF	10%	25V
C057	1-102-973-00	CERAMIC	100PF	5%	50V
C058	1-101-884-00	CERAMIC	56PF	5%	50V
C059	1-123-356-00	ELECT	10MF	20%	16V
C060	1-123-381-00	ELECT	2.2MF	20%	50V
C062	1-123-381-00	ELECT	2.2MF	20%	50V
C063	1-161-025-00	CERAMIC	0.1MF	10%	25V
C065	1-123-332-00	ELECT	47MF	20%	16V
C069	1-161-025-00	CERAMIC	0.1MF	10%	25V
C072	1-102-822-00	CERAMIC	390PF	5%	50V
C073	1-161-025-00	CERAMIC	0.1MF	10%	25V
C075	1-102-973-00	CERAMIC	100PF	5%	50V
C076	1-101-884-00	CERAMIC	56PF	5%	50V
C080	1-161-025-00	CERAMIC	0.1MF	10%	25V
C081	1-106-178-00	MYLAR	0.0018MF	5%	50V
C082	1-106-182-00	MYLAR	0.0027MF	5%	50V
C083	1-106-186-00	MYLAR	0.0039MF	5%	50V
C084	1-123-356-00	ELECT	10MF	20%	16V
C086	1-123-307-00	ELECT	100MF	20%	10V
C087	1-161-013-00	CERAMIC	0.01MF	10%	25V
C088	1-123-307-00	ELECT	100MF	20%	10V
C089	1-123-332-00	ELECT	47MF	20%	16V
C090	1-123-332-00	ELECT	47MF	20%	16V
C091	1-123-356-00	ELECT	10MF	20%	16V
C092	1-102-958-00	CERAMIC	20PF	5%	50V
C093	1-130-485-00	MYLAR	0.015MF	5%	50V
C095	1-130-485-00	MYLAR	0.015MF	5%	50V
C096	1-130-494-11	MYLAR	0.082MF	5%	50V
C098	1-130-475-00	MYLAR	0.0022MF	5%	50V
C099	1-102-936-00	CERAMIC	3PF	0.25PF	50V
C100	1-130-469-00	MYLAR	680PF	5%	50V
C101	1-108-590-00	MYLAR	0.03MF	5%	50V
C102	1-131-383-00	TANTALUM	10MF	10%	6.3V
C103	1-131-347-00	TANTALUM	1MF	20%	16V
C105	1-123-307-00	ELECT	100MF	20%	10V

Ref.No	Part NO.	Description			Remark
C106	1-161-013-00	CERAMIC	0.01MF	10%	25V
C107	1-130-497-00	MYLAR	0.15MF	5%	50V
C109	1-106-186-00	MYLAR	0.0039MF	5%	50V
C110	1-106-182-00	MYLAR	0.0027MF	5%	50V
C111	1-106-178-00	MYLAR	0.0018MF	5%	50V
C115	1-123-356-00	ELECT	10MF	20%	16V
C116	1-123-307-00	ELECT	100MF	20%	10V
C117	1-123-332-00	ELECT	47MF	20%	16V
C118	1-123-332-00	ELECT	47MF	20%	16V
C119	1-102-958-00	CERAMIC	20PF	5%	50V
C120	1-130-485-00	MYLAR	0.015MF	5%	50V
C121	1-102-936-00	CERAMIC	3PF	0.25PF	50V
C122	1-130-469-00	MYLAR	680PF	5%	50V
C123	1-102-936-00	CERAMIC	3PF	0.25PF	50V
C124	1-130-497-00	MYLAR	0.15MF	5%	50V
C125	1-131-383-00	TANTALUM	10MF	10%	6.3V
C126	1-131-347-00	TANTALUM	1MF	20%	16V
C127	1-108-590-00	MYLAR	0.03MF	5%	50V
C128	1-130-475-00	MYLAR	0.0022MF	5%	50V
C130	1-130-494-11	MYLAR	0.082MF	5%	50V
C131	1-130-485-00	MYLAR	0.015MF	5%	50V
C132	1-123-356-00	ELECT	10MF	20%	16V
C133	1-161-013-00	CERAMIC	0.01MF	10%	25V
C134	1-123-330-00	ELECT	22MF	20%	16V
C143	1-123-332-00	ELECT	47MF	20%	16V
C144	1-123-330-00	ELECT	22MF	20%	16V
C146	1-123-332-00	ELECT	47MF	20%	16V
C147	1-123-330-00	ELECT	22MF	20%	16V
C150	1-123-332-00	ELECT	47MF	20%	16V
C151	1-123-381-00	ELECT	2.2MF	20%	50V
C152	1-102-973-00	CERAMIC	100PF	5%	50V
C153	1-123-332-00	ELECT	47MF	20%	16V
C154	1-123-381-00	ELECT	2.2MF	20%	50V
C155	1-102-973-00	CERAMIC	100PF	5%	50V
C156	1-123-330-00	ELECT	22MF	20%	16V
C157	1-123-330-00	ELECT	22MF	20%	16V
C158	1-123-330-00	ELECT	22MF	20%	16V
C159	1-123-318-00	ELECT	33MF	20%	16V
C160	1-123-332-00	ELECT	47MF	20%	16V
C161	1-123-330-00	ELECT	22MF	20%	16V
C162	1-123-318-00	ELECT	33MF	20%	16V
C163	1-123-356-00	ELECT	10MF	20%	16V
C164	1-123-356-00	ELECT	10MF	20%	16V
C165	1-123-330-00	ELECT	22MF	20%	16V
C166	1-123-356-00	ELECT	10MF	20%	16V
C167	1-123-380-00	ELECT	1MF	20%	50V
C168	1-123-356-00	ELECT	10MF	20%	16V
C169	1-123-330-00	ELECT	22MF	20%	16V
C170	1-123-380-00	ELECT	1MF	20%	50V
C171	1-161-025-00	CERAMIC	0.1MF	10%	25V
C173	1-161-013-00	CERAMIC	0.01MF	10%	25V
C175	1-123-332-00	ELECT	47MF	20%	16V
C176	1-102-976-00	CERAMIC	180PF	5%	50V

When indicating parts by reference number, please include the board name.

Ref.No	Part NO.	Description			Remark
C177	1-161-013-00	CERAMIC	0.01MF	10%	25V
C178	1-102-522-00	CERAMIC	51PF	5%	50V
C179	1-102-978-00	CERAMIC	220PF	5%	50V
C180	1-102-978-00	CERAMIC	220PF	5%	50V
C181	1-161-013-00	CERAMIC	0.01MF	10%	25V
C182	1-123-332-00	ELECT	47MF	20%	16V
C183	1-123-332-00	ELECT	47MF	20%	16V
C184	1-102-529-00	CERAMIC	100PF	5%	50V
C185	1-123-332-00	ELECT	47MF	20%	16V
C186	1-123-332-00	ELECT	47MF	20%	16V
C187	1-161-025-00	CERAMIC	0.1MF	10%	25V
C189	1-161-025-00	CERAMIC	0.1MF	10%	25V
C190	1-123-332-00	ELECT	47MF	20%	16V
C191	1-161-025-00	CERAMIC	0.1MF	10%	25V
C192	1-123-332-00	ELECT	47MF	20%	16V
C193	1-102-529-00	CERAMIC	100PF	5%	50V
C194	1-123-332-00	ELECT	47MF	20%	16V
C195	1-123-332-00	ELECT	47MF	20%	16V
C196	1-123-332-00	ELECT	47MF	20%	16V
C197	1-102-625-61	CERAMIC	100PF	5%	50V
C198	1-161-013-00	CERAMIC	0.01MF	10%	25V
C199	1-102-517-00	CERAMIC	30PF	5%	50V
C200	1-102-531-00	CERAMIC	150PF	5%	50V
C201	1-102-531-00	CERAMIC	150PF	5%	50V
C202	1-161-013-00	CERAMIC	0.01MF	10%	25V
C203	1-161-013-00	CERAMIC	0.01MF	10%	25V
C209	1-123-356-00	ELECT	10MF	20%	16V
C211	1-161-025-00	CERAMIC	0.1MF	10%	25V
C213	1-123-332-00	ELECT	47MF	20%	16V
C216	1-123-381-00	ELECT	2.2MF	20%	50V
C217	1-123-381-00	ELECT	2.2MF	20%	50V
C221	1-123-330-00	ELECT	22MF	20%	16V
C222	1-123-330-00	ELECT	22MF	20%	16V
C223	1-102-936-00	CERAMIC	3PF	0.25PF	50V
C224	1-123-380-00	ELECT	1MF	20%	50V
C225	1-161-013-00	CERAMIC	0.01MF	10%	25V
C226	1-161-013-00	CERAMIC	0.01MF	10%	25V
C227	1-161-013-00	CERAMIC	0.01MF	10%	25V
C229	1-130-471-00	MYLAR	0.001MF	5%	50V
C232	1-130-471-00	MYLAR	0.001MF	5%	50V
C235	1-161-013-00	CERAMIC	0.01MF	10%	25V
C236	1-130-491-00	MYLAR	0.047MF	5%	50V
C237	1-130-491-00	MYLAR	0.047MF	5%	50V
C238	1-123-330-00	ELECT	22MF	20%	16V
C240	1-161-025-00	CERAMIC	0.1MF	10%	25V
C241	1-123-356-00	ELECT	10MF	20%	16V
C501	1-124-233-00	ELECT	10MF	20%	16V
C701	1-123-356-00	ELECT	10MF	20%	16V
C702	1-123-356-00	ELECT	10MF	20%	16V
C704	1-123-322-00	ELECT	330MF	20%	16V
C706	1-124-231-00	ELECT	4.7MF	20%	16V
C709	1-123-381-00	ELECT	2.2MF	20%	50V
C710	1-130-469-00	MYLAR	680PF	5%	50V

Ref.No	Part NO.	Description			Remark
C711	1-130-469-00	MYLAR	680PF	5%	50V
C712	1-123-332-00	ELECT	47MF	20%	16V
C713	1-123-332-00	ELECT	47MF	20%	16V
C714	1-130-469-00	MYLAR	680PF	5%	50V
C715	1-130-469-00	MYLAR	680PF	5%	50V
C722	1-124-231-00	ELECT	4.7MF	20%	16V
C724	1-123-380-00	ELECT	1MF	20%	50V
C726	1-161-039-00	CERAMIC	0.001MF	10%	25V
C728	1-102-980-00	CERAMIC	270PF	5%	50V
C731	1-123-332-00	ELECT	47MF	20%	16V
C732	1-123-332-00	ELECT	47MF	20%	16V
C733	1-161-013-00	CERAMIC	0.01MF	10%	25V
C734	1-124-168-00	ELECT	100MF	20%	16V
C735	1-123-381-00	ELECT	2.2MF	20%	50V
C736	1-123-381-00	ELECT	2.2MF	20%	50V
C738	1-124-233-00	ELECT	10MF	20%	16V
C739	1-161-057-00	CERAMIC	0.033MF	10%	25V
C741	1-124-475-11	ELECT	470MF	20%	16V
C742	1-123-380-00	ELECT	1MF	20%	50V
C743	1-123-380-00	ELECT	1MF	20%	50V
C750	1-102-973-00	CERAMIC	100PF	5%	50V
C751	1-161-013-00	CERAMIC	0.01MF	10%	25V
C752	1-161-013-00	CERAMIC	0.01MF	10%	25V
C753	1-161-025-00	CERAMIC	0.1MF	10%	25V
C754	1-161-025-00	CERAMIC	0.1MF	10%	25V
C755	1-130-483-00	MYLAR	0.01MF	5%	50V
C756	1-130-475-00	MYLAR	0.0022MF	5%	50V
C757	1-130-495-00	MYLAR	0.1MF	5%	50V
C758	1-161-057-00	CERAMIC	0.033MF	10%	25V
C759	1-161-025-00	CERAMIC	0.1MF	10%	25V
C760	1-161-025-00	CERAMIC	0.1MF	10%	25V

CONNECTOR

CN001♣	1-560-892-00	PIN, CONNECTOR 4P
CN002♣	1-560-891-00	PIN, CONNECTOR 3P
CN003♣	1-560-898-00	PIN, CONNECTOR 10P
CN004♣	1-560-896-00	PIN, CONNECTOR 8P
CN005♣	1-560-893-00	PIN, CONNECTOR 5P
CN006♣	1-560-892-00	PIN, CONNECTOR 4P
CN007♣	1-560-892-00	PIN, CONNECTOR 4P
CN008♣	1-560-897-00	PIN, CONNECTOR 9P
CN009♣	1-560-891-00	PIN, CONNECTOR 3P
CN011♣	1-560-900-00	PIN, CONNECTOR 12P
CN012♣	1-560-890-00	PIN, CONNECTOR 2P

DIODE

D007	8-719-911-19	DIODE 1SS119
D008	8-719-911-19	DIODE 1SS119
D011	8-719-000-12	DIODE MC931
D013	8-719-000-12	DIODE MC931
D017	=>8-719-911-19	DIODE 1SS119
D019	=>8-719-911-19	DIODE 1SS119
D025	8-719-100-34	DIODE RD5.6E-B1

When indicating parts by reference number, please include the board name.

AF-3

Ref.No	Part NO.	Description	Remark
D027	=>8-719-911-19	DIODE 1SS119	
D504	8-719-911-19	DIODE 1SS119	
D505	8-719-156-07	DIODE RD5.6E-B	
D508	8-719-162-07	DIODE RD6.2E-B	
D509	8-719-100-36	DIODE RD5.6E-B3	
D511	8-719-100-36	DIODE RD5.6E-B3	
D514	8-719-911-19	DIODE 1SS119	
D515	8-719-911-19	DIODE 1SS119	
D516	8-719-911-19	DIODE 1SS119	
D517	8-719-911-19	DIODE 1SS119	
D521	8-719-911-19	DIODE 1SS119	
D522	8-719-911-19	DIODE 1SS119	
D523	8-719-911-19	DIODE 1SS119	
D524	8-719-812-33	DIODE TLG123A	
D525	8-719-175-07	DIODE RD7.5E-B	
D527	8-719-911-19	DIODE 1SS119	
D528	8-719-911-19	DIODE 1SS119	
D529	8-719-911-19	DIODE 1SS119	
D530	8-719-911-19	DIODE 1SS119	
D531	8-719-911-19	DIODE 1SS119	
D532	8-719-911-19	DIODE 1SS119	
D850	8-719-911-19	DIODE 1SS119	
		IC	
IC001	8-759-324-12	IC HA12412	
IC002	8-759-324-12	IC HA12412	
IC003	8-759-101-67	IC UPC1167C2	
IC004	8-759-101-67	IC UPC1167C2	
IC005	8-759-103-93	IC UPC393C	
IC006	8-759-990-82	IC TL082CP	
IC007	8-759-990-82	IC TL082CP	
IC008	8-759-240-66	IC TC4066BP	
IC009	8-759-240-66	IC TC4066BP	
IC010	8-759-400-04	IC AN6120	
IC011	8-759-400-04	IC AN6120	
IC012	8-752-009-70	IC CX20097	
IC013	8-759-700-62	IC NJM4562D	
IC014	8-759-240-52	IC TC4052BP	
IC015	8-759-700-62	IC NJM4562D	
IC016	8-752-006-10	IC CX20061	
IC017	8-752-006-10	IC CX20061	
IC018	8-759-240-93	IC TC4093BP	
IC019	8-759-240-01	IC TC4001BP	
IC020	8-759-913-02	IC MB88201-167G	
IC021	8-752-006-10	IC CX20061	
IC022	8-752-006-10	IC CX20061	
		COIL	
L001	1-408-421-00	MICRO INDUCTOR 100UH	
L002	1-408-413-00	MICRO INDUCTOR 22UH	

Ref.No	Part NO.	Description	Remark
L003	1-407-163-XX	MICRO INDUCTOR 33UH	
L004	1-407-163-XX	MICRO INDUCTOR 33UH	
L005	1-407-163-XX	MICRO INDUCTOR 33UH	
L007	1-408-415-00	MICRO INDUCTOR 33UH	
L008	1-408-418-00	MICRO INDUCTOR 56UH	
L010	1-408-413-00	MICRO INDUCTOR 22UH	
L011	1-408-416-00	MICRO INDUCTOR 39UH	
L012	1-407-163-XX	MICRO INDUCTOR 33UH	
L013	1-408-413-00	MICRO INDUCTOR 22UH	
L014	1-408-413-00	MICRO INDUCTOR 22UH	
L015	1-408-413-00	MICRO INDUCTOR 22UH	
L016	1-408-413-00	MICRO INDUCTOR 22UH	
L020	1-408-417-00	MICRO INDUCTOR 47UH	
L021	1-408-417-00	MICRO INDUCTOR 47UH	
L022	1-408-417-00	MICRO INDUCTOR 47UH	
L026	1-408-421-00	MICRO INDUCTOR 100UH	
L027	1-408-421-00	MICRO INDUCTOR 100UH	
L028	1-408-429-00	MICRO INDUCTOR 470UH	
		L.P.F	
LPF001	1-235-365-11	L.P.F	
LPF002	1-235-365-11	L.P.F	
		IC LINK	
PS001⚠	1-532-605-11	LINK, IC ICP-N10	
		TRANSISTOR	
Q001 ⚠	8-729-113-33	TRANSISTOR 2SB733-4	
Q002	8-729-900-89	TRANSISTOR DTC144ES	
Q003	=>8-729-204-83	TRANSISTOR 2SA1048-GR	
Q004	=>8-729-245-83	TRANSISTOR 2SC2458	
Q007	8-729-177-43	TRANSISTOR 2SD774	
Q008	8-729-603-30	TRANSISTOR 2SC403SP-3	
Q009	8-729-603-30	TRANSISTOR 2SC403SP-3	
Q010	8-729-106-07	TRANSISTOR 2SK514-H	
Q012	8-729-900-37	TRANSISTOR DTC124EF	
Q015	8-729-106-07	TRANSISTOR 2SK514-H	
Q017	8-729-900-89	TRANSISTOR DTC144ES	
Q019	=>8-729-245-83	TRANSISTOR 2SC2458	
Q020	=>8-729-245-83	TRANSISTOR 2SC2458	
Q021	=>8-729-245-83	TRANSISTOR 2SC2458	
Q022	=>8-729-245-83	TRANSISTOR 2SC2458	
Q023	=>8-729-245-83	TRANSISTOR 2SC2458	
Q024	=>8-729-245-83	TRANSISTOR 2SC2458	
Q030	=>8-729-245-83	TRANSISTOR 2SC2458	
Q031	=>8-729-245-83	TRANSISTOR 2SC2458	
Q032	8-729-965-22	TRANSISTOR 2SC1652	
Q034	8-729-965-22	TRANSISTOR 2SC1652	
Q035	8-729-965-22	TRANSISTOR 2SC1652	
Q036	8-729-965-22	TRANSISTOR 2SC1652	
Q037	=>8-729-245-83	TRANSISTOR 2SC2458	
Q038	=>8-729-245-83	TRANSISTOR 2SC2458	

The components identified by shading and mark ⚠ are critical for safety. Replace only with part number specified.

When indicating parts by reference number, please include the board name.

Ref.No	Part NO.	Description	Remark
Q044	8-729-965-22	TRANSISTOR 2SC1652	
Q046	=>8-729-245-83	TRANSISTOR 2SC2458	
Q049	8-729-900-89	TRANSISTOR DTC144ES	
Q701	=>8-729-245-83	TRANSISTOR 2SC2458	
Q703	=>8-729-245-83	TRANSISTOR 2SC2458	
Q704	=>8-729-245-83	TRANSISTOR 2SC2458	
Q705	=>8-729-245-83	TRANSISTOR 2SC2458	
Q706	8-729-965-22	TRANSISTOR 2SC1652	
Q707	8-729-993-72	TRANSISTOR 2SA937	
Q708	=>8-729-245-83	TRANSISTOR 2SC2458	
Q709	=>8-729-204-83	TRANSISTOR 2SA1048-GR	
Q710	=>8-729-204-83	TRANSISTOR 2SA1048-GR	
Q715	=>8-729-245-83	TRANSISTOR 2SC2458	
Q716	=>8-729-245-83	TRANSISTOR 2SC2458	
Q720	8-729-117-54	TRANSISTOR 2SA1175	
Q721	=>8-729-245-83	TRANSISTOR 2SC2458	
Q722	=>8-729-245-83	TRANSISTOR 2SC2458	
Q723	8-729-900-33	TRANSISTOR DTC144EF	
Q724	=>8-729-245-83	TRANSISTOR 2SC2458	
Q725	8-729-117-54	TRANSISTOR 2SA1175	
Q728	=>8-729-245-83	TRANSISTOR 2SC2458	
Q729	=>8-729-245-83	TRANSISTOR 2SC2458	

RESISTOR

Ref.No	Part NO.	Description				Remark
R001	1-247-807-00	CARBON	100	5%	1/6W	
R002	1-247-847-00	CARBON	4.7K	5%	1/6W	
R003	1-247-831-00	CARBON	1K	5%	1/6W	
R006	1-247-823-00	CARBON	470	5%	1/6W	
R007	1-247-873-00	CARBON	56K	5%	1/6W	
R008	1-247-855-00	CARBON	10K	5%	1/6W	
R012	1-247-867-00	CARBON	33K	5%	1/6W	
R013	1-247-855-00	CARBON	10K	5%	1/6W	
R014	1-247-855-00	CARBON	10K	5%	1/6W	
R026	1-247-823-00	CARBON	470	5%	1/6W	
R027	1-247-861-00	CARBON	18K	5%	1/6W	
R028	1-247-831-00	CARBON	1K	5%	1/6W	
R029	1-247-825-00	CARBON	560	5%	1/6W	
R030	1-247-815-00	CARBON	220	5%	1/6W	
R031	1-247-822-00	CARBON	430	5%	1/6W	
R033	1-247-809-00	CARBON	120	5%	1/6W	
R034	1-247-819-00	CARBON	330	5%	1/6W	
R035	⚠ 1-212-853-00	FUSIBLE	6.8	5%	1/4W	F
R036	1-247-855-00	CARBON	10K	5%	1/6W	
R037	1-247-823-00	CARBON	470	5%	1/6W	
R038	1-247-855-00	CARBON	10K	5%	1/6W	
R039	1-247-855-00	CARBON	10K	5%	1/6W	
R040	1-247-855-00	CARBON	10K	5%	1/6W	
R042	1-247-855-00	CARBON	10K	5%	1/6W	
R043	1-247-855-00	CARBON	10K	5%	1/6W	
R044	1-247-823-00	CARBON	470	5%	1/6W	
R045	1-247-861-00	CARBON	18K	5%	1/6W	
R046	1-247-831-00	CARBON	1K	5%	1/6W	
R047	1-247-825-00	CARBON	560	5%	1/6W	
R048	1-247-847-00	CARBON	4.7K	5%	1/6W	
R049	1-247-815-00	CARBON	220	5%	1/6W	
R050	1-247-822-00	CARBON	430	5%	1/6W	
R052	1-247-809-00	CARBON	120	5%	1/6W	
R054	1-247-855-00	CARBON	10K	5%	1/6W	
R055	1-247-855-00	CARBON	10K	5%	1/6W	
R056	1-247-855-00	CARBON	10K	5%	1/6W	
R057	1-247-855-00	CARBON	10K	5%	1/6W	
R061	1-247-831-00	CARBON	1K	5%	1/6W	
R069	1-247-839-00	CARBON	2.2K	5%	1/6W	
R071	1-247-855-00	CARBON	10K	5%	1/6W	
R072	1-247-879-00	CARBON	100K	5%	1/6W	
R073	1-247-851-00	CARBON	6.8K	5%	1/6W	
R083	1-247-822-00	CARBON	430	5%	1/6W	
R085	1-247-814-00	CARBON	200	5%	1/6W	
R087	1-247-855-00	CARBON	10K	5%	1/6W	
R088	1-247-855-00	CARBON	10K	5%	1/6W	
R089	1-247-855-00	CARBON	10K	5%	1/6W	
R090	1-247-823-00	CARBON	470	5%	1/6W	
R091	1-247-855-00	CARBON	10K	5%	1/6W	
R093	1-247-831-00	CARBON	1K	5%	1/6W	
R105	1-247-839-00	CARBON	2.2K	5%	1/6W	
R110	1-247-839-00	CARBON	2.2K	5%	1/6W	
R115	1-247-822-00	CARBON	430	5%	1/6W	
R116	1-247-814-00	CARBON	200	5%	1/6W	
R117	1-247-855-00	CARBON	10K	5%	1/6W	
R118	1-247-855-00	CARBON	10K	5%	1/6W	
R119	1-247-855-00	CARBON	10K	5%	1/6W	
R120	1-247-855-00	CARBON	10K	5%	1/6W	
R122	1-247-848-00	CARBON	5.1K	5%	1/6W	
R123	1-247-863-00	CARBON	22K	5%	1/6W	
R124	1-247-863-00	CARBON	22K	5%	1/6W	
R125	1-247-863-00	CARBON	22K	5%	1/6W	
R126	1-247-839-00	CARBON	2.2K	5%	1/6W	
R127	1-247-863-00	CARBON	22K	5%	1/6W	
R128	1-247-863-00	CARBON	22K	5%	1/6W	
R129	1-247-863-00	CARBON	22K	5%	1/6W	
R130	1-247-839-00	CARBON	2.2K	5%	1/6W	
R132	1-247-855-00	CARBON	10K	5%	1/6W	
R133	1-247-859-00	CARBON	15K	5%	1/6W	
R134	1-247-840-00	CARBON	2.4K	5%	1/6W	
R135	1-247-824-00	CARBON	510	5%	1/6W	
R136	1-247-855-00	CARBON	10K	5%	1/6W	
R137	1-247-855-00	CARBON	10K	5%	1/6W	
R138	1-247-822-00	CARBON	430	5%	1/6W	
R139	1-247-842-00	CARBON	3K	5%	1/6W	
R140	1-247-858-00	CARBON	13K	5%	1/6W	
R141	1-247-858-00	CARBON	13K	5%	1/6W	

The components identified by shading and mark ⚠ are critical for safety. Replace only with part number specified.

When indicating parts by reference number, please include the board name.

AF-3

Ref.No	Part NO.	Description				Remark
R142	1-247-838-00	CARBON	2K	5%	1/6W	
R143	1-247-842-00	CARBON	3K	5%	1/6W	
R144	1-247-895-00	CARBON	470K	5%	1/6W	
R146	1-247-853-00	CARBON	8.2K	5%	1/6W	
R147	1-247-865-00	CARBON	27K	5%	1/6W	
R148	1-247-848-00	CARBON	5.1K	5%	1/6W	
R149	1-247-828-00	CARBON	750	5%	1/6W	
R150	1-247-814-00	CARBON	200	5%	1/6W	
R151	1-247-851-00	CARBON	6.8K	5%	1/6W	
R152	1-247-847-00	CARBON	4.7K	5%	1/6W	
R157	1-247-855-00	CARBON	10K	5%	1/6W	
R158	1-247-859-00	CARBON	15K	5%	1/6W	
R159	1-247-840-00	CARBON	2.4K	5%	1/6W	
R160	1-247-824-00	CARBON	510	5%	1/6W	
R161	1-247-855-00	CARBON	10K	5%	1/6W	
R162	1-247-843-00	CARBON	3.3K	5%	1/6W	
R163	1-247-855-00	CARBON	10K	5%	1/6W	
R164	1-247-855-00	CARBON	10K	5%	1/6W	
R165	1-247-842-00	CARBON	3K	5%	1/6W	
R166	1-247-822-00	CARBON	430	5%	1/6W	
R167	1-247-858-00	CARBON	13K	5%	1/6W	
R168	1-247-838-00	CARBON	2K	5%	1/6W	
R169	1-247-858-00	CARBON	13K	5%	1/6W	
R170	1-247-842-00	CARBON	3K	5%	1/6W	
R172	1-247-865-00	CARBON	27K	5%	1/6W	
R173	1-247-895-00	CARBON	470K	5%	1/6W	
R174	1-247-853-00	CARBON	8.2K	5%	1/6W	
R175	1-247-836-00	CARBON	1.6K	5%	1/6W	
R176	1-247-814-00	CARBON	200	5%	1/6W	
R177	1-247-848-00	CARBON	5.1K	5%	1/6W	
R178	1-247-828-00	CARBON	750	5%	1/6W	
R179 ⚠	1-247-815-00	CARBON	220	5%	1/6W	
R180	1-215-465-00	METAL	68K	1%	1/6W	
R181	1-215-446-00	METAL	11K	1%	1/6W	
R183	1-215-462-00	METAL	51K	1%	1/6W	
R184	1-215-462-00	METAL	51K	1%	1/6W	
R185	1-247-871-00	CARBON	47K	5%	1/6W	
R190	1-215-446-00	METAL	11K	1%	1/6W	
R191	1-215-465-00	METAL	68K	1%	1/6W	
R194	1-247-872-00	CARBON	51K	5%	1/6W	
R200	1-247-872-00	CARBON	51K	5%	1/6W	
R205	1-247-855-00	CARBON	10K	5%	1/6W	
R206	1-247-859-00	CARBON	15K	5%	1/6W	
R217 ⚠	1-247-815-00	CARBON	220	5%	1/6W	
R218	1-247-871-00	CARBON	47K	5%	1/6W	
R220	1-247-875-00	CARBON	68K	5%	1/6W	
R221	1-247-850-00	CARBON	6.2K	5%	1/6W	
R222	1-247-863-00	CARBON	22K	5%	1/6W	
R223	1-247-831-00	CARBON	1K	5%	1/6W	
R224	1-247-887-00	CARBON	220K	5%	1/6W	
R225	1-247-842-00	CARBON	3K	5%	1/6W	
R226	1-247-879-00	CARBON	100K	5%	1/6W	
R227	1-247-855-00	CARBON	10K	5%	1/6W	

Ref.No	Part NO.	Description				Remark
R228	1-247-879-00	CARBON	100K	5%	1/6W	
R229	1-247-831-00	CARBON	1K	5%	1/6W	
R230	1-247-887-00	CARBON	220K	5%	1/6W	
R231	1-247-842-00	CARBON	3K	5%	1/6W	
R232	1-247-848-00	CARBON	5.1K	5%	1/6W	
R233	1-247-848-00	CARBON	5.1K	5%	1/6W	
R234 ⚠	1-247-815-00	CARBON	220	5%	1/6W	
R235	1-247-871-00	CARBON	47K	5%	1/6W	
R236	1-247-871-00	CARBON	47K	5%	1/6W	
R237	1-247-839-00	CARBON	2.2K	5%	1/6W	
R239	1-247-863-00	CARBON	22K	5%	1/6W	
R240	1-247-871-00	CARBON	47K	5%	1/6W	
R241	1-247-875-00	CARBON	68K	5%	1/6W	
R243	1-247-850-00	CARBON	6.2K	5%	1/6W	
R244	1-247-855-00	CARBON	10K	5%	1/6W	
R245	1-247-855-00	CARBON	10K	5%	1/6W	
R246	1-247-855-00	CARBON	10K	5%	1/6W	
R247	1-247-855-00	CARBON	10K	5%	1/6W	
R248	1-247-863-00	CARBON	22K	5%	1/6W	
R249	1-247-855-00	CARBON	10K	5%	1/6W	
R253	1-247-855-00	CARBON	10K	5%	1/6W	
R255	1-247-867-00	CARBON	33K	5%	1/6W	
R256	1-247-863-00	CARBON	22K	5%	1/6W	
R262	1-247-851-00	CARBON	6.8K	5%	1/6W	
R263	1-247-823-00	CARBON	470	5%	1/6W	
R264	1-247-861-00	CARBON	18K	5%	1/6W	
R265	1-247-861-00	CARBON	18K	5%	1/6W	
R266	1-247-807-00	CARBON	100	5%	1/6W	
R267	1-215-442-00	METAL	7.5K	1%	1/6W	
R268	1-247-843-00	CARBON	3.3K	5%	1/6W	
R269	1-247-855-00	CARBON	10K	5%	1/6W	
R270	1-247-855-00	CARBON	10K	5%	1/6W	
R271	1-247-875-00	CARBON	68K	5%	1/6W	
R272	1-247-871-00	CARBON	47K	5%	1/6W	
R273	1-247-871-00	CARBON	47K	5%	1/6W	
R275	1-247-851-00	CARBON	6.8K	5%	1/6W	
R276	1-247-823-00	CARBON	470	5%	1/6W	
R277	1-247-861-00	CARBON	18K	5%	1/6W	
R278	1-247-861-00	CARBON	18K	5%	1/6W	
R279	1-247-807-00	CARBON	100	5%	1/6W	
R280	1-215-421-00	METAL	1K	1%	1/6W	
R281	1-247-844-00	CARBON	3.6K	5%	1/6W	
R282	1-247-855-00	CARBON	10K	5%	1/6W	
R283	1-247-855-00	CARBON	10K	5%	1/6W	
R284	1-247-869-00	CARBON	39K	5%	1/6W	
R285	1-247-871-00	CARBON	47K	5%	1/6W	
R286	1-247-871-00	CARBON	47K	5%	1/6W	
R288	1-215-453-00	METAL	22K	1%	1/6W	
R289	1-215-453-00	METAL	22K	1%	1/6W	
R290	1-247-807-00	CARBON	100	5%	1/6W	
R291	1-247-831-00	CARBON	1K	5%	1/6W	
R293	1-247-867-00	CARBON	33K	5%	1/6W	
R296	1-247-867-00	CARBON	33K	5%	1/6W	

The components identified by shading and mark ⚠ are critical for safety. Replace only with part number specified.

When indicating parts by reference number, please include the board name.

Ref.No	Part NO.	Description				Remark
R297	1-247-848-00	CARBON	5.1K	5%	1/6W	
R298	1-247-863-00	CARBON	22K	5%	1/6W	
R299	1-247-863-00	CARBON	22K	5%	1/6W	
R300	1-247-863-00	CARBON	22K	5%	1/6W	
R301	1-247-855-00	CARBON	10K	5%	1/6W	
R302	1-247-855-00	CARBON	10K	5%	1/6W	
R303	1-247-871-00	CARBON	47K	5%	1/6W	
R304	1-247-855-00	CARBON	10K	5%	1/6W	
R308	1-247-863-00	CARBON	22K	5%	1/6W	
R310	1-247-847-00	CARBON	4.7K	5%	1/6W	
R311	1-247-855-00	CARBON	10K	5%	1/6W	
R312	1-247-843-00	CARBON	3.3K	5%	1/6W	
R313	1-247-855-00	CARBON	10K	5%	1/6W	
R322	1-247-879-00	CARBON	100K	5%	1/6W	
R323	1-247-839-00	CARBON	2.2K	5%	1/6W	
R324	1-247-871-00	CARBON	47K	5%	1/6W	
R325	1-247-879-00	CARBON	100K	5%	1/6W	
R326	1-247-831-00	CARBON	1K	5%	1/6W	
R327	1-247-859-00	CARBON	15K	5%	1/6W	
R330	1-247-831-00	CARBON	1K	5%	1/6W	
R332	1-247-862-00	CARBON	20K	5%	1/6W	
R338	1-247-862-00	CARBON	20K	5%	1/6W	
R343	1-247-807-00	CARBON	100	5%	1/6W	
R344	1-247-807-00	CARBON	100	5%	1/6W	
R345	1-247-820-00	CARBON	360	5%	1/6W	
R346	1-247-820-00	CARBON	360	5%	1/6W	
R351	1-247-843-00	CARBON	3.3K	5%	1/6W	
R352	1-247-857-00	CARBON	12K	5%	1/6W	
R601	1-247-871-00	CARBON	47K	5%	1/6W	
R701	1-247-855-00	CARBON	10K	5%	1/6W	
R702	1-247-855-00	CARBON	10K	5%	1/6W	
R703	1-247-847-00	CARBON	4.7K	5%	1/6W	
R706	1-247-843-00	CARBON	3.3K	5%	1/6W	
R707	1-247-847-00	CARBON	4.7K	5%	1/6W	
R708	1-247-843-00	CARBON	3.3K	5%	1/6W	
R712	1-247-867-00	CARBON	33K	5%	1/6W	
R713	1-247-855-00	CARBON	10K	5%	1/6W	
R714	1-247-867-00	CARBON	33K	5%	1/6W	
R715	1-247-867-00	CARBON	33K	5%	1/6W	
R716	1-247-855-00	CARBON	10K	5%	1/6W	
R718	1-247-849-00	CARBON	5.6K	5%	1/6W	
R719	1-247-849-00	CARBON	5.6K	5%	1/6W	
R720	1-247-849-00	CARBON	5.6K	5%	1/6W	
R721	1-247-849-00	CARBON	5.6K	5%	1/6W	
R722	1-247-867-00	CARBON	33K	5%	1/6W	
R724	1-247-867-00	CARBON	33K	5%	1/6W	
R725	1-247-855-00	CARBON	10K	5%	1/6W	
R726	1-247-867-00	CARBON	33K	5%	1/6W	
R727	1-247-867-00	CARBON	33K	5%	1/6W	
R728	1-247-855-00	CARBON	10K	5%	1/6W	
R729	1-247-839-00	CARBON	2.2K	5%	1/6W	
R730	1-247-813-00	CARBON	180	5%	1/6W	

Ref.No	Part NO.	Description				Remark
R731	1-247-813-00	CARBON	180	5%	1/6W	
R732	1-247-867-00	CARBON	33K	5%	1/6W	
R734	1-247-812-00	CARBON	160	5%	1/6W	
R735	1-247-812-00	CARBON	160	5%	1/6W	
R736	1-247-867-00	CARBON	33K	5%	1/6W	
R737	1-247-821-00	CARBON	390	5%	1/6W	
R739	1-247-863-00	CARBON	22K	5%	1/6W	
R740	1-247-863-00	CARBON	22K	5%	1/6W	
R741	1-247-843-00	CARBON	3.3K	5%	1/6W	
R746	1-247-863-00	CARBON	22K	5%	1/6W	
R748	1-247-843-00	CARBON	3.3K	5%	1/6W	
R757	1-247-825-00	CARBON	560	5%	1/6W	
R759	1-247-823-00	CARBON	470	5%	1/6W	
R779	1-247-855-00	CARBON	10K	5%	1/6W	
R780	1-247-825-00	CARBON	560	5%	1/6W	
R781	1-247-825-00	CARBON	560	5%	1/6W	
R782	1-247-867-00	CARBON	33K	5%	1/6W	
R783	1-247-867-00	CARBON	33K	5%	1/6W	
R784	1-247-825-00	CARBON	560	5%	1/6W	
R785	1-247-825-00	CARBON	560	5%	1/6W	
R787	1-247-855-00	CARBON	10K	5%	1/6W	
R788 ⚠	1-247-831-00	CARBON	1K	5%	1/6W	
R789	1-247-896-00	CARBON	510K	5%	1/6W	
R790	1-247-855-00	CARBON	10K	5%	1/6W	
R793	1-247-855-00	CARBON	10K	5%	1/6W	
R794	1-247-847-00	CARBON	4.7K	5%	1/6W	
R795	1-247-847-00	CARBON	4.7K	5%	1/6W	
R796	1-247-839-00	CARBON	2.2K	5%	1/6W	
R797	1-247-839-00	CARBON	2.2K	5%	1/6W	
R798	1-247-803-00	CARBON	68	5%	1/6W	
R799	1-247-831-00	CARBON	1K	5%	1/6W	
R800	1-247-831-00	CARBON	1K	5%	1/6W	
R801 ⚠	1-247-815-00	CARBON	220	5%	1/6W	
R802 ⚠	1-247-815-00	CARBON	220	5%	1/6W	
R803	1-247-875-00	CARBON	68K	5%	1/6W	
R804	1-247-879-00	CARBON	100K	5%	1/6W	
R805	1-247-879-00	CARBON	100K	5%	1/6W	
R806	1-247-855-00	CARBON	10K	5%	1/6W	
R807	1-247-815-00	CARBON	220	5%	1/6W	
R808	1-247-815-00	CARBON	220	5%	1/6W	
R810	1-247-873-00	CARBON	56K	5%	1/6W	
R811	1-247-855-00	CARBON	10K	5%	1/6W	
R812	1-247-855-00	CARBON	10K	5%	1/6W	
R815	1-247-855-00	CARBON	10K	5%	1/6W	
R816	1-247-895-00	CARBON	470K	5%	1/6W	
R817	1-247-879-00	CARBON	100K	5%	1/6W	
R818	1-247-895-00	CARBON	470K	5%	1/6W	
R819	1-247-895-00	CARBON	470K	5%	1/6W	
R820	1-247-895-00	CARBON	470K	5%	1/6W	
R821	1-247-895-00	CARBON	470K	5%	1/6W	
R828	1-247-887-00	CARBON	220K	5%	1/6W	
R829	1-247-823-00	CARBON	470	5%	1/6W	
R830	1-247-819-00	CARBON	330	5%	1/6W	

The components identified by shading and mark ⚠ are critical for safety. Replace only with part number specified.

When indicating parts by reference number, please include the board name.

AF-3 | AM-5

Ref.No	Part NO.	Description				Remark
R831	1-247-831-00	CARBON	1K	5%	1/6W	
R832	1-247-871-00	CARBON	47K	5%	1/6W	
R833	1-247-867-00	CARBON	33K	5%	1/6W	
R834	1-247-848-00	CARBON	5.1K	5%	1/6W	
R835	1-247-847-00	CARBON	4.7K	5%	1/6W	
R836	1-247-855-00	CARBON	10K	5%	1/6W	
R837	1-247-855-00	CARBON	10K	5%	1/6W	
R838	1-247-831-00	CARBON	1K	5%	1/6W	
R839	1-247-831-00	CARBON	1K	5%	1/6W	
R840	1-247-831-00	CARBON	1K	5%	1/6W	
R841	1-247-831-00	CARBON	1K	5%	1/6W	
R844	1-247-855-00	CARBON	10K	5%	1/6W	
R845	1-247-819-00	CARBON	330	5%	1/6W	
R846	1-247-829-00	CARBON	820	5%	1/6W	

VARIABLE RESISTOR

RV005	1-228-996-00	RES, ADJ, METAL GLAZE	47K
RV006	1-228-996-00	RES, ADJ, METAL GLAZE	47K
RV010	1-228-996-00	RES, ADJ, METAL GLAZE	47K
RV012	1-228-996-00	RES, ADJ, METAL GLAZE	47K
RV013	1-228-993-00	RES, ADJ, METAL GLAZE	4.7K
RV014	1-228-990-00	RES, ADJ, METAL GLAZE	1K
RV015	1-228-991-00	RES, ADJ, METAL GLAZE	2.2K
RV016	1-228-990-00	RES, ADJ, METAL GLAZE	1K
RV017	1-228-991-00	RES, ADJ, METAL GLAZE	2.2K
RV018	1-228-993-00	RES, ADJ, METAL GLAZE	4.7K
RV019	1-228-993-00	RES, ADJ, METAL GLAZE	4.7K
RV020	1-228-997-00	RES, ADJ, METAL GLAZE	100K
RV021	1-228-997-00	RES, ADJ, METAL GLAZE	100K
RV022	1-228-997-00	RES, ADJ, METAL GLAZE	100K
RV023	1-228-997-00	RES, ADJ, METAL GLAZE	100K

TRANSFORMER

T002	1-404-545-11	COIL, Q DET
T004	1-404-545-11	COIL, Q DET
T006	1-404-544-11	COIL, Q DET
T008	1-404-544-11	COIL, Q DET

****

♦:A-6713-203-A AM-5 BOARD, COMPLETE
****

♦:3-684-075-01 CASE (MAIN), SHIELD, AM
♦:3-684-076-01 LID, UPPER, AM SHIELD CASE
♦:3-684-077-03 LID, BOTTOM, AM SHIELD CASE

CAPACITOR

C501	1-123-356-00	ELECT	10MF	20%	16V
C505	1-123-330-00	ELECT	22MF	20%	16V
C506	1-123-333-00	ELECT	100MF	20%	16V
C507	1-123-333-00	ELECT	100MF	20%	16V
C508	1-123-369-00	ELECT	4.7MF	20%	25V
C509	1-123-369-00	ELECT	4.7MF	20%	25V
C510	1-130-497-00	MYLAR	0.15MF	5%	50V
C511	1-130-486-51	MYLAR	0.018MF	5%	50V
C512	1-123-333-00	ELECT	100MF	20%	16V
C513	1-123-379-00	ELECT	0.47MF	20%	50V
C514	1-123-330-00	ELECT	22MF	20%	16V

Ref.No	Part NO.	Description				Remark
C515	1-102-111-00	CERAMIC	270PF	10%	50V	
C516	1-123-382-00	ELECT	3.3MF	20%	50V	
C517	1-130-507-51	MYLAR	0.0018MF	10%	50V	
C518	1-123-318-00	ELECT	33MF	20%	10V	
C519	1-130-516-51	MYLAR	0.01MF	10%	50V	
C520	1-123-382-00	ELECT	3.3MF	20%	50V	
C521	1-123-369-00	ELECT	4.7MF	20%	25V	
C522	1-123-333-00	ELECT	100MF	20%	16V	
C524	1-127-475-00	ELECT(SOLID)	0.22MF	5%	25V	
C525	1-130-502-00	MYLAR	680PF	10%	50V	
C526	1-123-332-00	ELECT	47MF	20%	16V	
C527	1-130-479-00	MYLAR	0.0047MF	5%	50V	
C528	1-130-477-00	MYLAR	0.0033MF	5%	50V	
C529	1-129-709-00	FILM	0.0039MF	10%	630V	
C530	1-102-108-00	CERAMIC	150PF	10%	50V	
C531	1-123-333-00	ELECT	100MF	20%	16V	
C533	1-136-155-00	MYLAR	0.015MF	10%	50V	
C534	1-123-332-00	ELECT	47MF	20%	16V	
C535	1-102-111-00	CERAMIC	270PF	10%	50V	
C536	1-123-379-00	ELECT	0.47MF	20%	50V	
C537	1-123-333-00	ELECT	100MF	20%	16V	
C539	1-123-356-00	ELECT	10MF	20%	16V	

CONNECTOR

CN501♦	1-560-893-00	PIN, CONNECTOR 5P
CN502♦	1-560-893-00	PIN, CONNECTOR 5P
CN503♦	1-564-030-00	PIN, CONNECTOR 5P

TRIMMER

CT501	1-141-215-00	CAP, TRIMAR

DIODE

D506	8-719-911-19	DIODE 1SS119
D507	=>8-719-200-02	DIODE 10E2
D508	8-719-100-16	DIODE RD3.3E-B1

IC

IC501	8-759-800-79	IC LA7048

COIL

L501	1-407-963-00	MICRO INDUCTOR 15MMH
L502	1-407-508-00	MICRO INDUCTOR 22MMH
L503	1-407-710-00	MICRO INDUCTOR 270UH
L504	1-407-508-00	MICRO INDUCTOR 22MMH

TRANSISTOR

Q501	8-729-988-12	TRANSISTOR 2SA881
Q502	=>8-729-245-83	TRANSISTOR 2SC2458
Q504	8-729-967-32	TRANSISTOR 2SC2673
Q505	8-729-663-47	TRANSISTOR 2SC945-P
Q506	8-729-663-47	TRANSISTOR 2SC945-P
Q507	=>8-729-204-83	TRANSISTOR 2SA1048-GR
Q508	=>8-729-245-83	TRANSISTOR 2SC2458
Q509	=>8-729-245-83	TRANSISTOR 2SC2458
Q510	=>8-729-245-83	TRANSISTOR 2SC2458
Q511	=>8-729-245-83	TRANSISTOR 2SC2458

When indicating parts by reference number, please include the board name.

Ref.No	Part No.	Description				Remark
Q512	=>8-729-245-83	TRANSISTOR 2SC2458				
Q513	=>8-729-245-83	TRANSISTOR 2SC2458				
		RESISTOR				
R503	1-247-839-00	CARBON	2.2K	5%	1/6W	
R504	1-247-863-00	CARBON	22K	5%	1/6W	
R505	1-247-871-00	CARBON	47K	5%	1/6W	
R506	⚠ 1-247-660-00	CARBON	82	5%	1/4W	F
R507	1-247-847-00	CARBON	4.7K	5%	1/6W	
R508	1-247-867-00	CARBON	33K	5%	1/6W	
R509	1-247-847-00	CARBON	4.7K	5%	1/6W	
R510	1-247-855-00	CARBON	10K	5%	1/6W	
R511	1-247-867-00	CARBON	33K	5%	1/6W	
R512	⚠ 1-247-819-00	CARBON	330	5%	1/6W	
R513	1-247-855-00	CARBON	10K	5%	1/6W	
R514	1-247-903-00	CARBON	1M	5%	1/6W	
R515	1-247-849-00	CARBON	5.6K	5%	1/6W	
R516	1-247-819-00	CARBON	330	5%	1/6W	
R517	1-210-825-00	SOLID	3.3M	5%	1/4W	
R518	1-247-851-00	CARBON	6.8K	5%	1/6W	
R519	1-247-859-00	CARBON	15K	5%	1/6W	
R520	1-247-819-00	CARBON	330	5%	1/6W	
R521	1-247-891-00	CARBON	330K	5%	1/6W	
R522	1-247-883-00	CARBON	150K	5%	1/6W	
R524	1-247-783-00	CARBON	10	5%	1/6W	
R526	1-247-863-00	CARBON	22K	5%	1/6W	
R528	1-247-853-00	CARBON	8.2K	5%	1/6W	
R530	1-247-849-00	CARBON	5.6K	5%	1/6W	
R531	1-247-829-00	CARBON	820	5%	1/6W	
R532	1-247-862-00	CARBON	20K	5%	1/6W	
R533	⚠ 1-246-980-00	CARBON	3.3	5%	1/8W	F
R534	1-247-839-00	CARBON	2.2K	5%	1/6W	
R535	1-247-839-00	CARBON	2.2K	5%	1/6W	
R536	1-247-849-00	CARBON	5.6K	5%	1/6W	
R537	1-247-855-00	CARBON	10K	5%	1/6W	
R538	1-247-863-00	CARBON	22K	5%	1/6W	
R539	1-247-831-00	CARBON	1K	5%	1/6W	
R540	1-247-838-00	CARBON	2K	5%	1/6W	
R541	1-247-877-00	CARBON	82K	5%	1/6W	
R542	1-247-865-00	CARBON	27K	5%	1/6W	
R543	1-247-871-00	CARBON	47K	5%	1/6W	
R545	1-247-871-00	CARBON	47K	5%	1/6W	
R546	1-247-841-00	CARBON	2.7K	5%	1/6W	
R547	1-247-863-00	CARBON	22K	5%	1/6W	
R548	1-247-843-00	CARBON	3.3K	5%	1/6W	
R550	1-247-875-00	CARBON	68K	5%	1/6W	
R551	1-247-855-00	CARBON	10K	5%	1/6W	
R552	1-247-783-00	CARBON	10	5%	1/6W	
R561	1-247-840-00	CARBON	2.4K	5%	1/6W	
R562	1-247-855-00	CARBON	10K	5%	1/6W	
R563	1-247-895-00	CARBON	470K	5%	1/6W	

Ref.No	Part No.	Description	Remark
		VARIABLE RESISTOR	
RV501	1-228-748-00	RES, ADJ, CARBON 10K	
RV502	⚠ 1-228-989-00	RES, ADJ, METAL GLAZE 470	
RV503	1-228-751-00	RES, ADJ, CARBON 100K	
		TRANSFORMER	
T501	1-433-237-00	TRANSFORMER, OSCILLATOR	

****

♦: A-6715-224-B SS-28 BOARD, COMPLETE
****

		CAPACITOR			
C001	1-123-380-00	ELECT	1MF	20%	50V
C002	1-123-356-00	ELECT	10MF	20%	16V
C003	1-161-059-00	CERAMIC	0.047MF	10%	25V
C004	1-123-333-00	ELECT	100MF	20%	16V
C005	1-161-013-00	CERAMIC	0.01MF	10%	25V
C006	1-123-318-00	ELECT	33MF	20%	10V
C007	1-123-369-00	ELECT	4.7MF	20%	25V
C008	1-161-059-00	CERAMIC	0.047MF	10%	25V
C009	1-161-059-00	CERAMIC	0.047MF	10%	25V
C301	1-123-382-00	ELECT	3.3MF	20%	50V
C302	1-161-059-00	CERAMIC	0.047MF	10%	25V
C305	1-123-382-00	ELECT	3.3MF	20%	50V
C306	1-161-059-00	CERAMIC	0.047MF	10%	25V
C307	1-130-482-00	MYLAR	0.0082MF	5%	50V
C308	1-130-516-00	MYLAR	0.01MF	10%	50V
C309	1-130-516-00	MYLAR	0.01MF	10%	50V
C310	1-161-054-00	CERAMIC	0.018MF	10%	25V
C311	1-161-054-00	CERAMIC	0.018MF	10%	25V
C312	1-123-330-00	ELECT	22MF	20%	16V
C314	1-161-054-00	CERAMIC	0.018MF	10%	25V
C315	1-161-013-00	CERAMIC	0.01MF	10%	25V
C316	1-123-356-00	ELECT	10MF	20%	16V
C317	1-123-380-00	ELECT	1MF	20%	50V
C318	1-102-125-00	CERAMIC	0.0047MF	10%	50V
C319	1-161-059-00	CERAMIC	0.047MF	10%	25V
C320	1-124-429-00	ELECT	0.68MF	20%	50V
C321	1-161-059-00	CERAMIC	0.047MF	10%	25V
C322	1-161-059-00	CERAMIC	0.047MF	10%	25V
C323	1-123-382-00	ELECT	3.3MF	20%	50V
C324	1-131-409-00	ELECT(SOLID)	0.33MF	5%	25V
C326	1-123-310-00	ELECT	470MF	20%	10V
C327	1-123-308-00	ELECT	220MF	20%	10V
C328	1-161-059-00	CERAMIC	0.047MF	10%	25V
C329	1-131-357-00	TANTALUM	4.7MF	20%	25V
C330	1-123-381-00	ELECT	2.2MF	20%	50V

The components identified by shading and mark ⚠ are critical for safety. Replace only with part number specified.

When indicating parts by reference number, please include the board name.

SS-28

Ref.No	Part No.	Description			Remark
C331	1-123-381-00	ELECT	2.2MF	20%	50V
C332	1-161-059-00	CERAMIC	0.047MF	10%	25V
C333	1-131-357-00	TANTALUM	4.7MF	20%	25V
C334	1-102-106-00	CERAMIC	100PF	10%	50V
C335	1-123-333-00	ELECT	100MF	20%	16V
C336	1-123-333-00	ELECT	100MF	20%	16V
C337	1-130-479-00	MYLAR	0.0047MF	5%	50V
C338	1-123-332-00	ELECT	47MF	20%	16V
C339	1-161-059-00	CERAMIC	0.047MF	10%	25V
C340	1-123-381-00	ELECT	2.2MF	20%	50V
C341	1-123-306-00	ELECT	47MF	20%	10V
C342	1-123-306-00	ELECT	47MF	20%	10V
C343	1-161-054-00	CERAMIC	0.018MF	10%	25V
C344	1-161-013-00	CERAMIC	0.01MF	10%	25V
C345	1-161-055-00	CERAMIC	0.022MF	10%	25V
C346	1-161-040-00	CERAMIC	0.0012MF	10%	25V
C347	1-161-054-00	CERAMIC	0.018MF	10%	25V
C348	1-161-013-00	CERAMIC	0.01MF	10%	25V
C349	1-123-382-00	ELECT	3.3MF	20%	50V
C350	1-127-479-00	ELECT(SOLID)	1MF	5%	25V
C351	1-161-057-00	CERAMIC	0.033MF	10%	25V
C352	1-123-330-00	ELECT	22MF	20%	16V
C353	1-161-057-00	CERAMIC	0.033MF	10%	25V
C354	1-123-369-00	ELECT	4.7MF	20%	25V
C355	1-161-013-00	CERAMIC	0.01MF	10%	25V
C356	1-123-332-00	ELECT	47MF	20%	16V
C357	1-161-013-00	CERAMIC	0.01MF	10%	25V
C358	1-161-013-00	CERAMIC	0.01MF	10%	25V
C359	1-123-369-00	ELECT	4.7MF	20%	25V
C360	1-123-333-00	ELECT	100MF	20%	16V
C361	1-161-013-00	CERAMIC	0.01MF	10%	25V
C362	1-130-493-00	MYLAR	0.068MF	5%	50V
C601	1-129-794-00	FILM	0.0033MF	5%	100V
C602	1-129-794-00	FILM	0.0033MF	5%	100V
C603	1-136-161-00	MYLAR	0.047MF	10%	50V
C604	1-136-157-00	MYLAR	0.022MF	10%	50V
C605	1-136-161-00	MYLAR	0.047MF	10%	50V
C606	1-123-330-00	ELECT	22MF	20%	16V
C607	1-123-331-00	ELECT	33MF	20%	25V
C608	1-123-331-00	ELECT	33MF	20%	25V
C610	1-123-380-00	ELECT	1MF	20%	50V
C611	1-123-306-00	ELECT	47MF	20%	10V
C612	1-161-059-00	CERAMIC	0.047MF	10%	25V
C801	1-102-529-00	CERAMIC	100PF	5%	50V
C802	1-102-529-00	CERAMIC	100PF	5%	50V
C901	1-101-004-00	CARAMIC	0.01MF		50V

FILTER

CF601	1-527-822-00	OSCILLATOR, CERAMIC

CONNECTOR

CN001♣	1-560-891-00	PIN, CONNECTOR 3P
CN002♣	1-560-891-00	PIN, CONNECTOR 3P
CN003♣	1-560-892-00	PIN, CONNECTOR 4P
CN004♣	1-560-890-00	PIN, CONNECTOR 2P
CN301♣	1-560-892-00	PIN, CONNECTOR 4P
CN302♣	1-560-892-00	PIN, CONNECTOR 4P
CN303♣	1-560-890-00	PIN, CONNECTOR 2P
CN304♣	1-560-890-00	PIN, CONNECTOR 2P
CN305♣	1-560-897-00	PIN, CONNECTOR 9P
CN306♣	1-560-895-00	PIN, CONNECTOR 7P
CN307♣	1-560-466-00	PIN, CONNECTOR 3P
CN308♣	1-560-894-00	PIN, CONNECTOR 6P
CN309♣	1-560-892-00	PIN, CONNECTOR 4P
CN601♣	1-560-895-00	PIN, CONNECTOR 7P
CN602♣	1-560-897-00	PIN, CONNECTOR 9P
CN603♣	1-560-890-00	PIN, CONNECTOR 2P
CN604♣	1-560-890-00	PIN, CONNECTOR 2P
CN605♣	1-560-890-00	PIN, CONNECTOR 2P
CN606♣	1-560-892-00	PIN, CONNECTOR 4P
CN607♣	1-560-890-00	PIN, CONNECTOR 2P
CN608♣	1-560-892-00	PIN, CONNECTOR 4P
CN609♣	1-560-893-00	PIN, CONNECTOR 5P
CN610♣	1-560-891-00	PIN, CONNECTOR 3P
CN611♣	1-560-891-00	PIN, CONNECTOR 3P
CN612♣	1-560-896-00	PIN, CONNECTOR 8P
CN613♣	1-560-895-00	PIN, CONNECTOR 7P
CN614♣	1-560-897-00	PIN, CONNECTOR 9P
CN615♣	1-560-893-00	PIN, CONNECTOR 5P

DIODE

D001	8-719-000-06	DIODE MC921
D002	8-719-911-19	DIODE 1SS119
D003	8-719-911-19	DIODE 1SS119
D004	8-719-911-19	DIODE 1SS119
D005	8-719-200-02	DIODE 10E2
D006	8-719-911-19	DIODE 1SS119
D007	8-719-911-19	DIODE 1SS119
D008	8-719-911-19	DIODE 1SS119
D009	8-719-911-19	DIODE 1SS119
D010	8-719-911-19	DIODE 1SS119
D011	8-719-911-19	DIODE 1SS119
D012	8-719-911-19	DIODE 1SS119
D303 ⚠	8-719-100-57	DIODE RD10E-B2
D304 ⚠	8-719-162-07	DIODE RD6.2E-B
D305	8-719-911-19	DIODE 1SS119
D306	8-719-000-04	DIODE MC911
D307	8-719-812-31	DIODE TLR123
D308	8-719-000-06	DIODE MC921
D309	8-719-911-19	DIODE 1SS119
D310	8-719-000-12	DIODE MC931
D311	8-719-000-06	DIODE MC921
D312	8-719-911-19	DIODE 1SS119
D313	8-719-911-19	DIODE 1SS119
D601	8-719-911-19	DIODE 1SS119

The components identified by shading and mark ⚠ are critical for safety. Replace only with part number specified.

When indicating parts by reference number, please include the board name.

Ref.No	Part No.	Description	Remark
D602	8-719-000-06	DIODE MC921	
D603	8-719-911-19	DIODE 1SS119	
D604	8-719-911-19	DIODE 1SS119	
D605	8-719-911-19	DIODE 1SS119	
D606	8-719-911-19	DIODE 1SS119	
D607	8-719-911-19	DIODE 1SS119	
D608	8-719-911-19	DIODE 1SS119	
		IC	
IC001	8-759-135-80	IC UPC358C	
IC301	=>8-751-941-05	IC CX194B-5	
IC302	8-759-135-80	IC UPC358C	
IC303	8-759-145-58	IC UPC4558C	
IC304	8-759-132-40	IC UPC324C	
IC305	8-759-240-53	IC TC4053BP	
IC306	8-759-132-40	IC UPC324C	
IC307	8-759-240-53	IC TC4053BP	
IC601	8-759-910-55	IC MB88421-141M	
IC602	8-759-800-72	IC LA7205	
		COIL	
L601	1-408-418-00	MICRO INDUCTOR 56UH	
		IC LINK	
PS001⚠	1-532-637-11	LINK, IC (ICP-N25)	
PS002⚠	1-532-679-11	LINK, IC (ICP-N15)	
PS003⚠	1-532-605-11	LINK, IC (ICP-N10)	
		TRANSISTOR	
Q001	=>8-729-245-83	TRANSISTOR 2SC2458	
Q002	=>8-729-204-83	TRANSISTOR 2SA1048-GR	
Q003	=>8-729-245-83	TRANSISTOR 2SC2458	
Q004	=>8-729-204-83	TRANSISTOR 2SA1048-GR	
Q005	=>8-729-245-83	TRANSISTOR 2SC2458	
Q006	=>8-729-245-83	TRANSISTOR 2SC2458	
Q007	=>8-729-245-83	TRANSISTOR 2SC2458	
Q008	=>8-729-245-83	TRANSISTOR 2SC2458	
Q009	=>8-729-245-83	TRANSISTOR 2SC2458	
Q010	=>8-729-245-83	TRANSISTOR 2SC2458	
Q011	=>8-729-245-83	TRANSISTOR 2SC2458	
Q012	=>8-729-245-83	TRANSISTOR 2SC2458	
Q013	=>8-729-245-83	TRANSISTOR 2SC2458	
Q014	=>8-729-245-83	TRANSISTOR 2SC2458	
Q015	=>8-729-245-83	TRANSISTOR 2SC2458	
Q016	=>8-729-245-83	TRANSISTOR 2SC2458	
Q017	8-729-900-89	TRANSISTOR DTC144ES	
Q018	=>8-729-245-83	TRANSISTOR 2SC2458	
Q020	=>8-729-204-83	TRANSISTOR 2SA1048-GR	
Q021	=>8-729-177-32	TRANSISTOR 2SD773	
Q022	=>8-729-245-83	TRANSISTOR 2SC2458	
Q023	8-729-900-36	TRANSISTOR DTC124ES	
Q024	=>8-729-245-83	TRANSISTOR 2SC2458	
Q025	=>8-729-245-83	TRANSISTOR 2SC2458	

Ref.No	Part No.	Description	Remark
Q026	=>8-729-245-83	TRANSISTOR 2SC2458	
Q027	=>8-729-245-83	TRANSISTOR 2SC2458	
Q028	8-729-374-02	TRANSISTOR 2SB740	
Q029	=>8-729-177-43	TRANSISTOR 2SD774	
Q030	8-729-374-02	TRANSISTOR 2SB740	
Q031	=>8-729-177-43	TRANSISTOR 2SD774	
Q032	=>8-729-245-83	TRANSISTOR 2SC2458	
Q033	=>8-729-245-83	TRANSISTOR 2SC2458	
Q034	=>8-729-245-83	TRANSISTOR 2SC2458	
Q035	=>8-729-245-83	TRANSISTOR 2SC2458	
Q036	=>8-729-245-83	TRANSISTOR 2SC2458	
Q037	=>8-729-245-83	TRANSISTOR 2SC2458	
Q038	=>8-729-204-83	TRANSISTOR 2SA1048-GR	
Q301	=>8-729-177-43	TRANSISTOR 2SD774	
Q302	=>8-729-245-83	TRANSISTOR 2SC2458	
Q305	=>8-729-245-83	TRANSISTOR 2SC2458	
Q306	=>8-729-204-83	TRANSISTOR 2SA1048-GR	
Q307	8-729-900-80	TRANSISTOR DTC114ES	
Q308	8-729-900-36	TRANSISTOR DTC124ES	
Q309	=>8-729-245-83	TRANSISTOR 2SC2458	
Q310	8-729-900-89	TRANSISTOR DTC144ES	
Q311	=>8-729-245-83	TRANSISTOR 2SC2458	
Q312	=>8-729-245-83	TRANSISTOR 2SC2458	
Q313	=>8-729-245-83	TRANSISTOR 2SC2458	
Q314	=>8-729-245-83	TRANSISTOR 2SC2458	
Q315	=>8-729-245-83	TRANSISTOR 2SC2458	
Q316	=>8-729-245-83	TRANSISTOR 2SC2458	
Q317	8-729-900-89	TRANSISTOR DTC144ES	
Q318	=>8-729-245-83	TRANSISTOR 2SC2458	
Q319	=>8-729-204-83	TRANSISTOR 2SA1048-GR	
Q320	=>8-729-177-43	TRANSISTOR 2SD774	
Q321	⚠.8-729-117-54	TRANSISTOR 2SA1175	
Q322	⚠.8-729-805-13	TRANSISTOR 2SC1475-13	
Q323	=>8-729-245-83	TRANSISTOR 2SC2458	
Q324	=>8-729-245-83	TRANSISTOR 2SC2458	
Q325	=>8-729-204-83	TRANSISTOR 2SA1048-GR	
Q326	=>8-729-204-83	TRANSISTOR 2SA1048-GR	
Q327	=>8-729-245-83	TRANSISTOR 2SC2458	
Q328	=>8-729-245-83	TRANSISTOR 2SC2458	
Q330	=>8-729-204-83	TRANSISTOR 2SA1048-GR	
Q601	=>8-729-245-83	TRANSISTOR 2SC2458	
Q602	8-729-900-89	TRANSISTOR DTC144ES	
Q603	8-729-900-89	TRANSISTOR DTC144ES	
Q604	=>8-729-177-43	TRANSISTOR 2SD774	
Q605	8-729-116-42	TRANSISTOR 2SD1164	
Q606	8-729-900-89	TRANSISTOR DTC144ES	
Q607	8-729-900-89	TRANSISTOR DTC144ES	
Q608	=>8-729-177-43	TRANSISTOR 2SD774	
Q609	8-729-116-42	TRANSISTOR 2SD1164	
Q610	8-729-900-89	TRANSISTOR DTC144ES	
Q611	=>8-729-245-83	TRANSISTOR 2SC2458	
Q612	=>8-729-245-83	TRANSISTOR 2SC2458	
Q613	=>8-729-245-83	TRANSISTOR 2SC2458	

The components identified by shading and mark ⚠ are critical for safety. Replace only with part number specified.

When indicating parts by reference number, please include the board name.

SS-28

Ref.No	Part No.	Description	Remark
Q614	8-729-900-89	TRANSISTOR DTC144ES	
Q615	8-729-987-42	TRANSISTOR 2SA874	
Q616	=>8-729-204-83	TRANSISTOR 2SA1048-GR	
Q617	=>8-729-204-83	TRANSISTOR 2SA1048-GR	
Q618	=>8-729-204-83	TRANSISTOR 2SA1048-GR	
Q619	=>8-729-204-83	TRANSISTOR 2SA1048-GR	
Q620	=>8-729-204-83	TRANSISTOR 2SA1048-GR	
Q621	=>8-729-204-83	TRANSISTOR 2SA1048-GR	
Q622	=>8-729-245-83	TRANSISTOR 2SC2458	
Q623	=>8-729-245-83	TRANSISTOR 2SC2458	
Q624	=>8-729-245-83	TRANSISTOR 2SC2458	
Q901	=>8-729-245-83	TRANSISTOR 2SC2458	

RESISTOR

Ref.No	Part No.	Description				Remark
R001	1-247-871-00	CARBON	47K	5%	1/6W	
R002	1-247-855-00	CARBON	10K	5%	1/6W	
R003	1-247-863-00	CARBON	22K	5%	1/6W	
R004	1-247-125-00	CARBON	560	5%	1/4W	
R005	1-247-128-00	CARBON	750	5%	1/4W	
R006	1-247-855-00	CARBON	10K	5%	1/6W	
R007	1-247-871-00	CARBON	47K	5%	1/6W	
R008	1-247-855-00	CARBON	10K	5%	1/6W	
R009	1-247-871-00	CARBON	47K	5%	1/6W	
R010	1-247-871-00	CARBON	47K	5%	1/6W	
R011	1-247-871-00	CARBON	47K	5%	1/6W	
R012	1-247-850-00	CARBON	6.2K	5%	1/6W	
R013	1-247-853-00	CARBON	8.2K	5%	1/6W	
R014	1-247-871-00	CARBON	47K	5%	1/6W	
R016	1-247-855-00	CARBON	10K	5%	1/6W	
R017	1-247-871-00	CARBON	47K	5%	1/6W	
R018	1-247-871-00	CARBON	47K	5%	1/6W	
R020	1-247-831-00	CARBON	1K	5%	1/6W	
R021	1-247-855-00	CARBON	10K	5%	1/6W	
R022	1-247-847-00	CARBON	4.7K	5%	1/6W	
R023	1-247-871-00	CARBON	47K	5%	1/6W	
R024	1-247-871-00	CARBON	47K	5%	1/6W	
R025	1-247-127-00	CARBON	680	5%	1/4W	
R026	1-247-879-00	CARBON	100K	5%	1/6W	
R027	1-247-855-00	CARBON	10K	5%	1/6W	
R028	1-247-831-00	CARBON	1K	5%	1/6W	
R031	1-247-875-00	CARBON	68K	5%	1/6W	
R032	1-247-871-00	CARBON	47K	5%	1/6W	
R033 ⚠	1-212-366-00	METAL OXIDE	3.3	5%	1W	F
R034 ⚠	1-247-819-00	CARBON	330	5%	1/6W	
R035	1-247-871-00	CARBON	47K	5%	1/6W	
R036	1-247-871-00	CARBON	47K	5%	1/6W	
R037	1-247-855-00	CARBON	10K	5%	1/6W	
R038	1-247-863-00	CARBON	22K	5%	1/6W	

Ref.No	Part No.	Description				Remark
R041	1-247-855-00	CARBON	10K	5%	1/6W	
R042	1-247-863-00	CARBON	22K	5%	1/6W	
R043	1-247-865-00	CARBON	27K	5%	1/6W	
R044	1-247-855-00	CARBON	10K	5%	1/6W	
R045	1-247-871-00	CARBON	47K	5%	1/6W	
R046	1-247-863-00	CARBON	22K	5%	1/6W	
R047	1-247-855-00	CARBON	10K	5%	1/6W	
R048	1-247-845-00	CARBON	3.9K	5%	1/6W	
R049	1-247-831-00	CARBON	1K	5%	1/6W	
R050	1-247-873-00	CARBON	56K	5%	1/6W	
R051	1-247-831-00	CARBON	1K	5%	1/6W	
R052	1-247-869-00	CARBON	39K	5%	1/6W	
R053	1-247-871-00	CARBON	47K	5%	1/6W	
R054	1-247-855-00	CARBON	10K	5%	1/6W	
R055	1-247-871-00	CARBON	47K	5%	1/6W	
R056	1-247-871-00	CARBON	47K	5%	1/6W	
R057	1-247-855-00	CARBON	10K	5%	1/6W	
R058	1-247-871-00	CARBON	47K	5%	1/6W	
R059	1-247-871-00	CARBON	47K	5%	1/6W	
R060	1-247-855-00	CARBON	10K	5%	1/6W	
R061	1-247-863-00	CARBON	22K	5%	1/6W	
R062	1-247-863-00	CARBON	22K	5%	1/6W	
R063	1-247-232-00	CARBON	470	5%	1/2W	
R064	1-247-849-00	CARBON	5.6K	5%	1/6W	
R065	1-247-831-00	CARBON	1K	5%	1/6W	
R066 ⚠	1-212-360-00	METAL OXIDE	1	5%	1W	F
R067	1-247-849-00	CARBON	5.6K	5%	1/6W	
R068	1-247-831-00	CARBON	1K	5%	1/6W	
R069	1-247-232-00	CARBON	470	5%	1/2W	
R070	1-247-855-00	CARBON	10K	5%	1/6W	
R071	1-247-863-00	CARBON	22K	5%	1/6W	
R072	1-247-863-00	CARBON	22K	5%	1/6W	
R073	1-247-871-00	CARBON	47K	5%	1/6W	
R075	1-247-863-00	CARBON	22K	5%	1/6W	
R076	1-247-871-00	CARBON	47K	5%	1/6W	
R077	1-247-821-00	CARBON	390	5%	1/6W	
R078	1-247-855-00	CARBON	10K	5%	1/6W	
R079	1-247-855-00	CARBON	10K	5%	1/6W	
R080	1-247-855-00	CARBON	10K	5%	1/6W	
R081	1-247-903-00	CARBON	1M	5%	1/6W	
R082	1-247-831-00	CARBON	1K	5%	1/6W	
R083	1-247-903-00	CARBON	1M	5%	1/6W	
R084	1-247-879-00	CARBON	100K	5%	1/6W	
R085	1-247-879-00	CARBON	100K	5%	1/6W	
R086 ⚠	1-206-640-00	METAL OXIDE	100	5%	2W	F
R316	1-247-871-00	CARBON	47K	5%	1/6W	
R317	1-247-863-00	CARBON	22K	5%	1/6W	
R318	1-247-863-00	CARBON	22K	5%	1/6W	
R319	1-247-871-00	CARBON	47K	5%	1/6W	
R320	1-247-871-00	CARBON	47K	5%	1/6W	
R321	1-247-859-00	CARBON	15K	5%	1/6W	
R322	1-247-857-00	CARBON	12K	5%	1/6W	

The components identified by shading and mark ⚠ are critical for safety. Replace only with part number specified.

When indicating parts by reference number, please include the board name.

Ref.No	Part No.	Description				Remark
R323	1-247-845-00	CARBON	3.9K	5%	1/6W	
R326	1-247-838-00	CARBON	2K	5%	1/6W	
R327	1-247-828-00	CARBON	750	5%	1/6W	
R328	1-247-847-00	CARBON	4.7K	5%	1/6W	
R329	1-247-855-00	CARBON	10K	5%	1/6W	
R330 ⚠	1-212-360-00	METAL OXIDE	1	5%	1W	F
R331 ⚠	1-212-849-00	FUSIBLE	4.7	5%	1/4W	F
R332	1-247-821-00	CARBON	390	5%	1/6W	
R333 ⚠	1-212-855-00	FUSIBLE	8.2	5%	1/4W	F
R334	1-247-887-00	CARBON	220K	5%	1/6W	
R335	1-247-887-00	CARBON	220K	5%	1/6W	
R336	1-247-865-00	CARBON	27K	5%	1/6W	
R337	1-247-865-00	CARBON	27K	5%	1/6W	
R338	1-247-848-00	CARBON	5.1K	5%	1/6W	
R339	1-247-865-00	CARBON	27K	5%	1/6W	
R340	1-247-867-00	CARBON	33K	5%	1/6W	
R341	1-247-855-00	CARBON	10K	5%	1/6W	
R342	1-247-856-00	CARBON	11K	5%	1/6W	
R343	1-247-872-00	CARBON	51K	5%	1/6W	
R344	1-247-847-00	CARBON	4.7K	5%	1/6W	
R345	1-247-873-00	CARBON	56K	5%	1/6W	
R346	1-247-900-00	CARBON	750K	5%	1/6W	
R347	1-247-837-00	CARBON	1.8K	5%	1/6W	
R348	1-247-855-00	CARBON	10K	5%	1/6W	
R349	1-247-871-00	CARBON	47K	5%	1/6W	
R350	1-247-825-00	CARBON	560	5%	1/6W	
R351	1-247-842-00	CARBON	3K	5%	1/6W	
R352	1-247-843-00	CARBON	3.3K	5%	1/6W	
R353 ⚠	1-212-850-00	FUSIBLE	5.1	5%	1/4W	F
R354 ⚠	1-206-482-00	METAL OXIDE	62	5%	2W	F
R355 ⚠	1-212-857-00	FUSIBLE	10	5%	1/4W	F
R356	1-247-859-00	CARBON	15K	5%	1/6W	
R357	1-247-823-00	CARBON	470	5%	1/6W	
R358	1-247-855-00	CARBON	10K	5%	1/6W	
R359	1-247-831-00	CARBON	1K	5%	1/6W	
R360	1-247-903-00	CARBON	1M	5%	1/6W	
R361	1-247-855-00	CARBON	10K	5%	1/6W	
R362	1-247-831-00	CARBON	1K	5%	1/6W	
R363	1-247-903-00	CARBON	1M	5%	1/6W	
R364	1-247-871-00	CARBON	47K	5%	1/6W	
R365	1-247-855-00	CARBON	10K	5%	1/6W	
R366	1-247-871-00	CARBON	47K	5%	1/6W	
R367	1-247-829-00	CARBON	820	5%	1/6W	
R368	1-247-880-00	CARBON	110K	5%	1/6W	
R369	1-247-839-00	CARBON	2.2K	5%	1/6W	
R370	1-247-839-00	CARBON	2.2K	5%	1/6W	
R373	1-247-891-00	CARBON	330K	5%	1/6W	
R374	1-247-891-00	CARBON	330K	5%	1/6W	
R375	1-247-863-00	CARBON	22K	5%	1/6W	

Ref.No	Part No.	Description				Remark
R376	1-247-849-00	CARBON	5.6K	5%	1/6W	
R377	1-247-855-00	CARBON	10K	5%	1/6W	
R378	1-247-835-00	CARBON	1.5K	5%	1/6W	
R379	1-247-855-00	CARBON	10K	5%	1/6W	
R380	1-247-819-00	CARBON	330	5%	1/6W	
R383	1-247-849-00	CARBON	5.6K	5%	1/6W	
R384	1-247-857-00	CARBON	12K	5%	1/6W	
R385	1-247-855-00	CARBON	10K	5%	1/6W	
R386	1-247-839-00	CARBON	2.2K	5%	1/6W	
R389	1-247-847-00	CARBON	4.7K	5%	1/6W	
R390	1-247-859-00	CARBON	15K	5%	1/6W	
R391	1-247-855-00	CARBON	10K	5%	1/6W	
R392	1-247-871-00	CARBON	47K	5%	1/6W	
R393	1-247-867-00	CARBON	33K	5%	1/6W	
R394	1-247-879-00	CARBON	100K	5%	1/6W	
R395	1-247-879-00	CARBON	100K	5%	1/6W	
R396	1-247-887-00	CARBON	220K	5%	1/6W	
R397	1-247-867-00	CARBON	33K	5%	1/6W	
R398	1-247-883-00	CARBON	150K	5%	1/6W	
R399	1-247-883-00	CARBON	150K	5%	1/6W	
R400	1-247-857-00	CARBON	12K	5%	1/6W	
R401	1-247-879-00	CARBON	100K	5%	1/6W	
R402	1-247-879-00	CARBON	100K	5%	1/6W	
R403	1-247-883-00	CARBON	150K	5%	1/6W	
R404	1-247-855-00	CARBON	10K	5%	1/6W	
R405	1-247-867-00	CARBON	33K	5%	1/6W	
R406	1-247-883-00	CARBON	150K	5%	1/6W	
R407	1-247-871-00	CARBON	47K	5%	1/6W	
R408	1-247-867-00	CARBON	33K	5%	1/6W	
R409	1-247-897-00	CARBON	560K	5%	1/6W	
R410	1-247-847-00	CARBON	4.7K	5%	1/6W	
R411	1-247-871-00	CARBON	47K	5%	1/6W	
R412	1-247-897-00	CARBON	560K	5%	1/6W	
R413	1-247-867-00	CARBON	33K	5%	1/6W	
R414	1-247-868-00	CARBON	36K	5%	1/6W	
R415	1-247-832-00	CARBON	1.1K	5%	1/6W	
R416	1-247-857-00	CARBON	12K	5%	1/6W	
R417	1-247-866-00	CARBON	30K	5%	1/6W	
R418	1-247-871-00	CARBON	47K	5%	1/6W	
R419	1-247-855-00	CARBON	10K	5%	1/6W	
R420	1-247-871-00	CARBON	47K	5%	1/6W	
R421	1-247-871-00	CARBON	47K	5%	1/6W	
R422	1-247-823-00	CARBON	470	5%	1/6W	
R423	1-247-847-00	CARBON	4.7K	5%	1/6W	
R424 ⚠	1-212-360-00	METAL OXIDE	1	5%	1W	F
R426	1-247-871-00	CARBON	47K	5%	1/6W	
R427	1-247-855-00	CARBON	10K	5%	1/6W	
R428	1-247-879-00	CARBON	100K	5%	1/6W	
R429	1-247-871-00	CARBON	47K	5%	1/6W	

The components identified by shading and mark ⚠ are critical for safety. Replace only with part number specified.

When indicating parts by reference number, please include the board name.

SS-28

Ref.No	Part No.	Description				Remark
R430	1-247-859-00	CARBON	15K	5%	1/6W	
R431	1-247-871-00	CARBON	47K	5%	1/6W	
R432	1-247-859-00	CARBON	15K	5%	1/6W	
R433	1-247-871-00	CARBON	47K	5%	1/6W	
R434	1-247-855-00	CARBON	10K	5%	1/6W	
R435	1-247-871-00	CARBON	47K	5%	1/6W	
R436	1-247-831-00	CARBON	1K	5%	1/6W	
R437	1-247-831-00	CARBON	1K	5%	1/6W	
R438	1-247-831-00	CARBON	1K	5%	1/6W	
R441	1-247-859-00	CARBON	15K	5%	1/6W	
R442	1-247-855-00	CARBON	10K	5%	1/6W	
R443	1-247-825-00	CARBON	560	5%	1/6W	
R444	1-247-871-00	CARBON	47K	5%	1/6W	
R445	1-247-855-00	CARBON	10K	5%	1/6W	
R446	1-247-847-00	CARBON	4.7K	5%	1/6W	
R447	1-247-839-00	CARBON	2.2K	5%	1/6W	
R448	1-247-855-00	CARBON	10K	5%	1/6W	
R449	1-247-855-00	CARBON	10K	5%	1/6W	
R601	1-247-831-00	CARBON	1K	5%	1/6W	
R602	1-247-871-00	CARBON	47K	5%	1/6W	
R603	1-247-869-00	CARBON	39K	5%	1/6W	
R604	1-247-862-00	CARBON	20K	5%	1/6W	
R605	1-247-862-00	CARBON	20K	5%	1/6W	
R606	1-247-873-00	CARBON	56K	5%	1/6W	
R607	1-247-869-00	CARBON	39K	5%	1/6W	
R608	1-247-829-00	CARBON	820	5%	1/6W	
R609	1-247-829-00	CARBON	820	5%	1/6W	
R610	1-247-869-00	CARBON	39K	5%	1/6W	
R611	1-247-829-00	CARBON	820	5%	1/6W	
R612	1-247-829-00	CARBON	820	5%	1/6W	
R613	1-247-869-00	CARBON	39K	5%	1/6W	
R614	1-247-869-00	CARBON	39K	5%	1/6W	
R615	1-247-827-00	CARBON	680	5%	1/6W	
R616	1-247-853-00	CARBON	8.2K	5%	1/6W	
R617	1-247-855-00	CARBON	10K	5%	1/6W	
R618	1-247-853-00	CARBON	8.2K	5%	1/6W	
R619	1-247-853-00	CARBON	8.2K	5%	1/6W	
R620	1-247-853-00	CARBON	8.2K	5%	1/6W	
R621	1-247-853-00	CARBON	8.2K	5%	1/6W	
R622	1-247-849-00	CARBON	5.6K	5%	1/6W	
R623	1-247-855-00	CARBON	10K	5%	1/6W	
R624	1-247-842-00	CARBON	3K	5%	1/6W	
R625	1-247-807-00	CARBON	100	5%	1/6W	
R626	1-247-873-00	CARBON	56K	5%	1/6W	
R627	1-247-863-00	CARBON	22K	5%	1/6W	
R628	1-247-809-00	CARBON	120	5%	1/6W	
R629	1-247-830-00	CARBON	910	5%	1/6W	
R630	1-247-863-00	CARBON	22K	5%	1/6W	
R631	1-247-855-00	CARBON	10K	5%	1/6W	
R632	1-247-839-00	CARBON	2.2K	5%	1/6W	
R633	1-247-839-00	CARBON	2.2K	5%	1/6W	
R634	1-247-839-00	CARBON	2.2K	5%	1/6W	
R635	1-247-839-00	CARBON	2.2K	5%	1/6W	
R636	1-247-839-00	CARBON	2.2K	5%	1/6W	
R637	1-247-839-00	CARBON	2.2K	5%	1/6W	
R638	1-247-855-00	CARBON	10K	5%	1/6W	
R639	1-247-855-00	CARBON	10K	5%	1/6W	
R640	1-247-855-00	CARBON	10K	5%	1/6W	
R641	1-247-855-00	CARBON	10K	5%	1/6W	
R642	1-247-855-00	CARBON	10K	5%	1/6W	
R643	1-247-829-00	CARBON	820	5%	1/6W	
R644	1-247-829-00	CARBON	820	5%	1/6W	
R645	1-247-829-00	CARBON	820	5%	1/6W	
R646	1-247-829-00	CARBON	820	5%	1/6W	
R647	1-247-829-00	CARBON	820	5%	1/6W	
R648	1-247-829-00	CARBON	820	5%	1/6W	
R649	1-247-829-00	CARBON	820	5%	1/6W	
R650	1-247-853-00	CARBON	8.2K	5%	1/6W	
R651	1-247-871-00	CARBON	47K	5%	1/6W	
R652	1-247-847-00	CARBON	4.7K	5%	1/6W	
R653	1-247-831-00	CARBON	1K	5%	1/6W	
R654	1-247-831-00	CARBON	1K	5%	1/6W	
R655	1-247-831-00	CARBON	1K	5%	1/6W	
R656	1-247-871-00	CARBON	47K	5%	1/6W	
R657	1-247-869-00	CARBON	39K	5%	1/6W	
R658	1-247-839-00	CARBON	2.2K	5%	1/6W	
R901	1-247-871-00	CARBON	47K	5%	1/6W	
R902	1-247-863-00	CARBON	22K	5%	1/6W	
R903	1-247-841-00	CARBON	2.7K	5%	1/6W	

VARIABLE RESISTOR

RV001	1-228-991-00	RES, ADJ, METAL GLAZE 2.2K
RV301	1-224-254-XX	RES, ADJ, METAL GLAZE 47K
RV302	1-228-750-00	RES, ADJ, CARBON 47K
RV303	1-228-750-00	RES, ADJ, CARBON 47K
RV304	1-228-991-00	RES, ADJ, METAL GLAZE 2.2K
RV305	1-228-750-00	RES, ADJ, CARBON 47K
RV306	1-228-994-00	RES, ADJ, METAL GLAZE 10K
RV307	1-228-994-00	RES, ADJ, METAL GLAZE 10K

THERMISTOR

TH002	1-800-202-XX	THERMISTOR S-10K
TH301	1-800-198-XX	THERMISTOR S-1K
TH302	1-800-200-00	THERMISTOR S-3K

****

When indicating parts by reference number, please include the board name.

Ref.No	Part No.	Description	Remark
	♦:1-612-323-12	FU-22 BOARD	
		**********	
	♦:3-674-372-00	HOLDER (A), LED	
	♦:3-684-040-01	HOLDER (T), LED	
	♦:3-684-058-01	SPACER, LED	
		CONNECTOR	
CN301	♦:1-564-019-11	PIN, CONNECTOR 9P	
CN302	♦:1-564-017-00	PIN, CONNECTOR 7P	
		DIODE	
D301	8-719-812-31	DIODE TLR123	
D302	8-719-812-30	DIODE TL0123	
D303	8-719-812-32	DIODE TLY123	
D304	8-719-812-32	DIODE TLY123	
D305	8-719-812-33	DIODE TLG123A	
D306	8-719-812-30	DIODE TL0123	
D307	8-719-812-33	DIODE TLG123A	
D308	8-719-906-49	DIODE LT-9230N	
D309	8-719-812-33	DIODE TLG123A	
		RESISTOR	
R301	1-247-811-00	CARBON 150 5% 1/6W	
R302	1-247-817-00	CARBON 270 5% 1/6W	
R303	1-247-811-00	CARBON 150 5% 1/6W	
R304	1-247-807-00	CARBON 100 5% 1/6W	
R305	1-247-811-00	CARBON 150 5% 1/6W	
R306	1-247-811-00	CARBON 150 5% 1/6W	
R307	1-247-811-00	CARBON 150 5% 1/6W	
R308	1-247-811-00	CARBON 150 5% 1/6W	
R309	1-247-815-00	CARBON 220 5% 1/6W	
		VARIABLE RESISTOR	
RV301	1-228-988-00	RES, VAR, CARBON 10K/10K	
		SWITCH	
S301	1-553-997-00	SWITCH, KEY BOARD	
S302	1-553-997-00	SWITCH, KEY BOARD	
S303	1-553-997-00	SWITCH, KEY BOARD	
S304	1-553-997-00	SWITCH, KEY BOARD	
S305	1-553-997-00	SWITCH, KEY BOARD	
S306	1-553-997-00	SWITCH, KEY BOARD	
S307	1-553-997-00	SWITCH, KEY BOARD	
S308	1-553-997-00	SWITCH, KEY BOARD	
**********			
	♦:1-610-400-00	MT-4 BOARD	
		**********	
	⚠1-463-350-12	TUNER (BT-881)	
**********			

Ref.No	Part No.	Description			Remark
	♦:A-6721-201-A	TU-60 BOARD, COMPLETE			
		**********			
	♦:3-662-227-00	HOLDER (R-3), LED			
	♦:3-674-390-00	HOLDER (B), LED			
	♦:3-681-220-00	BAND, RETAINER, TUNER			
	♦:3-681-233-00	CASE, SHIELD (MAIN), TU			
	♦:3-684-073-01	LID, UPPER, TU SHIELD CASE (S)			
	♦:3-684-074-01	LID, BOTTOM, TU SHIELD CASE (S)			
C001	1-102-529-00	CERAMIC	100PF	5%	50V
C002	1-102-527-00	CERAMIC	82PF	5%	50V
C003	1-102-949-00	CERAMIC	12PF	5%	50V
C004	1-102-523-00	CERAMIC	56PF	5%	50V
C005	1-161-030-00	CERAMIC	0.0047MF	20%	25V
C006	1-161-030-00	CERAMIC	0.0047MF	20%	25V
C007	1-161-030-00	CERAMIC	0.0047MF	20%	25V
C008	1-161-030-00	CERAMIC	0.0047MF	20%	25V
C009	1-123-380-00	ELECT	1MF	20%	50V
C010	1-123-356-00	ELECT	10MF	20%	16V
C011	1-161-030-00	CERAMIC	0.0047MF	20%	25V
C012	1-161-030-00	CERAMIC	0.0047MF	20%	25V
C013	1-161-059-00	CERAMIC	0.047MF	20%	25V
C014	1-102-529-00	CERAMIC	100PF	5%	50V
C015	1-123-332-00	ELECT	47MF	20%	16V
C016	1-101-004-00	CERAMIC	0.01MF		50V
C017	1-102-979-00	CERAMIC	240PF	5%	50V
C018	1-161-055-00	CERAMIC	0.022MF	20%	25V
C019	1-123-380-00	ELECT	1MF	20%	50V
C020	1-161-030-00	CERAMIC	0.0047MF	20%	25V
C021	1-123-286-00	ELECT	0.33MF	20%	50V
C022	1-161-032-00	CERAMIC	0.01MF	20%	25V
C023	1-101-361-00	CERAMIC	150PF	10%	50V
C024	1-123-380-00	ELECT	1MF	20%	50V
C025	1-104-077-00	POLYSTYRENE	0.001MF	5%	50V
C026	1-161-055-00	CERAMIC	0.022MF	20%	25V
C027	1-161-055-00	CERAMIC	0.022MF	20%	25V
C028	1-161-055-00	CERAMIC	0.022MF	20%	25V
C029	1-130-478-00	MYLAR	0.0039MF	5%	50V
C030	1-130-478-00	MYLAR	0.0039MF	5%	50V
C031	1-130-478-00	MYLAR	0.0039MF	5%	50V
C032	1-123-380-00	ELECT	1MF	20%	50V
C033	1-123-330-00	ELECT	22MF	20%	16V
C034	1-123-380-00	ELECT	1MF	20%	50V
C036	1-123-332-00	ELECT	47MF	20%	16V
C037	1-123-356-00	ELECT	10MF	20%	16V
C038	1-123-356-00	ELECT	10MF	20%	16V
C039	1-161-059-00	CERAMIC	0.047MF	20%	25V
C040	1-104-089-00	POLYSTYRENE	0.0033MF	5%	50V
C041	1-104-077-00	POLYSTYRENE	0.001MF	5%	50V
C042	1-161-059-00	CERAMIC	0.047MF	20%	25V
C043	1-161-055-00	CERAMIC	0.022MF	20%	25V
C044	1-136-244-11	FILM	0.1MF	2%	50V

The components identified by shading and mark ⚠ are critical for safety. Replace only with part number specified.

When indicating parts by reference number, please include the board name.

TU-60

Ref.No	Part No.	Description			Remark
C045	1-136-244-11	FILM	0.1MF	2%	50V
C046	1-123-308-00	ELECT	220MF	20%	10V
C047	1-136-243-11	FILM	0.047MF	2%	50V
C048	1-136-243-11	FILM	0.047MF	2%	50V
C101	1-102-963-00	CERAMIC	33PF	10%	50V
C102	1-102-963-00	CERAMIC	33PF	10%	50V
C103	1-123-381-00	ELECT	2.2MF	20%	50V
C104	1-161-059-00	CERAMIC	0.047MF	20%	25V
C105	1-161-271-00	CERAMIC	100PF	5%	50V
C106	1-130-495-00	MYLAR	0.1MF	5%	50V
C107	1-130-493-00	MYLAR	0.068MF	5%	50V
C108	1-130-493-00	MYLAR	0.068MF	5%	50V
C109	1-102-963-00	CERAMIC	33PF	10%	50V
C110	1-123-356-00	ELECT	10MF	20%	16V
C111	1-101-004-00	CERAMIC	0.01MF		50V
C112	1-123-356-00	ELECT	10MF	20%	16V
C201	1-101-004-00	CERAMIC	0.01MF		50V
C202	1-123-332-00	ELECT	47MF	20%	16V
C203	1-123-332-00	ELECT	47MF	20%	16V
C204	1-101-004-00	CERAMIC	0.01MF		50V
C205	1-123-356-00	ELECT	10MF	20%	16V
C206	1-123-380-00	ELECT	1MF	20%	50V
C207	1-123-356-00	ELECT	10MF	20%	16V
C208	1-101-004-00	CERAMIC	0.01MF		50V
C209	1-101-004-00	CERAMIC	0.01MF		50V
C221	1-123-330-00	ELECT	22MF	20%	16V
C405	1-101-880-00	CERAMIC	47PF	5%	50V

FILTER

CF001	1-527-840-00	FILTER, CERAMIC
CF002	1-527-839-00	FILTER, CERAMIC
CF101	1-527-822-00	OSCILLATOR, CERAMIC

CONNECTOR

CN001	1-560-893-00	PIN, CONNECTOR 5P
CN002	1-560-892-00	PIN, CONNECTOR 4P
CN003	1-560-892-00	PIN, CONNECTOR 4P
CN101	1-560-900-00	PIN, CONNECTOR 12P
CN102	1-560-892-00	PIN, CONNECTOR 4P
CN201	1-560-892-00	PIN, CONNECTOR 4P

TRIMMER

CT001	1-404-134-00	TRAP, CERAMIC (5.5MHZ)

DIODE

D001	8-719-911-19	DIODE 1SS119
D102	8-719-911-19	DIODE 1SS119
D103	8-719-812-31	DIODE TLR123
D104	8-719-812-31	DIODE TLR123
D105	8-719-812-31	DIODE TLR123
D106	8-719-812-32	DIODE TLY123
D107	8-719-812-33	DIODE TLG123A
D201	8-719-000-12	DIODE MC931

IC

IC001	8-759-909-08	IC TDA3541
IC002	8-759-909-54	IC TDA2546A
IC003	6-066-721-70	IC TDA3800GS
IC004	8-759-145-58	IC UPC4558C
IC101	8-759-602-05	IC M50160-019SP
IC102	8-759-600-66	IC M58653P
IC103	8-759-600-15	IC M54570L
IC201	8-759-157-40	IC UPC574J

COIL

L001	1-408-592-00	MICRO INDUCTOR 1.2UH
L002	1-408-591-00	MICRO INDUCTOR 1UH
L003	1-408-591-00	MICRO INDUCTOR 1UH
L004	1-408-600-00	MICRO INDUCTOR 5.6UH
L005	1-408-599-00	MICRO INDUCTOR 4.7UH
L006	1-408-597-00	MICRO INDUCTOR 3.3UH
L007	1-408-591-00	MICRO INDUCTOR 1UH
L008	1-408-591-00	MICRO INDUCTOR 1UH

TRANSISTOR

Q001	=>8-729-203-28	TRANSISTOR 2SC2216
Q002	=>8-729-245-83	TRANSISTOR 2SC2458
Q003	8-729-900-74	TRANSISTOR DTC143TS
Q004	8-729-900-74	TRANSISTOR DTC143TS
Q101	=>8-729-245-83	TRANSISTOR 2SC2458
Q102	=>8-729-245-83	TRANSISTOR 2SC2458
Q103	8-729-900-89	TRANSISTOR DTC144ES
Q201	8-729-900-89	TRANSISTOR DTC144ES
Q202	8-729-103-43	TRANSISTOR 2SB734
Q203	8-729-900-89	TRANSISTOR DTC144ES
Q404	8-729-900-80	TRANSISTOR DTC114ES

RESISTOR

R001	1-247-819-00	CARBON	330	5%	1/6W
R002	1-247-847-00	CARBON	4.7K	5%	1/6W
R003	1-247-839-00	CARBON	2.2K	5%	1/6W
R004	1-247-815-00	CARBON	220	5%	1/6W
R005	1-247-813-00	CARBON	180	5%	1/6W
R006	1-247-869-00	CARBON	39K	5%	1/6W

When indicating parts by reference number, please include the board name.

Ref.No	Part No.	Description				Remark
R009	1-247-843-00	CARBON	3.3K	5%	1/6W	
R010	1-247-853-00	CARBON	8.2K	5%	1/6W	
R011	1-247-879-00	CARBON	100K	5%	1/6W	
R012	1-247-871-00	CARBON	47K	5%	1/6W	
R013	1-247-871-00	CARBON	47K	5%	1/6W	
R014	1-247-831-00	CARBON	1K	5%	1/6W	
R015	1-247-813-00	CARBON	180	5%	1/6W	
R016	1-247-824-00	CARBON	510	5%	1/6W	
R017	1-247-821-00	CARBON	390	5%	1/6W	
R018	1-247-823-00	CARBON	470	5%	1/6W	
R019	1-247-835-00	CARBON	1.5K	5%	1/6W	
R020	1-247-829-00	CARBON	820	5%	1/6W	
R021	1-247-829-00	CARBON	820	5%	1/6W	
R022	1-247-829-00	CARBON	820	5%	1/6W	
R023	1-247-847-00	CARBON	4.7K	5%	1/6W	
R024	1-247-853-00	CARBON	8.2K	5%	1/6W	
R025	1-247-841-00	CARBON	2.7K	5%	1/6W	
R026	1-247-841-00	CARBON	2.7K	5%	1/6W	
R027	1-247-853-00	CARBON	8.2K	5%	1/6W	
R030	1-247-861-00	CARBON	18K	5%	1/6W	
R031	1-247-865-00	CARBON	27K	5%	1/6W	
R032	1-247-829-00	CARBON	820	5%	1/6W	
R033	1-215-461-00	METAL	47K	1%	1/6W	
R034	1-215-409-00	METAL	330	1%	1/6W	
R035	1-215-487-00	METAL	560K	1%	1/6W	
R036	1-247-831-00	CARBON	1K	5%	1/6W	
R037	1-215-460-00	METAL	43K	1%	1/6W	
R038	1-215-408-00	METAL	300	1%	1/6W	
R039	1-215-486-00	METAL	510K	1%	1/6W	
R040	1-247-831-00	CARBON	1K	5%	1/6W	
R041	1-247-147-00	CARBON	4.7K	5%	1/4W	
R042	1-247-841-00	CARBON	2.7K	5%	1/6W	
R101	1-247-163-00	CARBON	22K	5%	1/4W	
R102	1-247-163-00	CARBON	22K	5%	1/4W	
R103	1-247-163-00	CARBON	22K	5%	1/4W	
R104	1-247-155-00	CARBON	10K	5%	1/4W	
R105	1-247-155-00	CARBON	10K	5%	1/4W	
R106	1-247-155-00	CARBON	10K	5%	1/4W	
R107	1-247-155-00	CARBON	10K	5%	1/4W	
R108	1-247-155-00	CARBON	10K	5%	1/4W	
R109	1-247-155-00	CARBON	10K	5%	1/4W	
R111	1-247-130-00	CARBON	910	5%	1/4W	
R112	1-247-130-00	CARBON	910	5%	1/4W	
R113	1-247-163-00	CARBON	22K	5%	1/4W	
R114	1-247-163-00	CARBON	22K	5%	1/4W	
R115	1-247-163-00	CARBON	22K	5%	1/4W	
R116	1-247-163-00	CARBON	22K	5%	1/4W	
R117	1-247-163-00	CARBON	22K	5%	1/4W	
R118	1-247-891-00	CARBON	330K	5%	1/6W	
R119	1-247-839-00	CARBON	2.2K	5%	1/6W	
R120	1-247-155-00	CARBON	10K	5%	1/4W	
R121	1-247-839-00	CARBON	2.2K	5%	1/6W	
R122	1-247-135-00	CARBON	1.5K	5%	1/4W	
R123	1-247-133-00	CARBON	1.2K	5%	1/4W	

Ref.No	Part No.	Description				Remark
R124	1-247-179-00	CARBON	100K	5%	1/4W	
R125	1-247-163-00	CARBON	22K	5%	1/4W	
R128	1-247-853-00	CARBON	8.2K	5%	1/6W	
R201	1-247-167-00	CARBON	33K	5%	1/4W	
R202	1-247-863-00	CARBON	22K	5%	1/6W	
R203	1-247-847-00	CARBON	4.7K	5%	1/6W	
R204	1-247-831-00	CARBON	1K	5%	1/6W	
R206	1-247-843-00	CARBON	3.3K	5%	1/6W	
R207	1-247-851-00	CARBON	6.8K	5%	1/6W	
R208 ⚠	1-206-670-00	METAL OXIDE	1.8K	5%	2W	F
R209	1-247-167-00	CARBON	33K	5%	1/4W	
R210	1-247-163-00	CARBON	22K	5%	1/4W	
R221	1-247-839-00	CARBON	2.2K	5%	1/6W	
R222	1-247-863-00	CARBON	22K	5%	1/6W	
R223	1-247-871-00	CARBON	47K	5%	1/6W	
R224	1-247-891-00	CARBON	330K	5%	1/6W	

VARIABLE RESISTOR

RV001	1-228-750-00	RES, ADJ, CARBON 47K
RV002	1-228-995-00	RES, ADJ, METAL GLAZE 22K

SWITCH

S101	1-553-997-00	SWITCH, KEY BOARD
S102	1-553-997-00	SWITCH, KEY BOARD
S103	1-553-997-00	SWITCH, KEY BOARD
S104	1-553-997-00	SWITCH, KEY BOARD
S105	1-553-997-00	SWITCH, KEY BOARD
S106	1-553-997-00	SWITCH, KEY BOARD
S107	1-553-997-00	SWITCH, KEY BOARD
S201	1-516-226-00	SLIDE SWITCH

FILTER

SWF001	1-404-438-00	FILTER, SAW

TRANSFORMER

T002	1-404-068-00	COIL, VIF
T003	1-404-068-00	COIL, VIF
T004	1-404-378-00	I.F.T
T005	1-404-378-00	I.F.T
T006	1-404-135-00	COIL, SIF DISCRI
T007	1-404-378-00	I.F.T
T008	1-404-135-00	COIL, SIF DISCRI
T009	1-404-343-00	COIL, IF

****

The components identified by shading and mark ⚠ are critical for safety. Replace only with part number specified.

When indicating parts by reference number, please include the board name.

TR-14 CS-3 CS-4 RD-6 RD-7 HP-7 RL-18 TM-54

Ref.No	Part No.	Description	Remark
	♣:1-612-327-11	TR-14 BOARD	
		**********	
		VARIABLE RESISTOR	
RV701	1-228-603-00	RES, VAR, CARBON 100K	
		**********	
	♣:1-609-227-11	CS-3 BOARD	
		**********	
		CONNECTOR	
CN301	♣:1-564-029-00	PIN, CONNECTOR 4P	
		SWITCH	
S301	1-554-241-00	SWITCH, LEVER	
		**********	
	♣:1-609-228-11	CS-4 BOARD	
		**********	
		SWITCH	
S302	1-554-241-00	SWITCH, LEVER	
		**********	
	♣:1-610-401-00	RD-6 BOARD	
		**********	
	♣:3-681-157-00	HOLDER, RD	
		DIODE	
D001	=>8-719-921-03	DIODE GP-2S02B	
		**********	
	♣:1-610-402-00	RD-7 BOARD	
		**********	
		DIODE	
D001	=>8-719-921-03	DIODE GP-2S02B	
		**********	
	♣:1-612-324-11	HP-7 BOARD	
		**********	
		JACK	
JK401	1-507-833-00	JACK	

Ref.No	Part No.	Description			Remark
	♣:1-612-330-12	RL-18 BOARD			
		**********			
		CAPACITOR			
C801	1-123-356-00	ELECT	10MF	20%	16V
C802	1-123-356-00	ELECT	10MF	20%	16V
C803	1-161-039-00	CERAMIC	0.001MF	10%	25V
C804	1-161-039-00	CERAMIC	0.001MF	10%	25V
C805	1-123-356-00	ELECT	10MF	20%	16V
		CONNECTOR			
CN801	♣:1-564-017-00	PIN, CONNECTOR 7P			
CN802	♣:1-564-022-00	PIN, CONNECTOR 12P			
CN803	♣:1-564-017-00	PIN, CONNECTOR 7P			
		DIODE			
D801	8-719-911-19	DIODE 1SS119			
D802	8-719-911-19	DIODE 1SS119			
		IC			
IC801	8-759-135-80	IC UPC358C			
		RESISTOR			
R801	1-247-855-00	CARBON	10K	5%	1/6W
R802	1-247-855-00	CARBON	10K	5%	1/6W
R803	1-247-852-00	CARBON	7.5K	5%	1/6W
R804	1-247-852-00	CARBON	7.5K	5%	1/6W
R805	1-247-878-00	CARBON	91K	5%	1/6W
R806	1-247-878-00	CARBON	91K	5%	1/6W
R807	1-247-861-00	CARBON	18K	5%	1/6W
R808	1-247-861-00	CARBON	18K	5%	1/6W
R809	1-247-220-00	CARBON	150	5%	1/2W
R810	1-247-879-00	CARBON	100K	5%	1/6W
R811	1-247-791-00	CARBON	22	5%	1/6W
R812	1-247-879-00	CARBON	100K	5%	1/6W
R813	1-247-791-00	CARBON	22	5%	1/6W
		**********			
	♣:A-6728-995-A	TM-54 BOARD, COMPLETE			
		**********			
		CAPACITOR			
C101	1-123-382-00	ELECT	3.3MF	20%	50V
C102	1-161-025-00	CERAMIC	0.1MF	10%	25V
C103	1-161-061-00	CERAMIC	0.068MF	10%	50V
C104	1-161-025-00	CERAMIC	0.1MF	10%	25V
C105	1-125-299-00	**********	47000MF		5.5V
C106	1-123-357-00	ELECT	22MF	20%	50V
C107	1-102-959-00	CERAMIC	22PF	5%	50V
C108	1-123-318-00	ELECT	33MF	20%	16V
C109	1-161-024-00	CERAMIC	0.082MF	10%	25V
		CONNECTOR			
CN102	♣:1-564-002-00	PIN, CONNECTOR 3P			
CN104	♣:1-564-006-11	PIN, CONNECTOR 7P			
CN106	♣:1-564-027-00	PIN, CONNECTOR 2P			

When indicating parts by reference number, please include the board name.

Ref.No	Part No.	Description				Remark
		TRIMMER				
CT101	1-141-022-21	CAP, TRIMMER, CERAMIC	20PF			
		DIODE				
D101	8-719-812-31	DIODE TLR123				
D102	8-719-911-19	DIODE 1SS119				
D103	8-719-911-19	DIODE 1SS119				
D104	8-719-191-07	DIODE RD9.1E-B				
D105	8-719-911-19	DIODE 1SS119				
D106	8-719-911-19	DIODE 1SS119				
D107	8-719-911-19	DIODE 1SS119				
		IC				
IC101	8-759-103-16	IC UPD7519G-132				
		TRANSISTOR				
Q101	=>8-729-245-83	TRANSISTOR 2SC2458				
Q102	=>8-729-245-83	TRANSISTOR 2SC2458				
Q103	=>8-729-204-83	TRANSISTOR 2SA1048-GR				
Q104	=>8-729-245-83	TRANSISTOR 2SC2458				
		RESISTOR				
R101	1-247-875-00	CARBON	68K	5%	1/6W	
R102	1-247-879-00	CARBON	100K	5%	1/6W	
R103	1-247-855-00	CARBON	10K	5%	1/6W	
R104	1-247-855-00	CARBON	10K	5%	1/6W	
R105	1-247-855-00	CARBON	10K	5%	1/6W	
R106	1-247-855-00	CARBON	10K	5%	1/6W	
R107	1-247-855-00	CARBON	10K	5%	1/6W	
R108	1-247-855-00	CARBON	10K	5%	1/6W	
R109	1-247-855-00	CARBON	10K	5%	1/6W	
R110	1-247-855-00	CARBON	10K	5%	1/6W	
R111	1-247-855-00	CARBON	10K	5%	1/6W	
R112	1-247-867-00	CARBON	33K	5%	1/6W	
R113	1-247-872-00	CARBON	51K	5%	1/6W	
R114	1-247-886-00	CARBON	200K	5%	1/6W	
R115	1-247-903-00	CARBON	1M	5%	1/6W	
R116	1-247-868-00	CARBON	36K	5%	1/6W	
R117	1-247-874-00	CARBON	62K	5%	1/6W	
R118	1-247-869-00	CARBON	39K	5%	1/6W	
R119	1-247-879-00	CARBON	100K	5%	1/6W	
R120	1-247-855-00	CARBON	10K	5%	1/6W	
R121	1-247-867-00	CARBON	33K	5%	1/6W	
R122	1-247-863-00	CARBON	22K	5%	1/6W	
R123	1-247-831-00	CARBON	1K	5%	1/6W	
R124	1-247-843-00	CARBON	3.3K	5%	1/6W	
R125	1-247-879-00	CARBON	100K	5%	1/6W	
R126	1-247-879-00	CARBON	100K	5%	1/6W	
R127	1-247-879-00	CARBON	100K	5%	1/6W	
R128	1-247-879-00	CARBON	100K	5%	1/6W	
R129	1-247-804-00	CARBON	75	5%	1/6W	

Ref.No	Part No.	Description	Remark
		CRYSTAL	
X101	1-527-647-00	OSCILLATOR, CRYSTAL	
**********			
♦	A-6728-996-A	TM-55 BOARD, COMPLETE	
		**********	
♦	3-684-005-01	HOLDER (S), LED	
♦	3-684-030-01	HOLDER, INDICATION TUBE	
	7-685-134-14	SCREW +P 2.6X8 TYPE2 NON-SLIT	
		DIODE	
D201	8-719-812-31	DIODE TLR123	
D202	8-719-812-31	DIODE TLR123	
D203	8-719-812-31	DIODE TLR123	
D204	8-719-812-31	DIODE TLR123	
		INDICATOR TUBE	
FL201	1-519-315-11	INDICATOR TUBE, FLUORESCENT	
		RESISTOR	
R201	1-247-815-00	CARBON 220 5% 1/6W	
R202	1-247-815-00	CARBON 220 5% 1/6W	
		SWITCH	
S201	1-553-997-00	SWITCH, KEY BOARD	
S202	1-553-997-00	SWITCH, KEY BOARD	
S203	1-553-997-00	SWITCH, KEY BOARD	
S204	1-553-997-00	SWITCH, KEY BOARD	
S205	1-553-997-00	SWITCH, KEY BOARD	
S206	1-553-997-00	SWITCH, KEY BOARD	
S207	1-553-997-00	SWITCH, KEY BOARD	
S208	1-553-997-00	SWITCH, KEY BOARD	
S209	1-553-997-00	SWITCH, KEY BOARD	
S210	1-553-997-00	SWITCH, KEY BOARD	
S211	1-553-997-00	SWITCH, KEY BOARD	
S212	1-553-997-00	SWITCH, KEY BOARD	
S213	1-553-997-00	SWITCH, KEY BOARD	
S214	1-553-997-00	SWITCH, KEY BOARD	
S215	1-554-375-00	SWITCH, PUSH	
**********			
♦	1-612-325-11	SV-12 BOARD	
		**********	
		SLIDE RES VAR	
RV501	1-230-414-11	RES, VAR, SLIDE 20K/20K	
**********			

When indicating parts by reference number, please include the board name.

SW-31 | N | LM-8 | DM-10

Ref.No	Part No.	Description				Remark
	♦:1-612-326-12	SW-31 BOARD				
		**********				
		DIODE				
D601	8-719-911-19	DIODE 1SS119				
		RESISTOR				
R601	1-247-807-00	CARBON	100	5%	1/6W	
		SWITCH				
S601	1-553-754-00	SWITCH, SLIDE				
S602	1-553-716-00	SWITCH, SLIDE				
S603	1-553-716-00	SWITCH, SLIDE				
S604	1-553-716-00	SWITCH, SLIDE				
S605	1-553-716-00	SWITCH, SLIDE				
S606	1-553-716-00	SWITCH, SLIDE				
**********						
	♦:1-606-794-00	N BOARD				
		********				
		CAPACITOR				
C001	1-123-617-00	ELECT	10MF	20%	16V	
C002	1-123-617-00	ELECT	10MF	20%	16V	
C003	1-123-617-00	ELECT	10MF	20%	16V	
C004	1-161-057-00	CERAMIC	0.033MF	10%	25V	
C005	1-106-184-00	MYLAR	0.0033MF	5%	50V	
C006	1-123-821-00	ELECT	47MF	20%	16V	
		DIODE				
D001	8-719-110-32	DIODE PH302B				
		IC				
IC001	=>8-759-102-84	IC UPC1373HA				
		COIL				
L001	1-404-310-00	COIL				
**********						
	♦:1-605-071-00	LM-8 BOARD				
		**********				
		CAPACITOR				
C101	1-161-057-00	CERAMIC	0.033MF	10%	50V	
C102	1-161-057-00	CERAMIC	0.033MF	10%	50V	

Ref.No.	Part No.	Description				Remark
		COIL				
L101	1-408-120-00	MICRO INDUCTOR 18UH				
L102	1-408-120-00	MICRO INDUCTOR 18UH				
		RESISTOR				
R101	⚠ 1-206-640-00	METAL OXIDE	100	5%	2W F	
**********						
	♦:1-612-960-12	DM-10 BOARD				
		**********				
		CAPACITOR				
C301	1-108-583-00	MYLAR	0.015MF	5%	50V	
C302	1-108-563-00	MYLAR	0.0022MF	5%	50V	
C303	1-108-602-00	MYLAR	0.091MF	5%	50V	
C304	1-101-005-00	CERAMIC	0.022MF		50V	
C305	1-108-583-00	MYLAR	0.015MF	5%	50V	
C306	1-108-563-00	MYLAR	0.0022MF	5%	50V	
C307	1-108-602-00	MYLAR	0.091MF	5%	50V	
C308	1-101-005-00	CERAMIC	0.022MF		50V	
		COIL				
L301	1-407-177-XX	MICRO INDUCTOR 470UH				
L302	1-407-177-XX	MICRO INDUCTOR 470UH				
		TRANSISTOR				
Q301	8-729-178-54	TRANSISTOR 2SC2785				
Q302	8-729-178-54	TRANSISTOR 2SC2785				
		RESISTOR				
R301	1-247-824-00	CARBON	510	5%	1/6W	
R302	1-247-835-00	CARBON	1.5K	5%	1/6W	
R303	1-247-843-00	CARBON	3.3K	5%	1/6W	
R304	1-247-848-00	CARBON	5.1K	5%	1/6W	
R305	1-247-824-00	CARBON	510	5%	1/6W	
R306	1-247-835-00	CARBON	1.5K	5%	1/6W	
R307	1-247-843-00	CARBON	3.3K	5%	1/6W	
R308	1-247-848-00	CARBON	5.1K	5%	1/6W	
**********						

The components identified by shading and mark ⚠ are critical for safety. Replace only with part number specified.

When indicating parts by reference number, please include the board name.

AF-3 Board Adjustment after replacement

This adjustment should be performed when the AF-3 board whose end of part No. is -13 has been replaced with the board whose end of part No. is -14 or -15.

Adjustment Method on AF-3 Board Replacement

Note: • Set the LPF switch to OFF. • Set the BETA Hi-Fi switch to AUTO. • ( ) is Rch.

Adjustment Method	Mode	Input Signal	Output Signal	Equipment Required	Standard	Adjustment Point
1. E-E Input Level Adjustment	REC	• Set the REC level control volume to the center click position. • Input a −10dBs, 400Hz signal to the AUDIO IN.	TP006 (TP007) on AF-3 board	Audio Level Meter	−26.5 ± 0.1dB	AF-3 Board RV022 (RV023)
2. Level Meter Adjustment	REC	• Set the REC level control volume to the center click position. • Input a −10dBs, 400Hz signal to the AUDIO IN.	• Connect a digital voltmeter to pin ④ (pin ⑤) of level meter. • Adjust the voltage with RV020 (RV021) on AF-3 board. • Confirm that the LEDs from first to seventh light up. • Confirm that the LEDs light up and go off correctly when the level display sw is turned on and off.	Digital Voltmeter	1.75 ± 0.05V	AF-3 Board RV020 (RV021)
3. AFM Record Current Adjustment	REC	• Set up the unit a no signal state. • Set the REC LEVEL control volume to 0 position.	• Connect an oscilloscope to pin ⑤ of CN103 on RP-17 board. 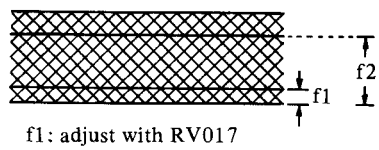 f1: adjust with RV017 f2: adjust with RV015	oscilloscope	f1: 55 ± 2mVp-p f2: 200 ± 5mVp-p	AF-3 Board RV017 (RV015)
4. RF Input Level Adjustment Note: Make this adjustment after the AFM record current adjustment has been performed.	REC/PB	• Set the tracking control volume to the center click position. • Record with no signal input and playback the recorded part. (no modulation)	• Connect an oscilloscope to TP004 on AF-3 board. • Adjust RV101 for Ach and RV102 for Bch on RP-17 board. 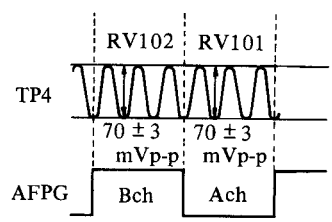 	oscilloscope	70 ± 3mVp-p	RP-17 Board RV101 RV102

CORRECTION

ADJUSTMENT

: Corrected portion

Page 45

1) Drum Free Speed Adjustment (SS-28 Board)

[Alignment method]

Adjust to 500 μsec ± 10 μsec with RV301. (See Fig. 5-7.)

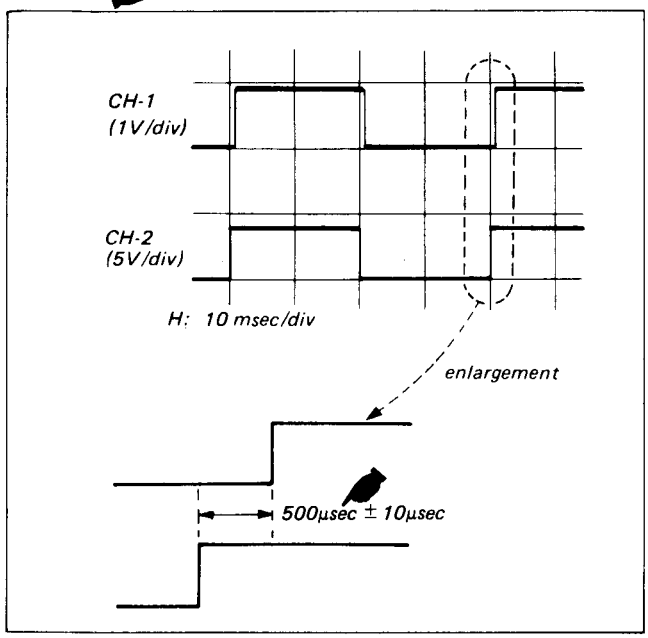

Fig. 5-7. Drum free speed adjustment

Page 49

7) White Clip Adjustment (YC-28 Board)

Mode: E-E

Signal: GRAY SCALE

Digital voltmeter: Collector of Q038

[Adjustment method]

Adjust RV013 so that white overshoot becomes 200% ±10%.

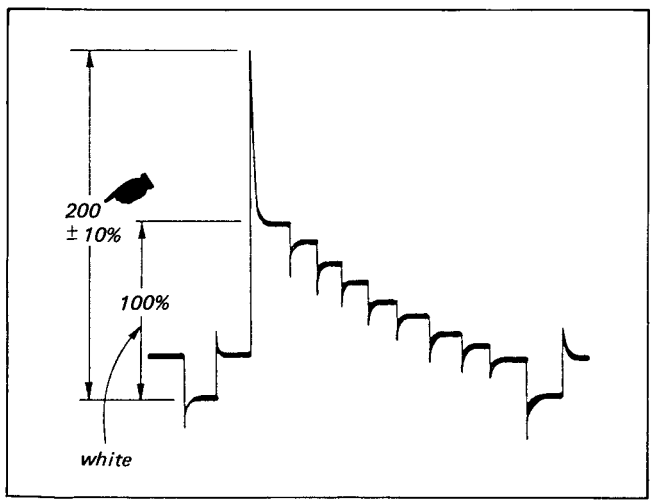

8) Y Record Current Adjustment (RP-17 Board)

Mode: Record

Signal: None

Oscilloscope: Pin ① of CN001 (The last digits of the part number of RP-17 board is -11.)

TP001 (The last digits of the part number of RP-17 board is -12.)

[Adjustment method]

Adjust to 3.2V ±0.05Vp-p with RV003. (See Fig. 5-19)

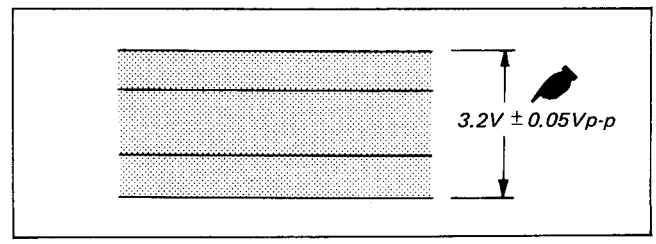

Fig. 5-19. Y record current adjustment

10) AFC Adjustment (YC-28 Board)

[Adjustment method]

i) Rotate RV001 counterclockwise full seen from the pattern side.

ii) Adjust to 4.5 ±0.1 V dc using RV007. (See Fig. 5-20)

iii) Check the frequency of IC006 pin ㉑ (VCO output) by a frequency counter, and confirm that the frequency is the same as shown below.

5484375Hz . . . when CN008 pin ② is "L"

5515625Hz . . . when CN008 pin ② is "H"

Note: Make sure to adjust SECAM ACK after completing this adjustment. (Refer to 2) on page 54.)

Page 50

13) Chroma Record Current Adjustment (YC-28 Board)

[Adjustment method]

Adjust to 165mVp-p ±5mVp-p with RV008. (See Fig. 5-23.)

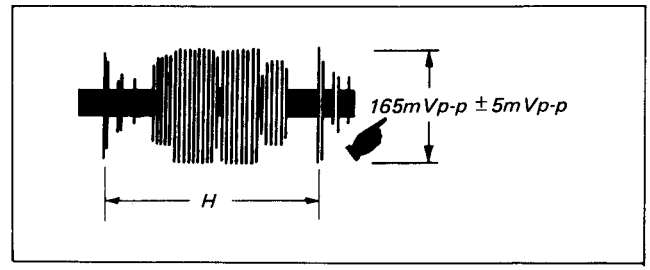

Fig. 5-23. Chroma record current adjustment

Page 50

1) Playback Frequency Characteristic Adjustment (RP-17 Board)

[Adjustment method]

i) Rotate the tracking knob to make 2 MHz to be maximum.

ii) Rotate RV004 to adjust the 2 MHz level of Bch to be less than ±20 mV to the 2 MHz level of Ach.

iii) Set the trigger slope to −(+).

iv) Adjust the 5.2MHz amplitude to 56 − 62% of the 2MHz amplitude with RV002 (RV001).

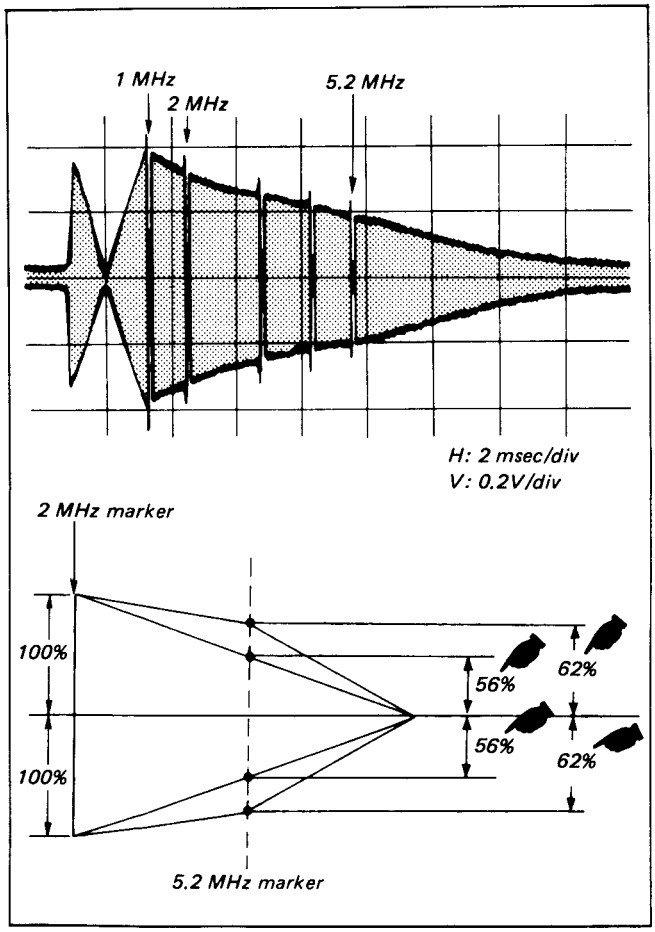

Fig. 5-24. Playback amplifier frequency characteristic adjustment

Page 51

2) Expand Adjustment (YC-28 Board)

[Adjustment method]

Adjust to 0.45 ±0.01V dc using RV020.

Note: Adjust more than 30sec after turning on the power switch.

Page 55

5-6-1. Normal Audio System Adjustment (AM-5 Board)

Note: Set the BETA HI-FI switch to NORM.

[Adjustment method]

1. ACE head adjustment... See "Mechanical Adjustment"
2. Playback frequency characteristic adjustment
3. Playback output level adjustment
4. Bias oscillator check
5. Record current adjustment
6. Record bias adjustment
7. Overall frequency characteristic check
8. AGC output check
9. Overall S/N check
10. Overall distortion check

5. Record Bias Adjustment

6. Record Current Adjustment

Page 56

5-6-2. BETA Hi-Fi Audio System Adjustment (AF-3 Board)

Note: Set the LPF switch to OFF.
Set the BETA hi-fi switch to AUTO.
( ) is Rch.

[Adjustment method]

1. E-E input level adjustment
2. Dynamic emphasis adjustment
3. AFM carrier frequency adjustment
4. AFM record current adjustment
5. Level meter level adjustment
6. RF input level adjustment
7. Playback level adjustment
8. Playback level balance adjustment
9. AFM deviation adjustment
10. Overall frequency characteristic check
11. Overall distortion check
12. Overall S/N check

Page 57

4. AFM Record Current Adjustment

5. Level Meter Adjustment

6. RF Input Level Adjustment

NOTE: Make this adjustment after checking that the AFM record current has been adjusted.
Tracking control knob: center click position.

7. Playback Level Adjustment

8. Playback Ach and Bch Level Balance Adjustment

Page 56

9. AFM Deviation Adjustment

SL-HF100 Series

OPERATION MANUAL

PHOTO: SL-HF100ES

July, 1984

711B CHASSIS

The mechanical operation of the SL-HF100 series is generally the same as that of the SL-C30E series.
Refer to operation manual of SL-C30E/C30UB, part number 9-972-245-11.

Beta
VIDEO CASSETTE RECORDER
SONY

MICROFILM

Consumer VIDEO

TABLE OF CONTENTS

Section	Title	Page
1. VIDEO CIRCUIT		
1-1.	YC-28 Board	6
	1. Y Recording System	6
	2. Y Playback System	7
	3. Chroma REC System (PAL)	9
	4. Chroma REC System (SECAM)	10
	5. Chroma PB System (PAL)	11
	6. Chroma PB System (SECAM)	13
	7. AV Connector Output	13
	8. AFC, APC System (PAL)	13
	9. AFC System (SECAM)	14
1-2.	RP-17 Board	15
	1. Video Signal Recording System	15
	2. Video Signal PB System	16
	3. RF Modulator AGC Circuit	16
2. SYSTEM CONTROL		
2-1.	Tape End Detection Circuit	16
2-2.	Audio Muting Signal	16
3. SERVO CIRCUIT		
3-1.	Reel Motor Control Circuit	19
3-2.	LOADING/THREADING Motor Circuit	20
4. AUDIO CIRCUIT		
4-1.	β HiFi Audio Circuit	23
4-1-1.	β HiFi PAL System	23
	1. Deep Layer Recording System	23
	2. Carrier Frequency	23
	3. Modulation Factor	23
	4. β HiFi PAL Audio Head	23
	5. Rotary Transformer	24
	6. AF PG Signal	24
	7. Dynamic Emphasis Circuit	25
	8. Recording Only Audio Signal	25
4-1-2.	Flow of Signal	26
	1. Signal Flow During Recording	26
	2. Signal Flow During Playing Back	30
	3. Muting Circuit	33
	4. Dropout Detection Circuit	33
4-2.	Normal Audio Circuit	34
	1. Input Selection	34
	2. E-E Audio Signal	34
	3. AUDIO Mute 2 Signal	34
5. TIMER CIRCUIT		
5-1.	$\overline{IR}$ Signal	34
5-2.	AV CONT Signal	34
6. TUNER CIRCUIT		
6-1.	Signal System	35
6-2.	Tuning System	36
6-3.	Other Circuits	37
7. POWER SUPPLY CIRCUIT		
7-1.	Rectifier Circuit	38
7-2.	Start Circuit	38
7-3.	Self-Oscillation Stop Circuit	38
7-4.	Power Supply Control Circuit	38
7-5.	Control Circuit	39
	1. Control of Output Voltage	39
	2. Overcurrent Detection	39
	3. Overvoltage Detection	39
	4. Other Power Supply Output	39
	5. Power Circuit Protection in Power Output Terminal Shorting	39

1. VIDEO CIRCUIT

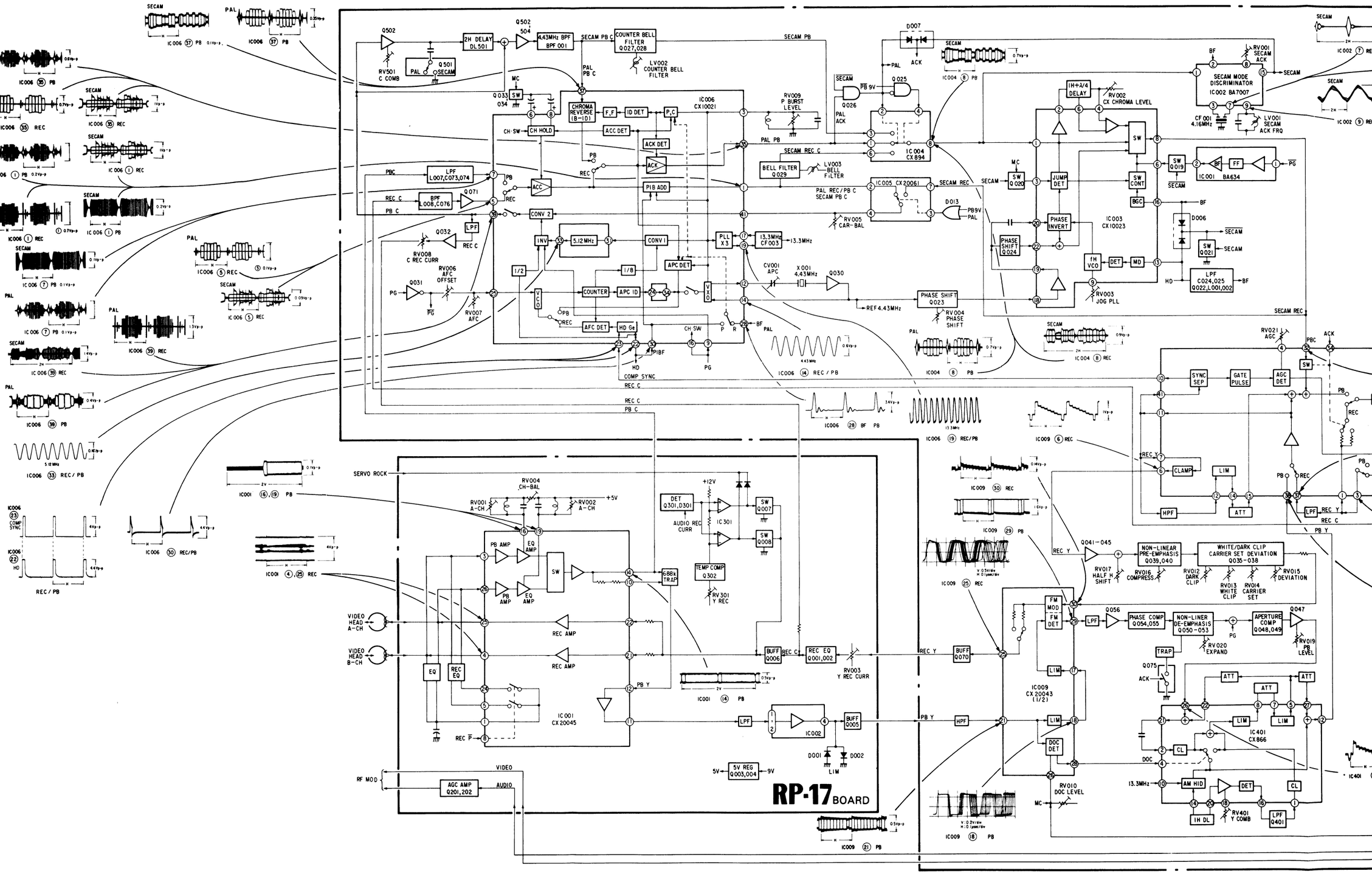

Fig. 1-1 Video Circuit Block Diagram

YC-28 BOARD

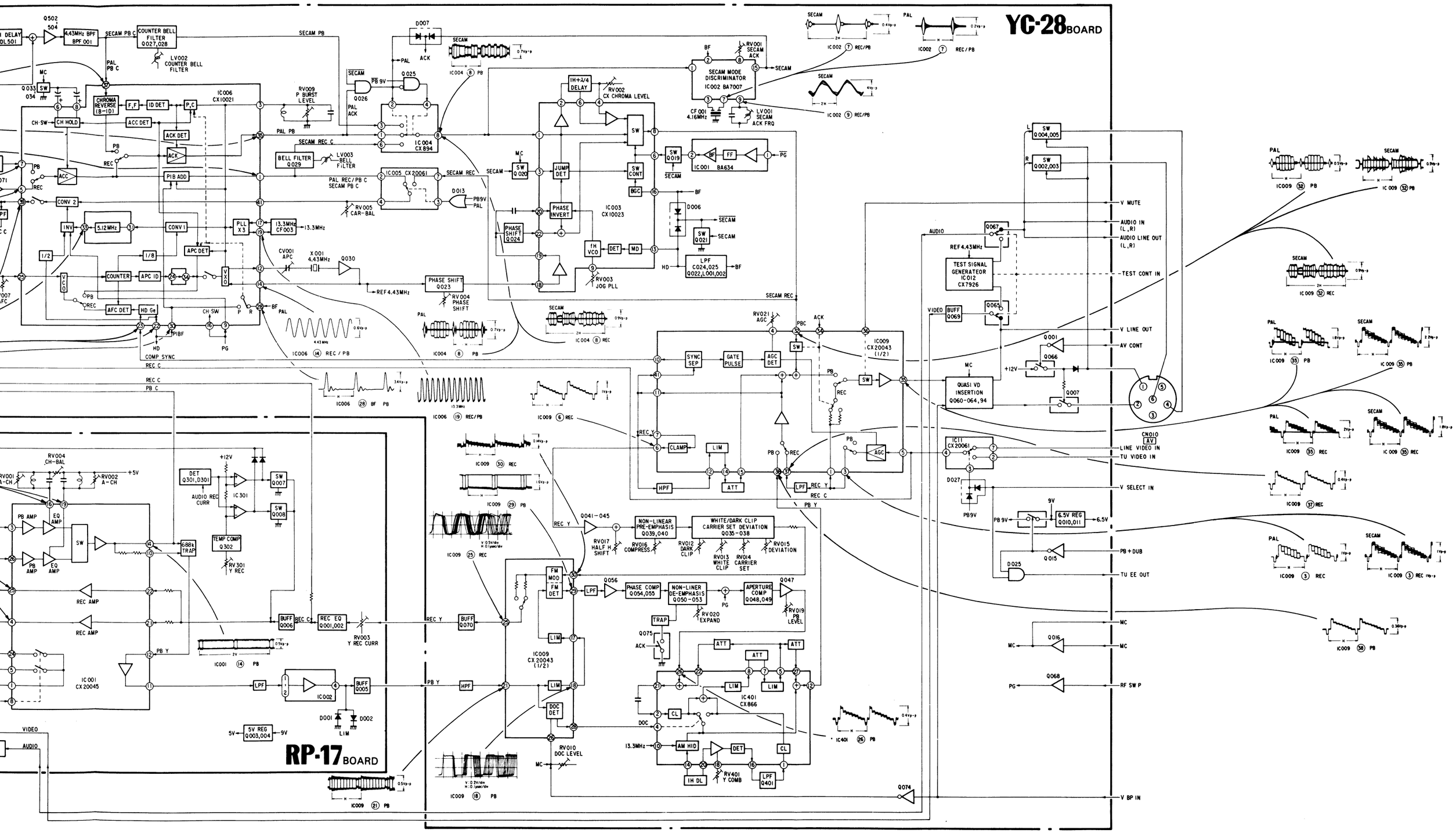

Fig. 1-1 Video Circuit Block Diagram

The operation of the SL-HF100ES video circuit is generally the same as that of the SL-C30 series circuit. Some chips of the latter are integrated into single chips, and some discrete circuits are replaced by ICs.

	SL-C30	SL-HF100ES
AGC, SYNC SEP	CX867	CX20043
NOISE CANCELL, Y/C MIX, MUTING	CX868	
MOD/DEMOD, DOC	CX864	
ACC, APC, ACK	CX869	CX10021
FREQUENCY CONVERTER, VCO, COUNTER	CX882	
COUNTER	CX7945	
AFDR, VCC or VXO	CX20008, CX870A	
JOG CHROMA, 1H EXCHANGE	discreet	CX10023
VIDEO REC/PB AMP	CX862, CX134A	CX20045

Table 1-1

1-1. YC-28 Board

1. Y Recording System

The video signals input to the LINE IN terminal are input to IC011 at pin ⑦ , and output at pin ④ . In the IC, the input video signals are switched over with the tuner video signals input at pin ② , by the VIDEO SELECT +PB signal. The signals output from pin ④ of IC011 are divided into two parts, one part being reinput to pin ⑤ of chroma processing IC006 via the band pass filter to become recording chroma signals, and the other part being input to pin ⑤ of IC009 for AGC processing and subsequent outputting from pin ③ .

The signals output from pin ③ of IC009 are divided into two parts, one part being reinput to IC009 through pin ① , and for outputting to the video output circuit via the REC/PB select switch for use as the video signals for the E-E system, and the other part being reinput to IC009 through pin ㊲ after the elimination of the chroma signals through low pass filter (LPF001), for outputting as the recording Y signals from pin ⑪ via the REC/PB select switch. This signal is further divided into two parts, one part being branched to the sync separation circuit through pin ㊶ , and the other part being reinput through pin ⑦ for sync tip clamping and then for outputting to the pre-emphasis circuit from pin ⑥ . This sync tip clamping is designed to fix the sync tip frequency of the Y-FM signals by fixing the sync tip level of the Y signals input to the pre-emphasis circuit.

The signal input to the pre-emphasis circuit flows through Q045, Q042, Q041 in this sequence and is shifted by ½f_H by PG signals (RF SW pulse signal). Then, the signal is given pre-emphasis non-linearly by Q040, and input to the base of Q038. RV016 serves to set the signal compression by setting the bias voltage applied to D019 and D020 via Q039.

The signal input to the Q038 base is input to IC009 through pin ㉚ from the Q038 collector, and current-drives the FM modulator in IC009.

RV015 is used to set the frequency deviation, RV014 the sync tip carrier frequency, RV012 the dark clip level, and RV037 the white clip level.

The signal frequency-modulated in IC009 (Y-FM signals) is output from pin ㉓ to the RP-17 board via Q070.

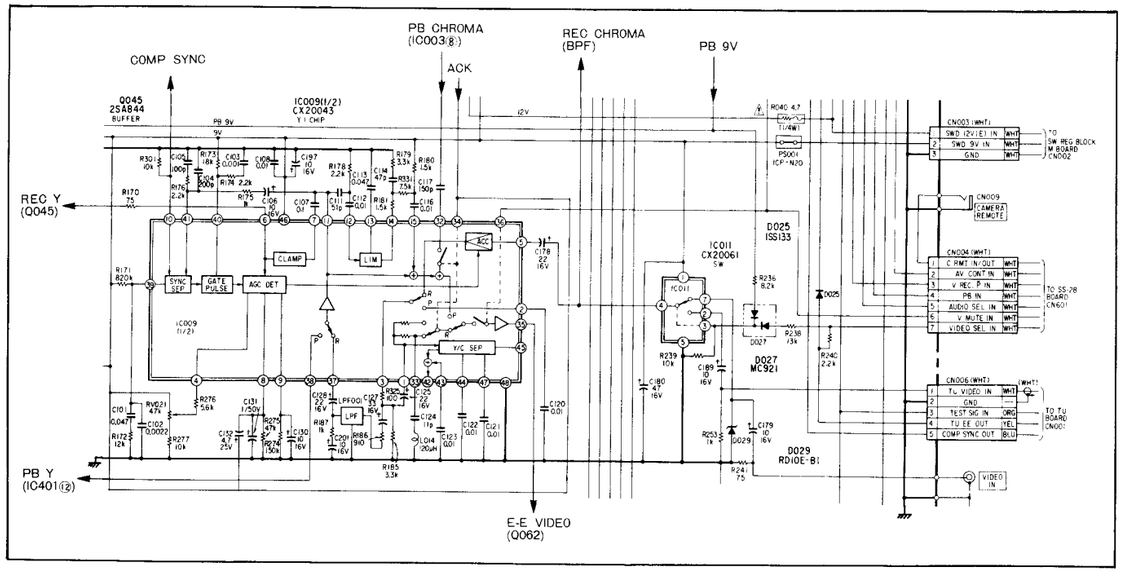

Fig. 1-2 Input Select, AGC, and Sync Separation Circuit Diagram

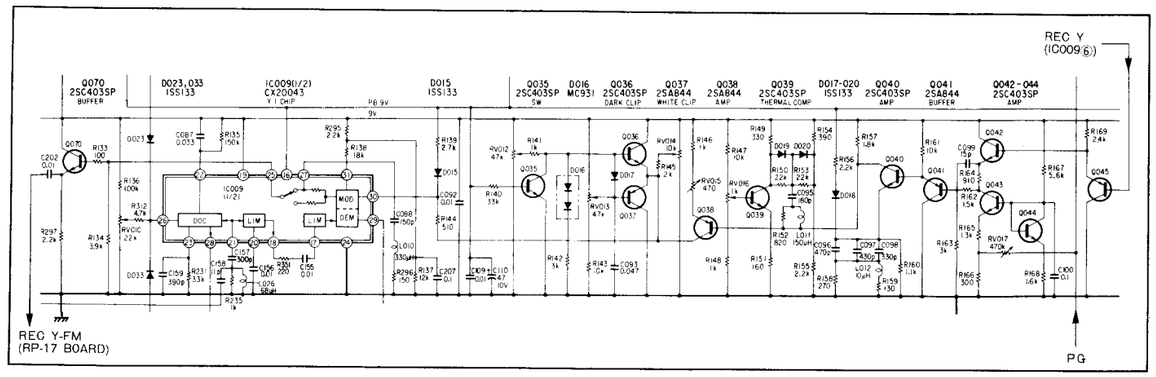

Fig. 1-3 PRE-EMPHASIS and FM Modulation Circuit Diagram

2. Y Playback System

The Y-FM signal amplified by the RP-17 board is input to IC009 through pin ㉑ , and is output through pin ⑱ via a limiter and then, reinput through pin ⑰ . Then, the signal is input to the FM demodulator via a limiter, and is output from pin ㉙ as Y signals. The Y signal flows through the low-pass filter consisting of L021 through L023, C144 through C147, and Q056, and enter the equalizer circuit consisting of Q054 and Q055, where the phase deformation caused by the low-pass filter is corrected. The L and C connected to the collector of Q053 are a 4.43MHz trap that operates during color playback.

Subsequently, the Y signal enter the de-emphasis circuit, where it is amplified by Q053 and Q052, and then, de-emphasized non-linearly by Q051.

RV020 sets the bias voltage to be applied to D021 and D022 via Q050, to set the expand quantity of the Y signal. To the collector of Q051, the PG signal voltage divided by R281 and R205 is applied to cancel the field-by-field DC level fluctuation caused by ½f_H shift for recording.

The signal is further apature compensated by Q048 and Q049, and is input to IC401 through pin ㉖ via Q047. PV019 is for setting the playback Y signal level.

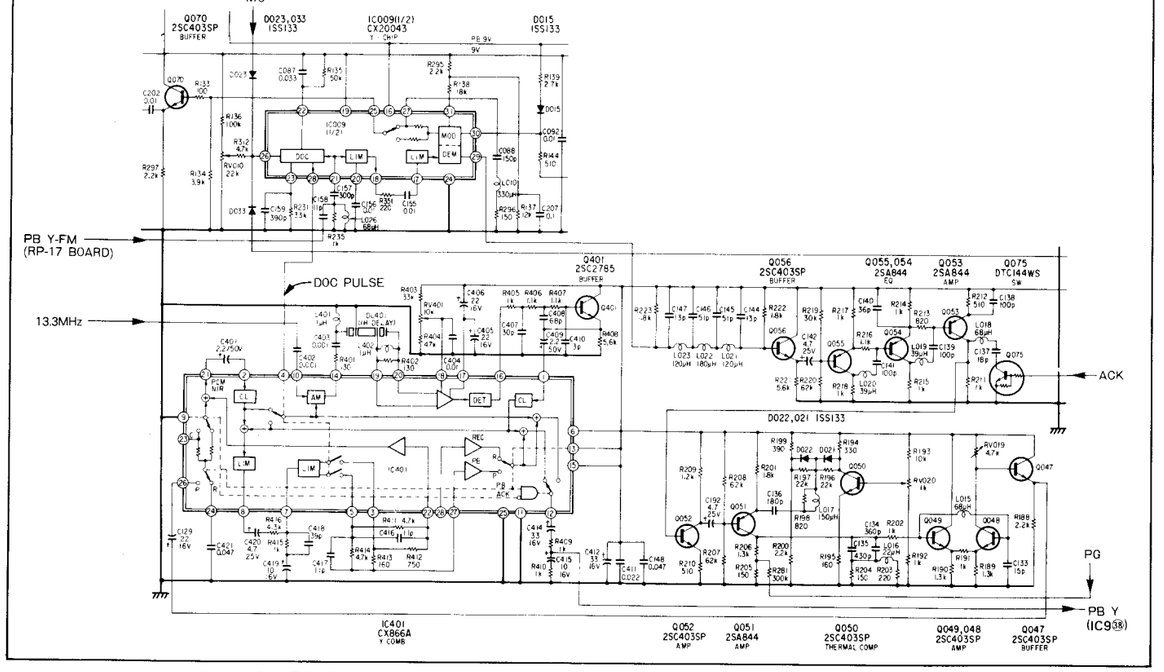

Fig. 1-4 FM De-Modulation, De-Emphasis and Y-COMB Filter Circuit Diagram

IC401 contains a Y-COMB filter and a dropout compensation circuit. Here, the Y signal line correlation characteristics are utilized to cancel noise, cancel crosstalk, and compensate for dropout. While noise is canceled from the Y signal immediately after FM demodulation with the SL-C30 series, noise is cancelled in the SL-HF100ES from the perfect Y signals after de-emphasis, for better noise cancelling effect at the contour lines of the picture.

The Y signal input to IC401 at pin ㉕ is output once from pin ㉑ , and reinput through pin ② , and clamped. Then, it is divided into two parts, with one part input to the subtraction circuit (MIX4), and the other further divided into two parts after passing through the DOC switch. One part is the main signal part, for input to the subtraction circuit (MIX3), and the other is converted into an AM signal using the 13.3MHz (4.43MHz x 3) wave input at pin ⑩ as the carrier, for output from pin ⑭ . This AM signal is then delayed by 1H in DL401, and input to pins ⑳ and ⑲ . Then, its level is adjusted by the AGC circuit, then, detected, then, output from pin ⑯ , then, filtered by the low pass filter Q401, then, input to pin ①

of IC401, then, clamped, and then, input to the DOC switch mentioned above, and at the same time, also input to the subtraction circuit (MIX4). The DOC switch switches automatically to the 1H delay side when a dropout occurs to turn the DOC pulses to H. As the dropout is compensated for in the Y signal stage in the SL-HF100ES, unlike the SL-C30 Series circuits in which the dropout compensation is made in the Y-FM stage, the switching noise is less conspicuous. In the subtraction circuit (MIX4), the 1H delayed Y signal is subtracted from the undelayed Y signal. This output signal of the subtraction circuit (MIX4) is output through pin ⑧ via the limiter, and reinput from pin ⑦ after passing through the filter, then, output via another limiter from pins ⑤ and ③ , and then, input to pin ㉗ after phase compensation. Since this signal consists almost entirely of the noise component and the cross-talk component from the adjacent track, when this signal is subtracted from the main signal in the subtraction circuit (MIX3), the Y signal output from pin ⑫ of IC401 is free from noise and cross-talk.

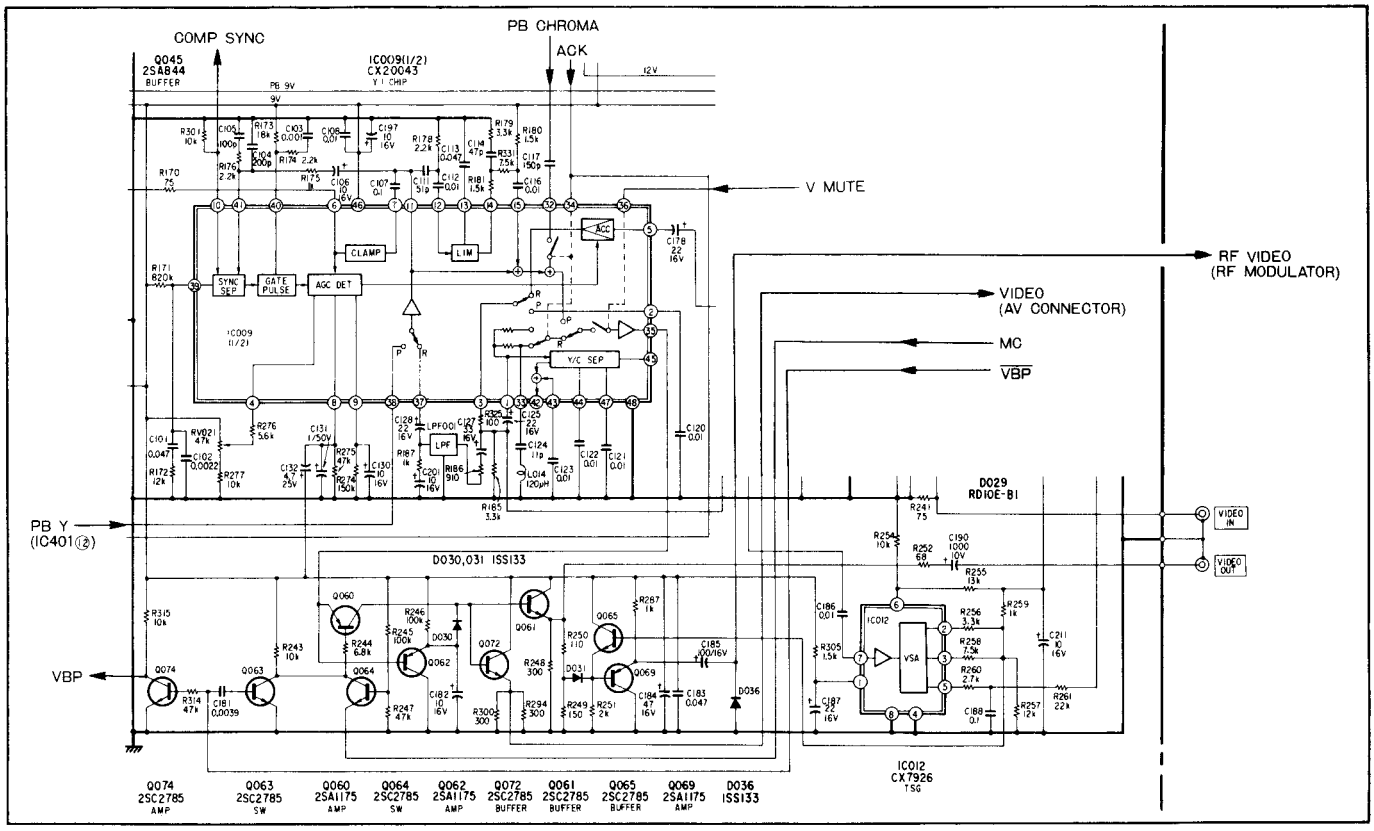

Fig. 1-5 Noise Canceler, Y/C Mix and Video Out Circuit Diagram

The output signal from pin ⑫ of IC401 is input to IC009 through pin ㊳ , passes through the REC/PB select switch, input to the noise cancel circuit, freed of high range component from the Y signal by the high pass filter connected across pins ⑪ and ⑫ of IC009, and have the noise component removed by a limiter. This noise component is passed through a compensation circuit across pins ⑭ and ⑮ , and added to the subtraction circuit to subtract it from the main signal for noise cancellation. The noise-cancelled Y signal is mixed with the chroma signal input to pin ㉜ , and output from pin ㉟ after flowing through the REC/PB select circuit, muting circuit, and the buffer circuit. The signal is then output from the VIDEO OUT terminal via the quasi VD insertion circuit of Q060 through Q064. The quasi VD is inserted only during a speed-change playback by an MC signal.

3. Chroma REC System (PAL)

The video signal is output from pin ④ of IC011. From this signal, the 4.43MHz chroma signal is taken out through BPF. The chroma signal is input to IC006 via Q071 through pin ⑤ . In IC006, the chroma signal enters the ACC amp via the REC/PB switch for ACC processing. Then, the signal enters the PILOT BURST ADD circuit where a pilot burst signal is inserted in the sync signal portion, and output from pin ① . This chroma signal flows through pins ② and ④ of the PAL/SECAM select switch, and then, reenters IC006 through pin ㊶ . In IC006, the signal is converted to a low band convert chroma signal (C-RF signal) by the converter II circuit, and output from pin ㊴ . The C-RF signal flows through the low pass filter Q032, set for a recording current level by RV008, and is output to the RP-17 board via the buffer Q103.

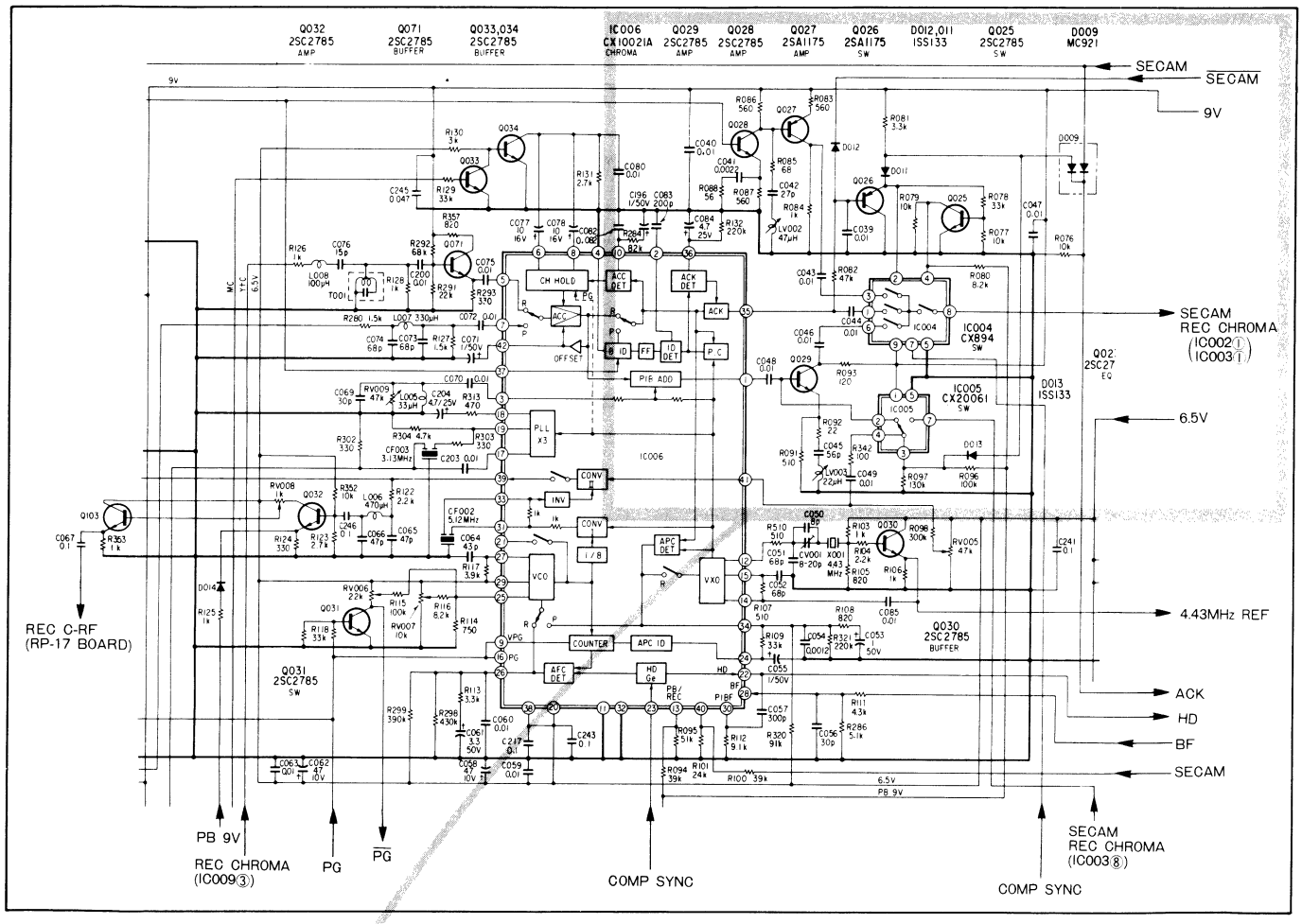

Fig. 1-6 CHROMA Process Circuit Diagram

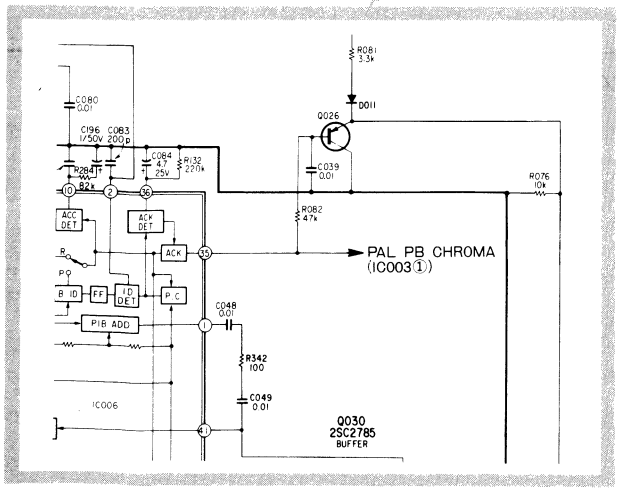

SL-HF100E
SL-HF100UB
SL-HF100SA
SL-HF100AS

4. Chroma REC System (SECAM) . . . SL-HF100ES/EC Model

The circuit operation is the same as the PAL signal up to the ACC processing. After the ACC processing in IC006, the signal passes the PILOT BURST ADD circuit without any change, and is output from pin ① . This signal is brought back to a perfect FM signal without amplitude change in the bell filter of Q029, and is input to the PAL/SECAM select switch IC004, at pin ⑥ and output from pin ⑧ . This output of pin ⑧ in IC004 is then input to pin ① of IC003 and pin ① of IC002. IC002 discriminates between PAL and SECAM. IC003 is for the 1H-exchange-chroma-process, i.e., the chroma signal input through pin ① of IC003 and the chroma signal which has been delayed by 1H by DL001 across pins ② , ⑤ and ④ are switched over by the frequency ½ divided PG signal input from pin ⑥ for color sequence correction. The 1H-exchange-chroma-processed signal is output from pin ⑧ , and enters the converter II circuit in IC006 at pin ㊶ after passing through the PAL/SECAM select switch IC005. From then on, the process is the same as the PAL system.

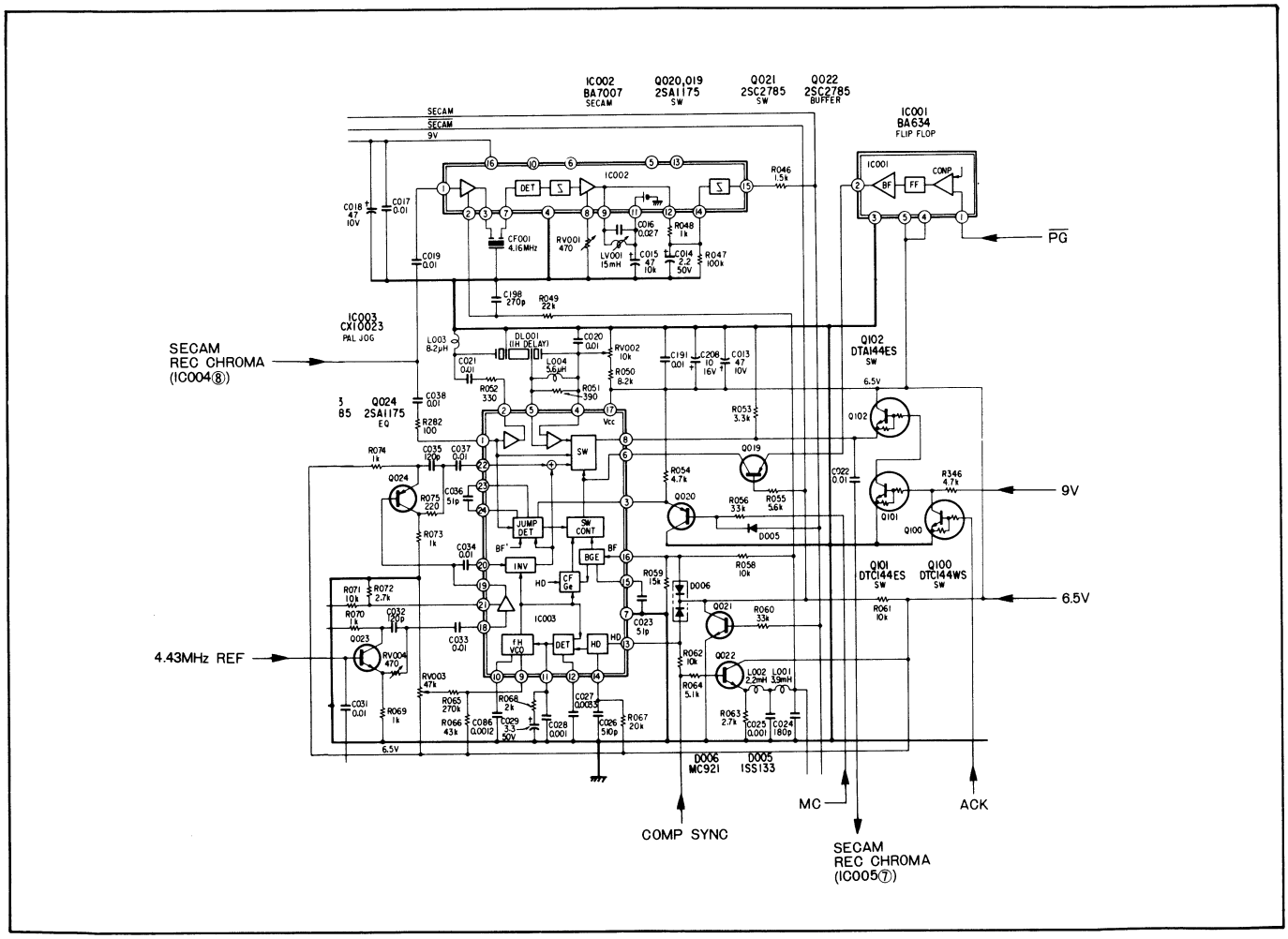

Fig. 1-7 1H Exchange and PAL/SECAM Det Circuit Diagram

5. Chroma PB System (PAL)

The C-RF signal is output from the RP-17 board, and input to IC006 through pin ⑦ after flowing through the BPF (L007, C073, C074). This signal is ACC-processed in the IC, and is output from pin ① after passing the PILOT BURST ADD circuit without receiving any effect. The signal passes through the PAL/SECAM select switch IC005 and reinput to IC006 through pin ㊶ . It is frequency-converted in the converter II circuit into a 4.43MHz chroma signal, and output from pin ㊴ . In IC006, also the APC circuit removes jitter from the chroma signal. The chroma signal output from pin ㊴ of IC006 is input to the comb filter consisting of Q502 through Q504 and DL501 (2H delay line), and the cross talk component from the adjacent track is eliminated in the filter. The chroma signal output from the comb filter is input to IC006 through pin ㊲ via the 4.43MHz BPF (BPF001). Then, it flows through the burst ID circuit and the ACK circuit, and is output from pin ㉟ . The burst ID circuit serves to reverse the chroma signal phase when the APC is unlocked to shorten the time before the locking of APC. The ACK circuit serves to output an ACK signal (approx. 3.5V DC) by superposing it on the chroma signal, during the color mode. These two circuits are not used with the SECAM signal.

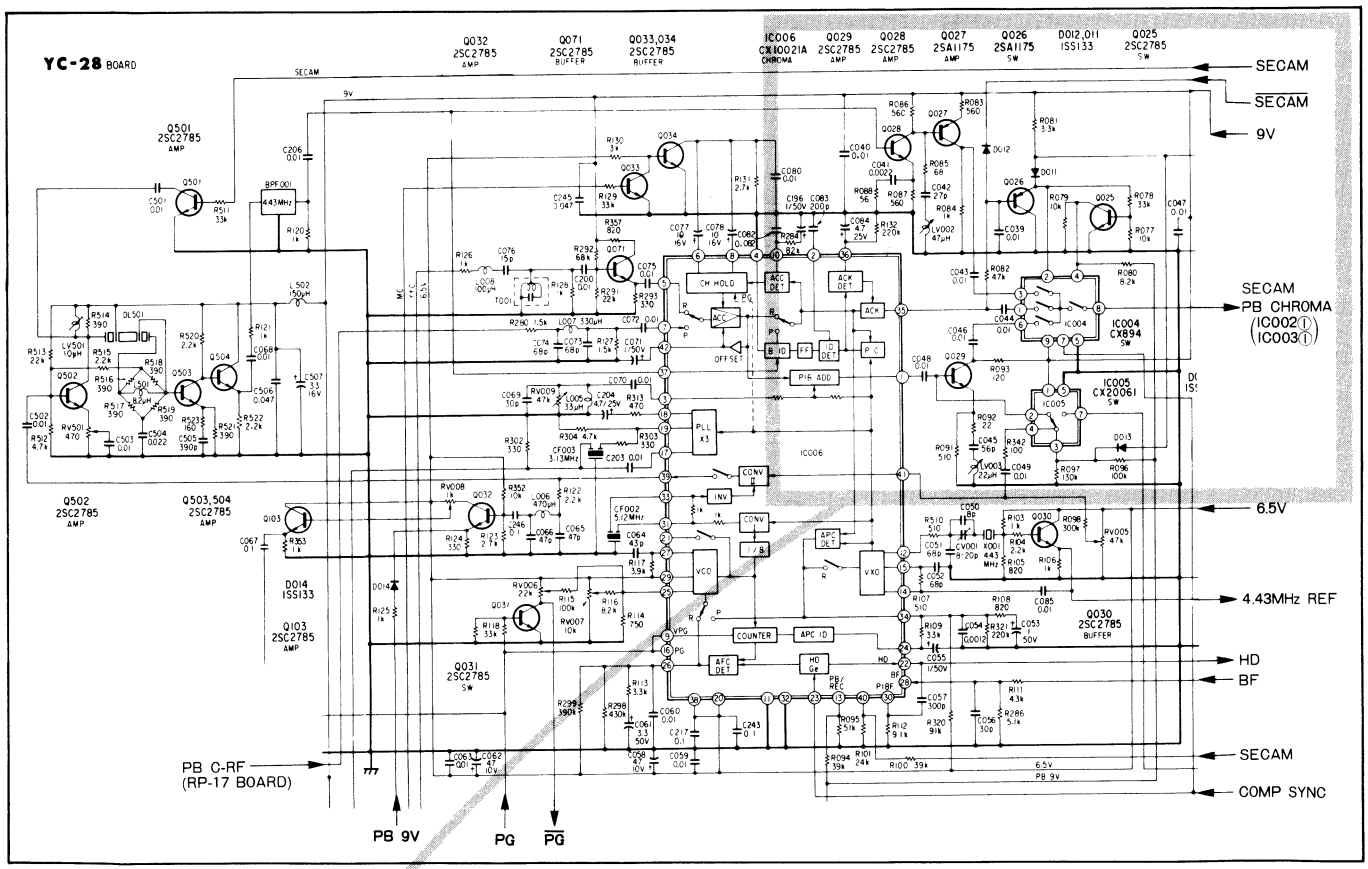

Fig. 1-8 PB CHROMA Process Circuit Diagram

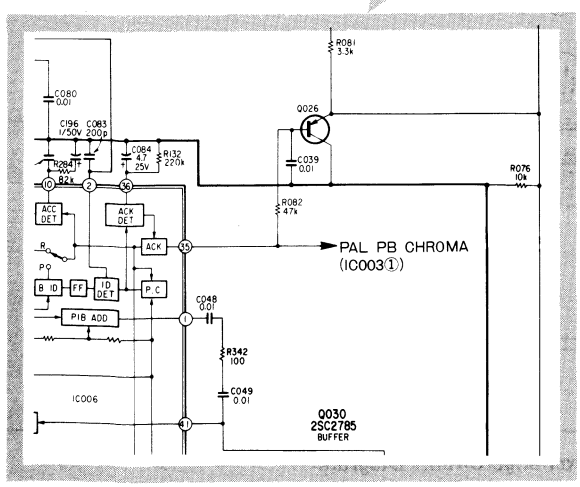

SL-HF100E
SL-HF100UB
SL-HF100SA
SL-HF100AS

The chroma signal output from pin (35) of IC006 is input to IC003 through pin (1) via the PAL/SECAM select switch. Since the R-Y signal phase is reversed at each 1H with the PAL chroma signal, the sequence of (R-Y) and −(R-Y) may be reversed during speed-change PB, resulting in color inverting. To prevent this, a special jog chroma process is required. During the normal PB, the PILOT BURST signal only is cleaned in IC003, but during the speed-change PB, the following three operations are performed.

1) A stable internal burst signal is formed with the 4.43 MHz REF signal (Q030 emitter output) and the HD signal (IC006 pin (22) output), and this signal is inserted to the PB chroma signal to replace the burst signal (PB burst signal).
2) The PB burst signal and the internal burst signal are compared for phase to detect any color reversal, and the undelayed chroma signal and the 1H delayed chroma signal are switched over to correct the color of the PB chroma signal.
3) The PILOT BURST signal is cleaned as with the normal playback process.

The chroma signal output from pin (8) of IC003 is input to IC009 through pin (32) for mixing with the Y signal.

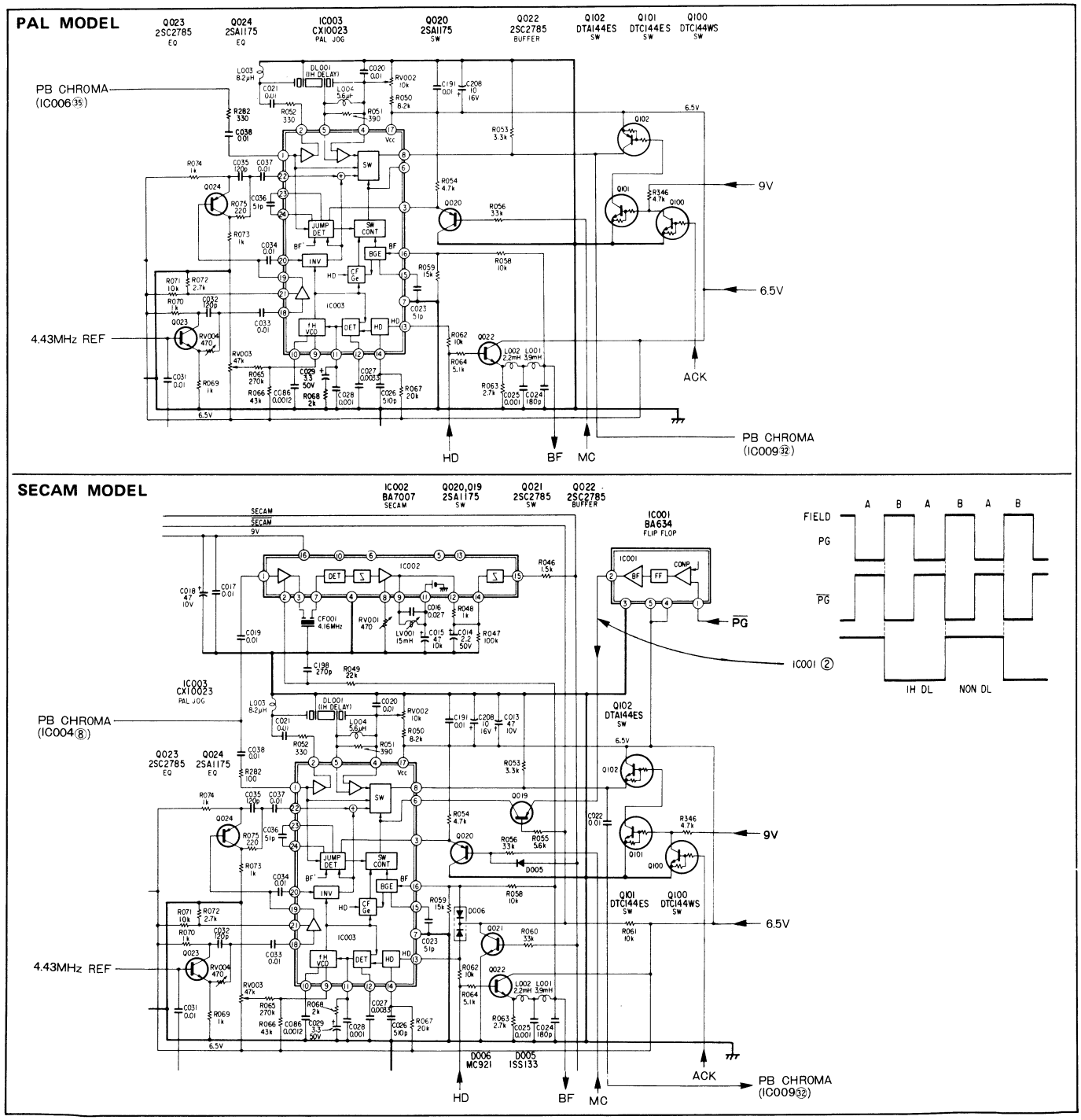

Fig. 1-9 Jog CHROMA Process and 1H Exchange Circuit Diagram

6. Chroma PB System (SECAM) . . . SL-HF100ES/EC Model

The process is the same with the PAL signal until the frequency conversion by the converter II in IC006. The frequency converted and jitter-freed chroma signal is output from IC006 through pin (39) , and input to the PAL comb filter (Q502 through Q504, DL501). In the SECAM mode, Q501 is on, and therefore, the comb filter is inoperative, allowing the chroma signal to pass unchanged, via the BPF (BPF001), to the counter-bell filter consisting of Q028 and Q027. Here the signal is brought back to the normal SECAM chroma signal in this filter. Then the signal is input to IC003 through pin (1) via the PAL/SECAM select switch IC004. In IC003, the signal is 1H-exchange-processed to recover the color sequence of the normal SECAM chroma signal, output from pin (8) , and input to IC009 through pin (32) for mixing with the Y signal.

7. AV Connector Output

When the AV CONT signal is turned to H, Q001 is turned on and also Q066 is turned on, as a result DC 12V to be applied to pin (1) of CN010. Bias current flows to the base of the video switch Q007, causing the video signal from Q072 to flow through Q007 to pin (2) of CN010. A bias voltage is applied to the gate of the audio switch Q003, Q005 to allow the L-ch audio signal to output from pin (4) via Q004 and Q005, and the R-ch audio signal to output from pin (6) via Q002 and Q003.

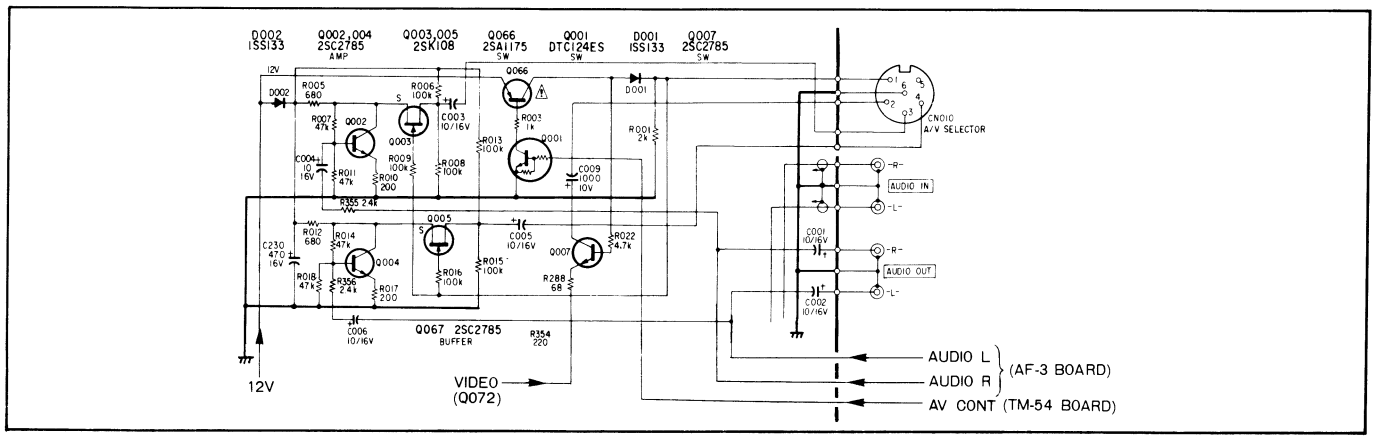

Fig. 1-10 A/V Connector Output Circuit Diagram

8. AFC, APC System (PAL)

REC System

The 4.43MHz chroma signal input through pin (5) and the 4.43MHz VXO output are applied to the APC DET for phase comparison between the chroma signal burst and the VXO output, and the error voltage is applied to the VXO via the low pass filter pin (34) . As a result, the VXO oscillation frequency is locked to the 4.43MHz chroma burst signal. This is the APC system.

From the COMP SYNC signal input at pin (23) , HD pulses are generated and applied to the AFC DET, to which also the frequency-divided V351 (field A) or V353 (field B) output of VCO is applied. These two signals are phase-shift-detected by AFC DET and the error voltage is applied to VCO via the low pass filter pin (26) to cause the VCO to oscillate at 351.f_H (field A) or 353.f_H (field B). This is the AFC system.

The VCO output is frequency-divided to 1/8 and applied to the converter I, and together with the VXO output, produces the carrier for the converter II.

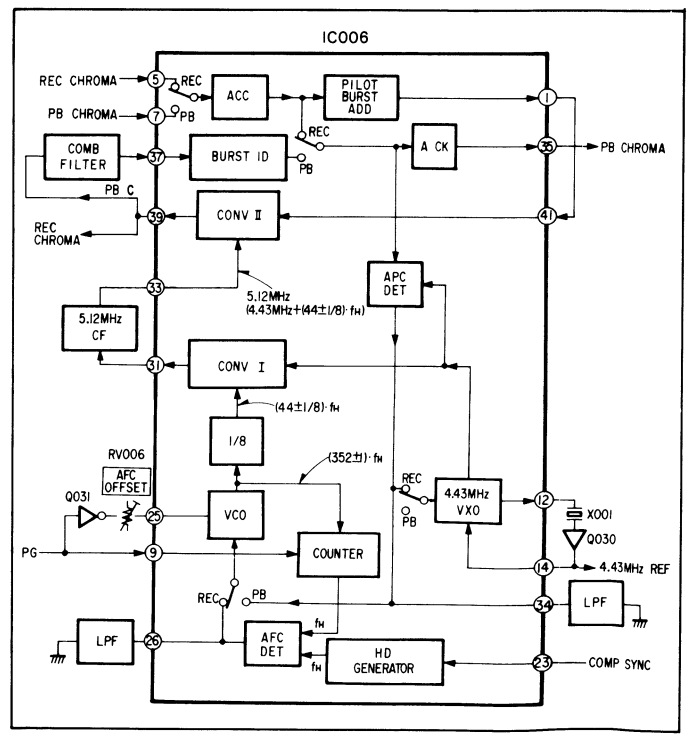

Fig. 1-11 AFC and APC System (PAL Mode) Diagram

PB System

The VXO serves as a 4.43MHz fixed oscillator. The PB chroma signal input at pin ⑦ is converted to a 4.43MHz chroma signal in the converter II, flows through the comb filter connected across pins ㊴ and ㊲ , and is input to the APC DET via the burst ID circuit. In the APC DET, the chroma signal is phase-shift-detected with the 4.43MHz reference signal during the pilot burst period, and the error voltage is input to the VCO via the LPF pin ㉞ . As a result, the VCO frequency is corrected so that the 4.43 MHz chroma signal frequency after the frequency conversion in converter II conforms to the 4.43MHz reference signal. In this way, jitter is eliminated.

9. AFC System (SECAM) . . . SL-HF100ES/EC Model

In the SECAM mode, the PAC system is not used, and the VXO is used as a fixed frequency oscillator, and the AFC system operation is similar to the PAL REC.

During the PB, the jitter component of COMP SYNC is brought into the 5.12MHz frequency conversion carrier unchanged. In the converter II, the jitter component in the low conversion chroma signal input from pin ㊶ and that in the 5.12MHz frequency converted carrier cancel each other, and the chroma signal output from pin ㊴ is free from jitter.

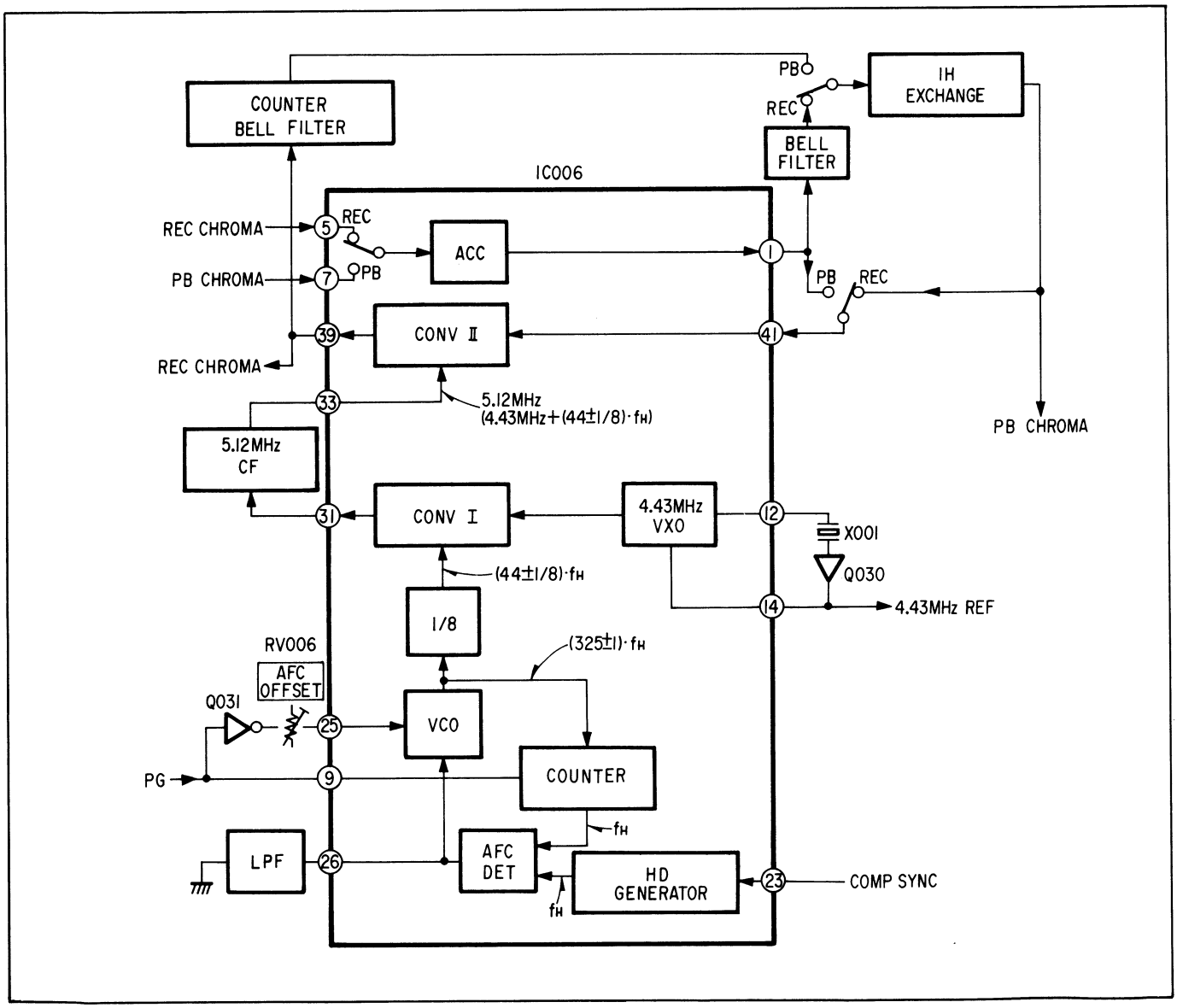

Fig. 1-12 AFC System (SECAM Mode) Diagram

1-2. RP-17 Board

1. Video Signal Recording System

The Y-FM signal input to the RP-17 board is input to the Q006 emitter after passing through the recording current setting RV (RV003), and the REC equalizer Q001, Q002. This equalizer circuit serves to compensate the frequency characteristics of the Y-FM signal. Also the chroma RF signal is input to the Q006 emitter. These two signals are mixed in Q006, and the output from the collector is input to IC001 at pin ㉒ (A ch) and pin ㉑ (B ch). The signals are separately amplified, output from pin ㉕ (A ch) and pin ④ (B ch), and applied to the A ch head and B ch head via the respective 2:4 rotary transformers. The recording current flowing through the heads is approximately 25mA.

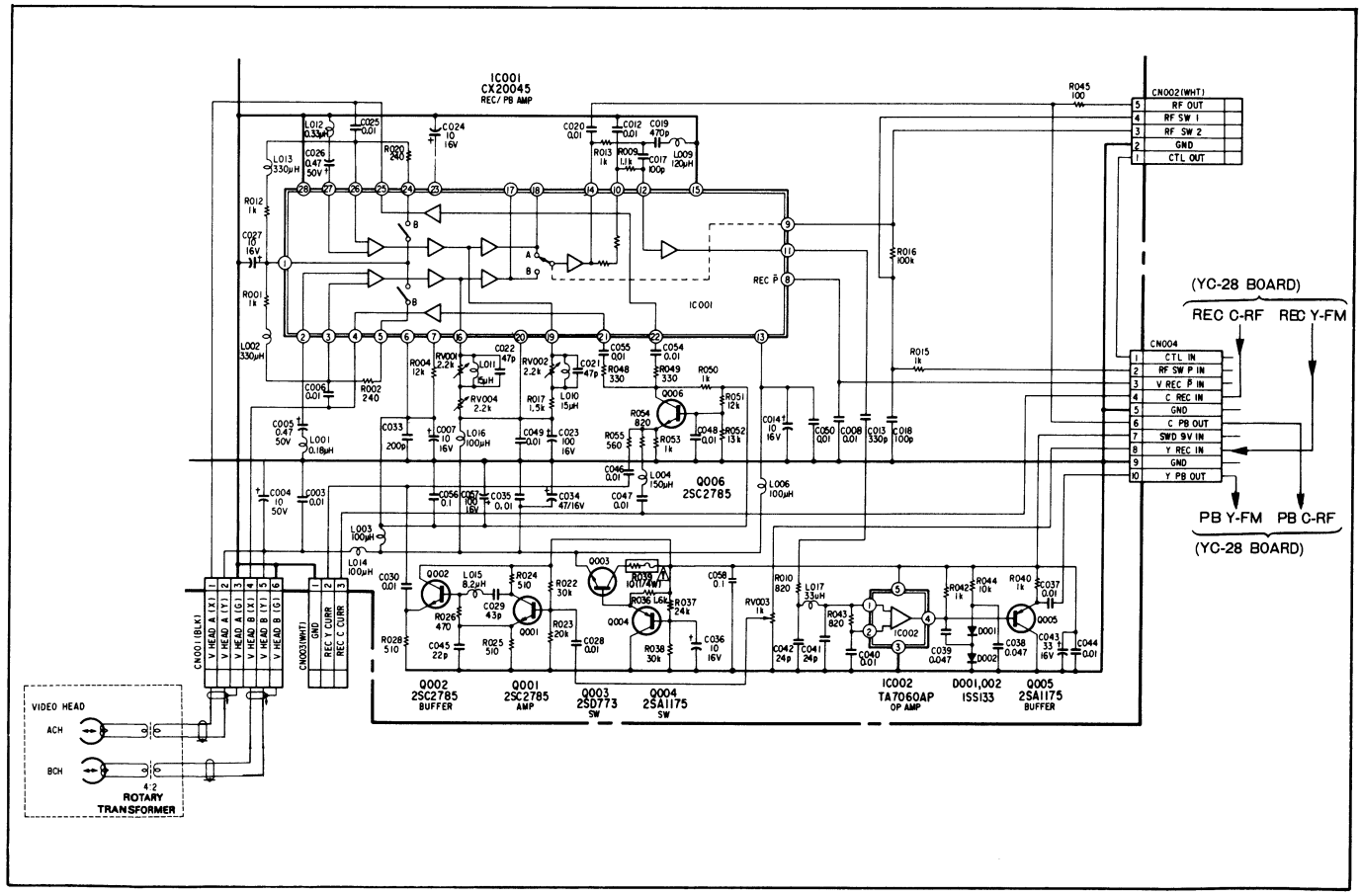

Fig. 1-13 Video Signal REC/PB Process Circuit Diagram

2. Video Signal PB System

The PB signals from the video heads are input to IC001 through pin ㉖ (A-ch) and pin ③ (B-ch), amplified, frequency-compensated by the equalizer circuits respectively, and are selectively sent to the amplifier by the A/B channel head select switch again amplified and output from pin ⑭ . The PB signal for the chroma system is output to the YC-28 board in this state. The PB signal for the Y system is input to IC001 at pin ⑫ via the chroma signal trap consisting of L009 and C019, and output from pin ⑪ after flowing through the buffer amp. The signal is further made to flow through the LPF consisting of L017, C042 and C041, the limiter consisting of IC002, D001 and D002, and the Q005 buffer and output to the YC-28 board.

These LPF and the limiter, together with the HPF (C158, R235, L026) on the YC-28 board, make up a soft limiter to prevent black over-modulation.

3. RF Modulator AGC Circuit

If the input audio signal is larger than the permissible limit of the FM modulator, the reproduced sound is distorted, and to prevent this, the audio signal is input to the RF modulator via the AGC circuit.

The audio signal is input to IC201 through pin ⑤ via the attenuation circuit composed of R201 and Q201, and is output from pin ⑦ after amplification. The output from pin ⑦ is input to the AGC amp IC702 through pin ③ , and is output from pin ① after further amplification. Then, it is rectified to the double voltage by D202 and D203, and charged in C207. When this charged voltage is low, that is, when the audio signal is low, the Q201 base is free from current, and the attenuation circuit is out of operation, but when the voltage exceeds a preset level due to the excessive large audio signal above the permissible input level of the RF modulator, current flows through the Q201 base to actuate the attenuation circuit. As a result, the output level at pin ⑦ of IC201 (RF modulator input level) is reduced below the permissible limit level. C206 is used to improve the rise characteristics of the AGC and TH203 to compensate for temperature fluctuation.

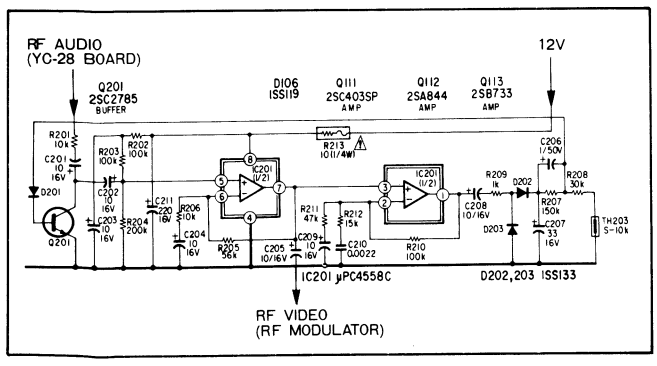

Fig. 1-14 AGC Circuit Diagram

2. SYSTEM CONTROL

The system control operation of SL-HF100 Series is basically the same with SL-C30 Series. The main difference is as follows.

2-1. Tape End Detection Circuit

To detect tape ends, the S sensor coil, the T sensor coil and IC602 are used. IC602 incorporates a oscillator circuit, an AGC circuit and a tape end detection circuit.

IC602 oscillates constantly, and applies the oscillation output to the sensor coils constantly. However, since its level is kept minimum by the AGC, the video and audio systems are free from interference even during operation in the playback mode. The oscillation level of IC602 is approximately 50mVp-p at pin ⑨ , and the frequency is approximately 200kHz.

The operation during the forward run (S side sensor operation) is as follows.

During forward run, pin ③ (TOP/$\overline{\text{END}}$) of IC601 is L, pin ③ of IC602 is also L, and the switch in IC602 is set to the pin ② side (S side). With the output from pin ⑨ of IC602 fed back to pin ② via C605 and R605, IC602 is set to oscillation. The output from pin ⑨ is also input to the AGC amp through pin ⑦ .

During tape run, the oscillation level is high because of the high Q of the S sensor coil, and the level is reduced by the AGC. As a result, a DC voltage of approximately 1.1V is output from pin ⑥ of IC602 as the AGC detection output.

At the tape end, as the aluminum foil on the tape approaches the S sensor coil, its Q becomes low to stop the oscillator, and the AGC detection output is turned off (0V dc).

The tape end detection circuit detects the tape end state by the AGC detection output level, and changes the output level of pin ④ from H (run) to L (tape end).

2-2. Audio Muting Signal

The AUDIO MUTE 2 signal from pin ⑦ of IC601 and the AUDIO MUTE 3 signal from the timer circuit are added by D602, and output to the BETA HI-FI audio circuit. The AUDIO MUTE 2 signal is also output to the NORMAL audio circuit. The AUDIO MUTE 2 signal serve to mute the audio signal during the speed-change PB mode. The AUDIO MUTE 3 signal serves to mute the audio signal during the switching on and off of the power supply.

3. SERVO CIRCUIT

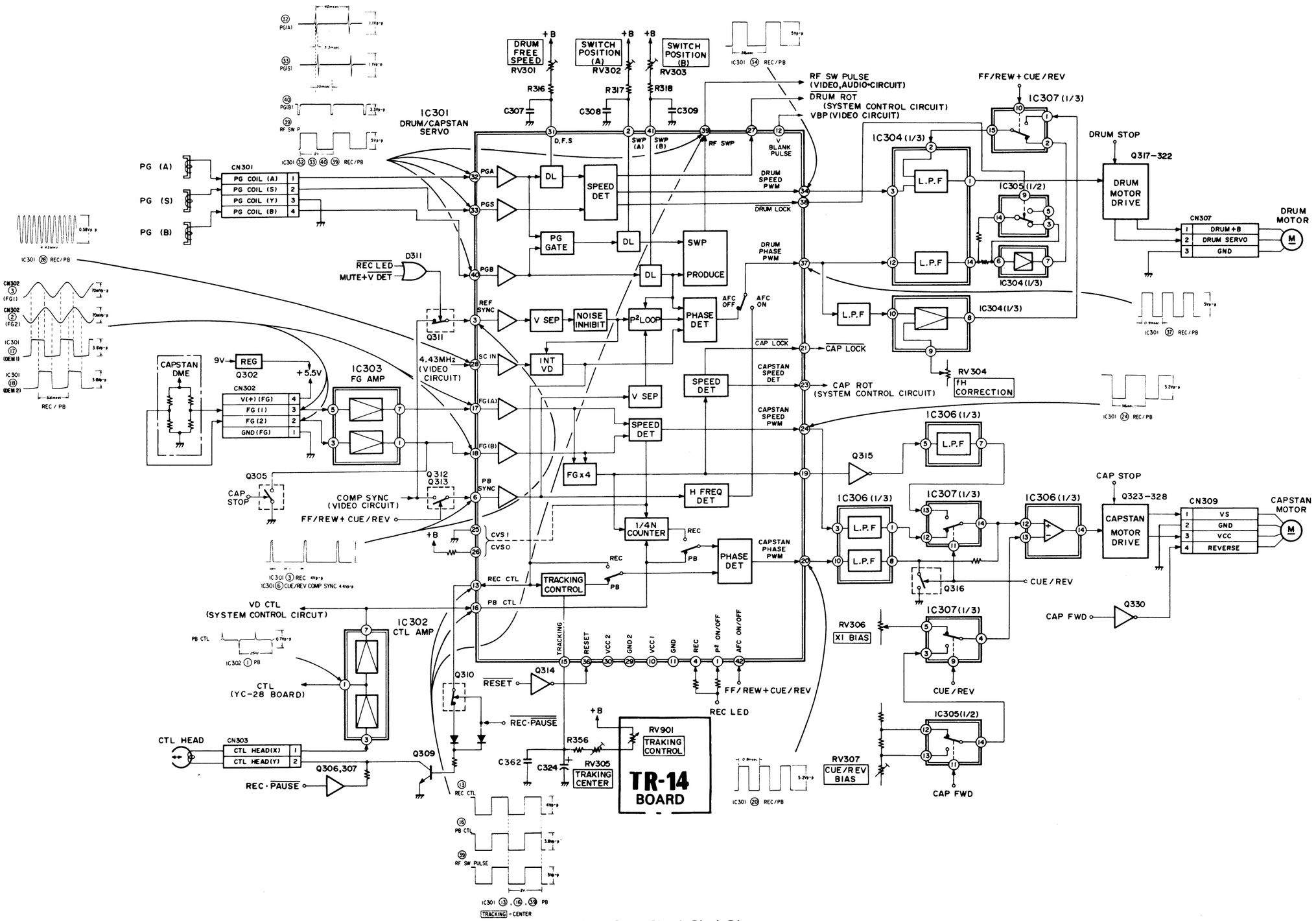

Fig. 3-1 Servo Circuit Block Diagram

Servo Circuit

Basically, the operations of the capstan servo and drum servo are the same as those of SL-C30 series.

3-1. Reel Motor Control Circuit

The circuit has the same functions as those of the SL-C30 series. Therefore, the unthreading operation only will be described.

Unthreading Operation

Pressing the EJECT button, the levels of pin ④ (C. INS) and of pin ⑱ (REEL LOW) of IC601 become "H", while the levels of pin ⑩ (REEL STP) and pin ⑲ (REEL FWD) of IC601 become "L". At the same time, the levels of pin ⑥ (UNLOAD) and of pin ⑪ (FF/REW) of IC601 become "H" for 200msec. By this, Q004, Q008, Q009, and Q024 turn on and Q023 turns off.

Thus, the reel motor drive circuit input (base of Q015) is input with a voltage divided by a combined resistance dividing 12V with R019, TH001, R016, R012, and D002 and with a voltage divided by a combined resistance dividing 12V with R013, R020, and RV001. As Q024 is turned on, the reel motor drive current control circuit comprising Q020, IC001, and Q025 does not operate, and the reel motor is constant-voltage driven by this voltage. As Q034 is turned off, the reel motor rotates in an opposite direction. When the levels of pins ⑥ (UNLOAD) and ⑪ (FF/REW) of IC601 become "L" after a lapse of 200msec, Q004, Q008, and Q009 turn off, while Q023 turns on. Q024 turns off some time later due to charges charged in C006. For this reason, while Q024 is turned on, the reel motor is constant-voltage driven by a voltage obtained by dividing 12V by a combined resistance of R019, TH001, and R016 and by R041. When Q024 is turned off, the reel motor drive current control circuit comprising Q020, IC001, and Q025 operates to constant current drive the reel motor.

The reel motor is constant voltage driven only immediately after starting unthreading operation after which the motor is constant current driven.

3-2. LOADING/THREADING Motor Drive Circuit

The circuit operates the same as in the SL-C30 series. Depending on the timing when the power is turned on, Q028, Q029, Q030, and Q031 are sometimes turned on entirely, and C008, R084, C009, and R085 are provided to prevent this.

When the power is turned on, a charge current of C008 flows between R084 and the base and emitter of Q026, and Q026 is turned on. Therefore, Q027 and Q029 are turned off. This holds true with C009, and Q033 turns on while Q032 and Q031 turn off.

R086 shunts the current flowing the motor to prevent the motor from being heated when the loading/threading motor stops by some trouble.

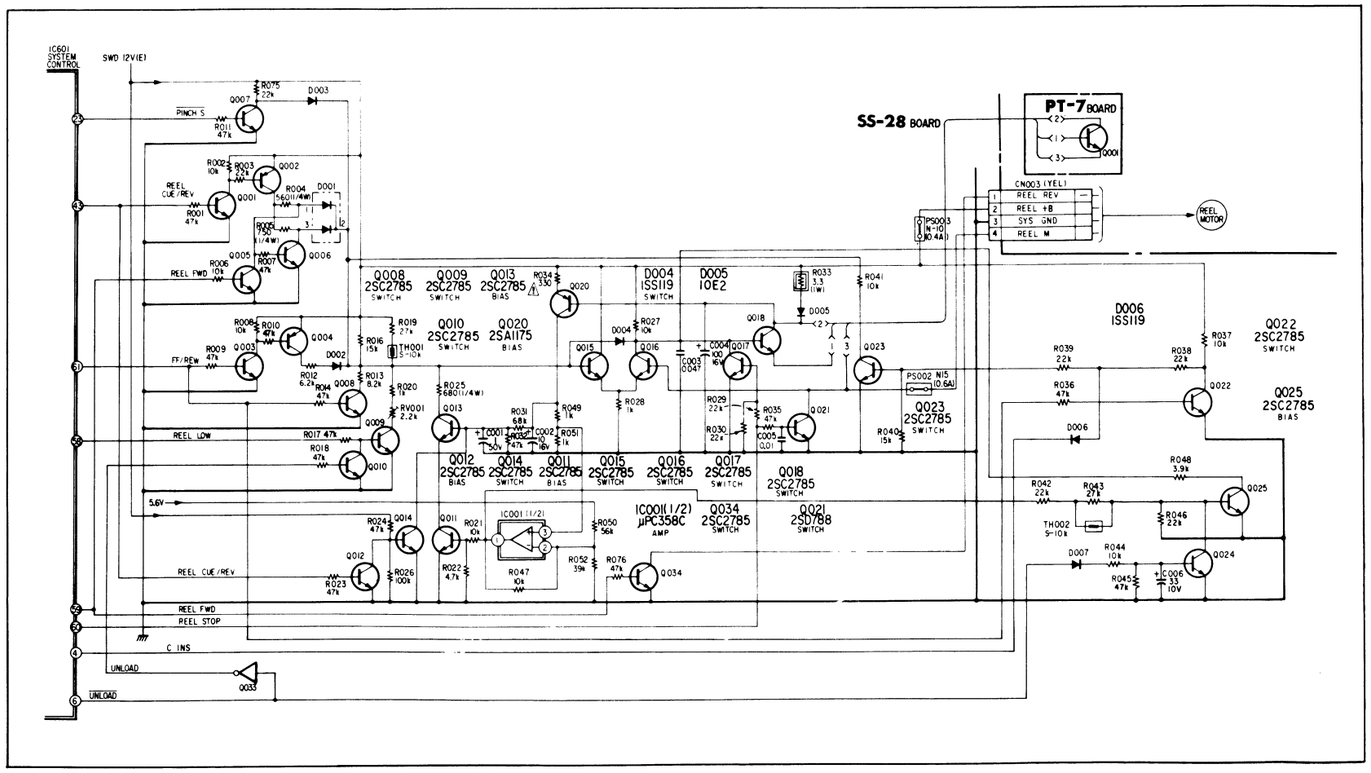

Fig. 3-2 Reel Motor Control Circuit Diagram

4. AUDIO CIRCUIT

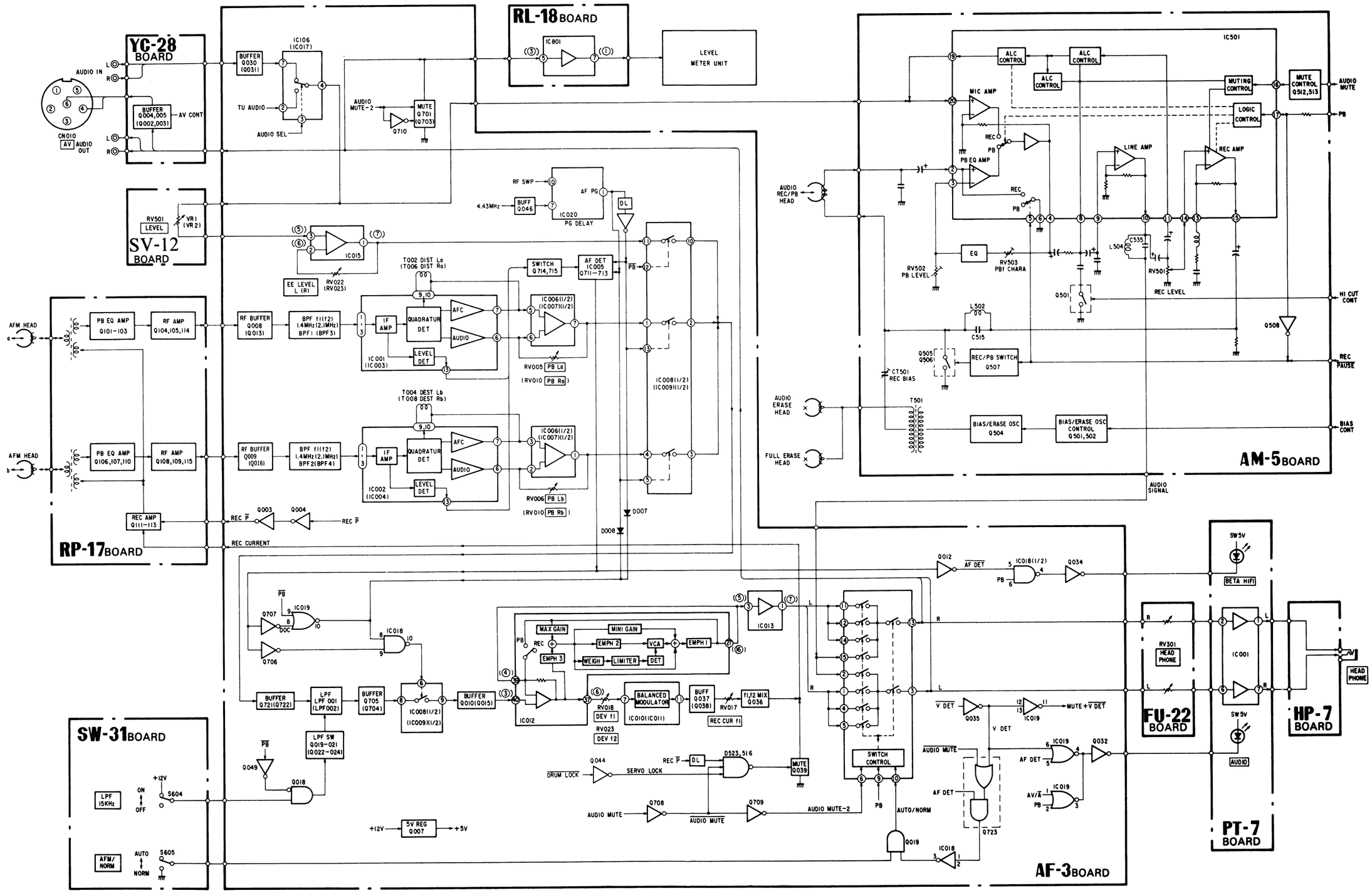

Fig. 4-1 Audio Circuit Block Diagram

4-1. β HiFi Audio Circuit

4-1-1. β HiFi PAL System

1. Deep Layer Recording System

Generally there is an optimum relation between the wavelength λ of signal recorded on the magnetic tape and the depth "d" from the tape surface and is expressed as the following function.

$$d = \frac{\lambda}{4}$$

With video signals (Y-FM signal), d is around 0.8μm, and portions below this depth of magnetic tape are not utilized. In the β HiFi PAL deep layer recording mode, a carrier with far lower frequencies than the Y-FM is used to carry audio signals to record them at deeper portions of the tape. Low-converted chroma signals are too low in the recording current to reach large depths.

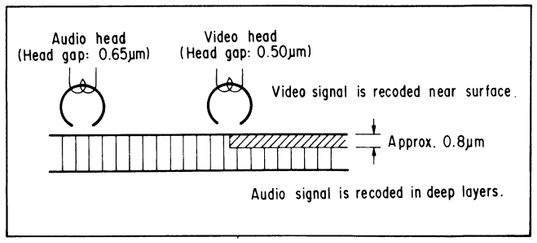

Fig. 4-2

2. Carrier Frequency

With β HiFi PAL, two carriers are used; f1 for L-ch, and f2 for R-ch, and they are frequency-modulated by the respective audio signals. For f1, 1.44MHz is used and for f2, 2.10MHz is used. To avoid interference with the low-converted chroma signal with a frequency of approximately 688kHz and a band width of approximately ±500kHz, this f1 frequency of 1.44MHz has been selected well away from it. The frequency of f2 has been selected to allow ample frequency band width for modulation, to avoid interference with the low-converted chroma signal by the cross-modulated component of f1 and f2, and to avoid too high f2 that may cause high attenuation of the video signal without satisfactory deep layer recording.
During recording, the recording current for f2 is set larger than that for f1 to make f2 serve as the recording bias current for f1. The current ratio between f2 and f1 is set at approximately 4:1 so that f1 and f2 will have the same overall C/N (signal-noise power ratio) values with the recorind and the playing back processes combined in the normal picure recording mode.

3. Modulation Factor

The modulation factor of A-FM signal is specified as follows.

Maximum frequency deviation: ±200kHz

4. β HiFi PAL Audio Head

The video head and the audio head are 45° shifted each other as shown in Fig. 4-3. The video head has a ±7° azimuth, while the audio head has a ±30° azimuth.

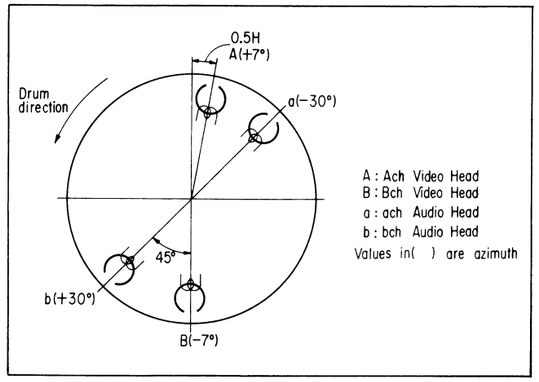

Fig. 4-3

In Fig. 4-3, A-ch may appear to have the video head leading and the audio head trailing, but actually, because the video and audio heads are on different lines, as shown in Fig. 4-4, the recording pattern on the tape is as shown in Fig. 4-5.

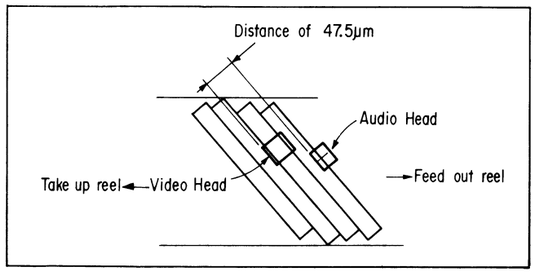

Fig. 4-4

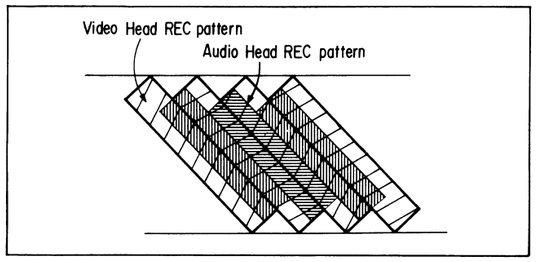

Fig. 4-5

In Fig. 4-5, the video pattern is disaligned from the audio pattern. The reason for this is that if they are aligned, the video head with a wide 43μm width may cover three audio tracks to give large interference to the reproduced picture by the audio signals, and to avoid this, the position shown (the video head straddling two audio tracks) for least possibility of covering three audio tracks, has been selected.

5. Rotary Transformer

Because the β HiFi audio heads are additionally incorporated in the rotary drum, a rotary transformer is installed above the drum. The rotary transformer is for two AFM signal channels, the turn ratio is 1:1, and the gap between the rotary and the fixed portions is 100μm.

6. AF PG Signal

For playing back, the audio head a and b channels must be switched over according to the drum angular position, but for this switching, the RF switching pulse signal for the video head can not be used because the video head and the audio head are displaced by 45°. The audio head switching RF switch pulse is delayed to obtain the required AF PG signal. Although the delay is approximately 5msec, in view of the same overlap duration for the A-FM signal, as shown in Fig. 4-6, as the video head, the delay accuracy must be approximately ±10μsec for reasonable interchangeability allowance. Since this accuracy is difficult to achieve with a monomulti vibrator based on the CR time constant, etc., when temperature characteristics, etc. are taken into consideration, a microcomputer is used to digitally delay the pulse. For this delay, the 4.43MHz quartz oscillator output for the video chroma signal processing is utilized. This system satisfies the above delay time accuracy without adjustment, with the influence of the temperature characteristics included.

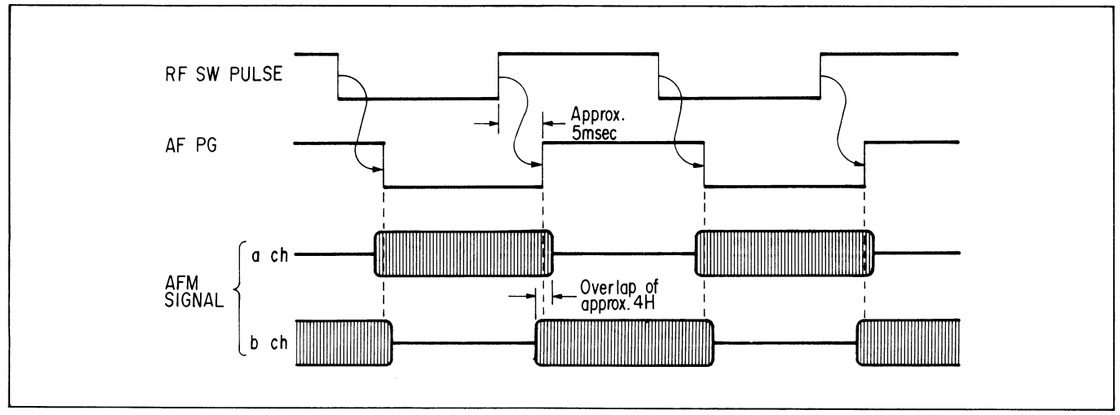

Fig. 4-6

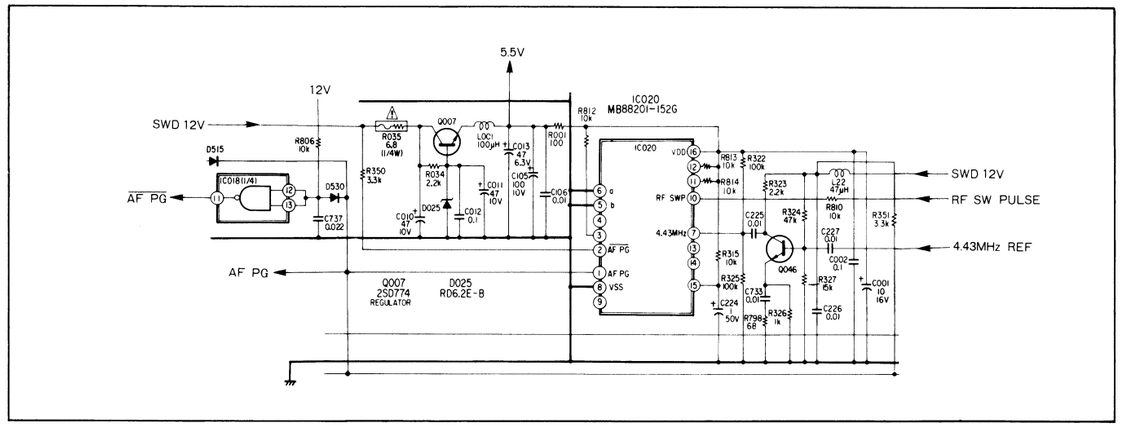

Fig. 4-7 AF PG Signal Generation Circuit Diagram

7. Dynamic Emphasis Circuit

The dynamic emphasis circuit is configured as shown in Fig. 4-8.

This circuit compresses and expands signals over the full frequency band of audio signals, and preemphasizes and deemphasizes the low and high AF ranges. To obtain flat frequency characteristic over the full band even in the standard level (reference input: −10dBs) recording and playing back, the high AF area emphasis is set at a reasonably low level.

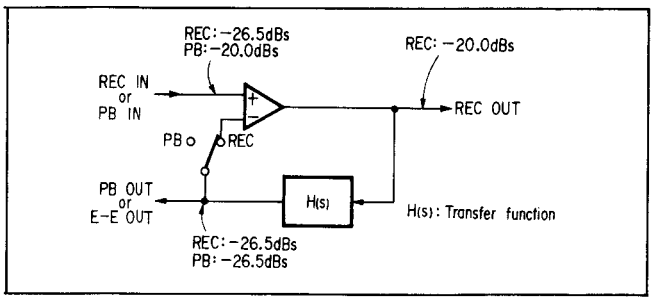

Fig. 4-8

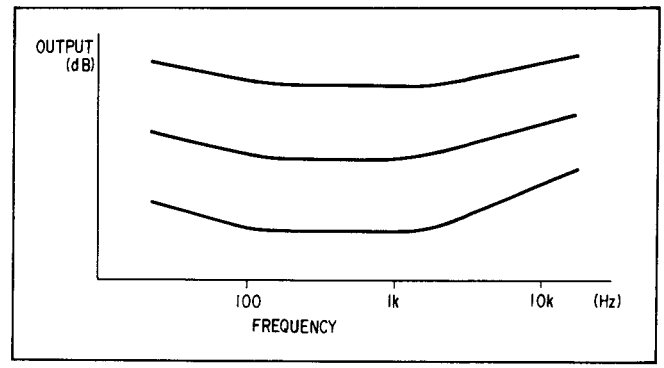

Fig. 4-9 Dinamic Emphasis Characteristic (REC Mode)

8. Recording Only Audio Signal

SL-HF100ES has a special mode for recording only the audio signals (β HiFi and normal), without recording the video signals. In this mode, since the A-FM signal is not attenuated by the video signal, the PB output level of the A-FM signal is higher than usual by 10 − 15dB, drop-out is lower, and set interchangeability is better.

[Recording]

When S903 on the SW-31 board is set to SOUND, the V REC $\overline{\text{PAUSE}}$ signal of the collector of system control block Q601 is forced to L. The video signal recording amp on the RP-17 board remains out of operation, and no recording current flows through the video head.

Because pin ① of IC019 is L, its pin ③ becomes H (as PB signal is L, IC019 pin ② is also L), Q032 is turned on, and the audio mode display LED (D309) is turned on.

[Playing Back]

When a tape recorded in the audio only mode is played back, no COMP SYNC signal is input to pin ⑯ of IC101 in the tuner block. Therefore pin ㉛ (MUTE+$\overline{\text{V DET}}$) remains H, Q035 collector L, and pin ⑪ of IC019 H. The output of pin ⑪ of IC019 is output to the video block to mute the video output signal.

When pin ⑥ of IC019 is kept L by Q035, playing back the A-FM signal causes the $\overline{\text{AF DET}}$ signal of pin ⑤ of IC019 to turn L, turning pin ③ of IC019 H, and turning Q032 on to light the AUDIO mode display LED (D309).

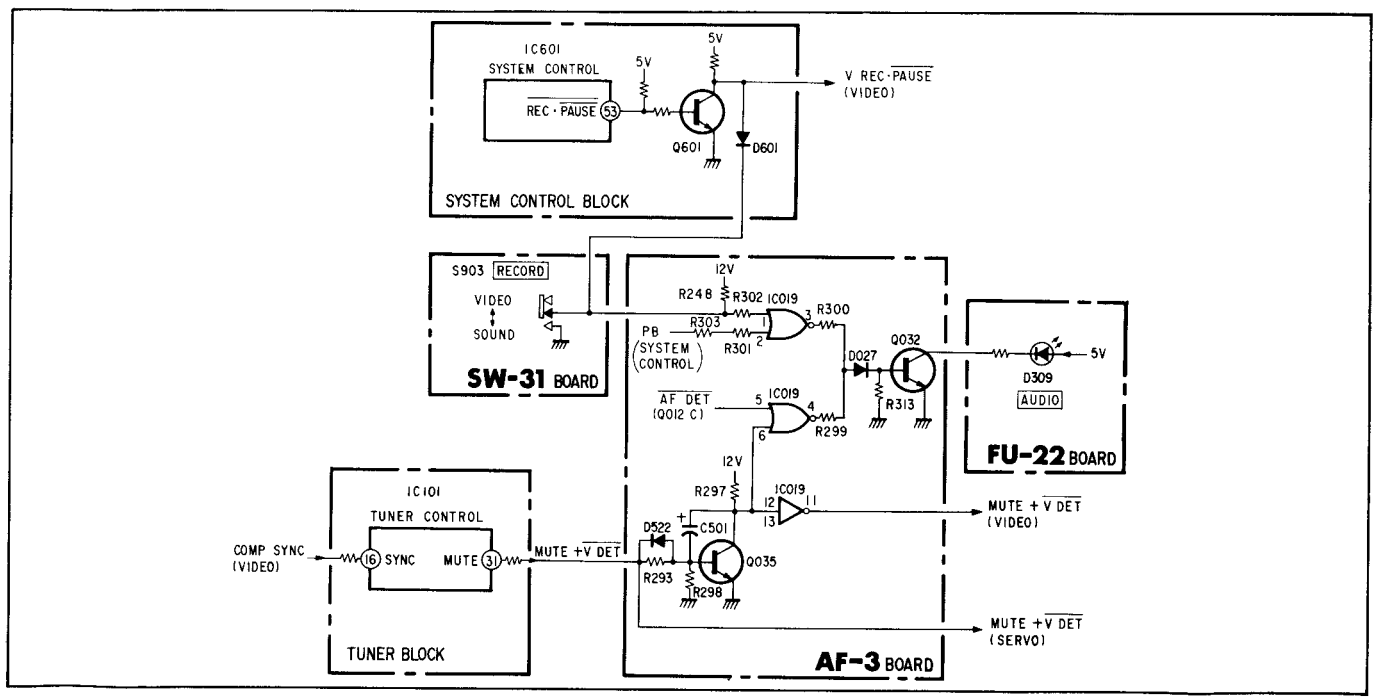

Fig. 4-10

4-1-2. Flow of Signal

1. Signal Flow During Recording

The signal flow in the L channel is as follows. The audio signal input to the LINE IN terminal is input to the AF-3 board through pin ⑧ . The signal is input via the buffer Q30 to pin ⑦ of the I/O selector IC016, and output from pin ④ . Here, the signal is switched over with the tuner audio signal input to pin ② by the audio select signal input to pin ③ . The signal output from pin ④ of IC016 is output to the outside of the board from pin ① of CN004, and reinput to pin ⑤ after flowing through the recording level adjusting VR. Then, the signal is input to the level adjusting amp IC015 through pin ③ , and output from pin ① . Here, if the recording level adjusting VR is at the click center when a reference level (−10dBs) signal is present at the LINE input terminal, the level of pin ㊵ of the subsequent stage dynamic emphasis circuit input IC012 is set at −26.5dBs by RV022.

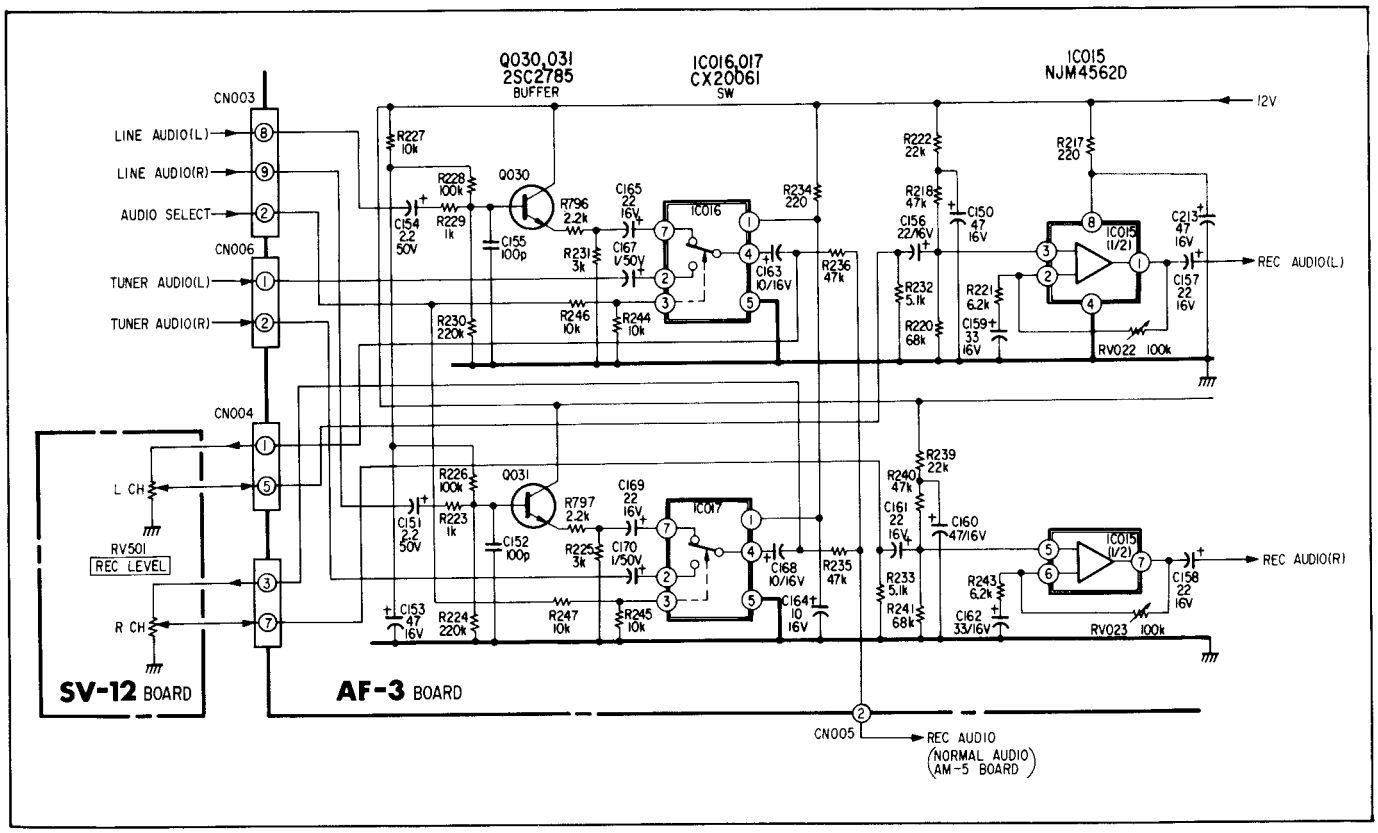

Fig. 4-11 Input Select and REC Level Adjustable Circuit Diagram

The signal is then input to switch IC008 through pin ⑪ , and output from pin ⑩ . Pin ⑪ and pin ⑩ are disconnected during the PB process. The signal then enters LPF001, which can be switched over between 15kHz and 20kHz. This is to eliminate the residual noise from the received TV or FM broadcasting (residual MPX carrier, etc.) that may cause malfunction of the dynamic emphasis circuit. The signal output from LPF001 flows through the buffer Q705, pins ⑧ and ⑨ of IC008, Q010, and input to the dynamic emphasis circuit IC012 through pin ㊵ . Pins ⑧ and ⑨ of IC008 and Q010 are used to compensate for the dropout during playing back, but have no function during recording.

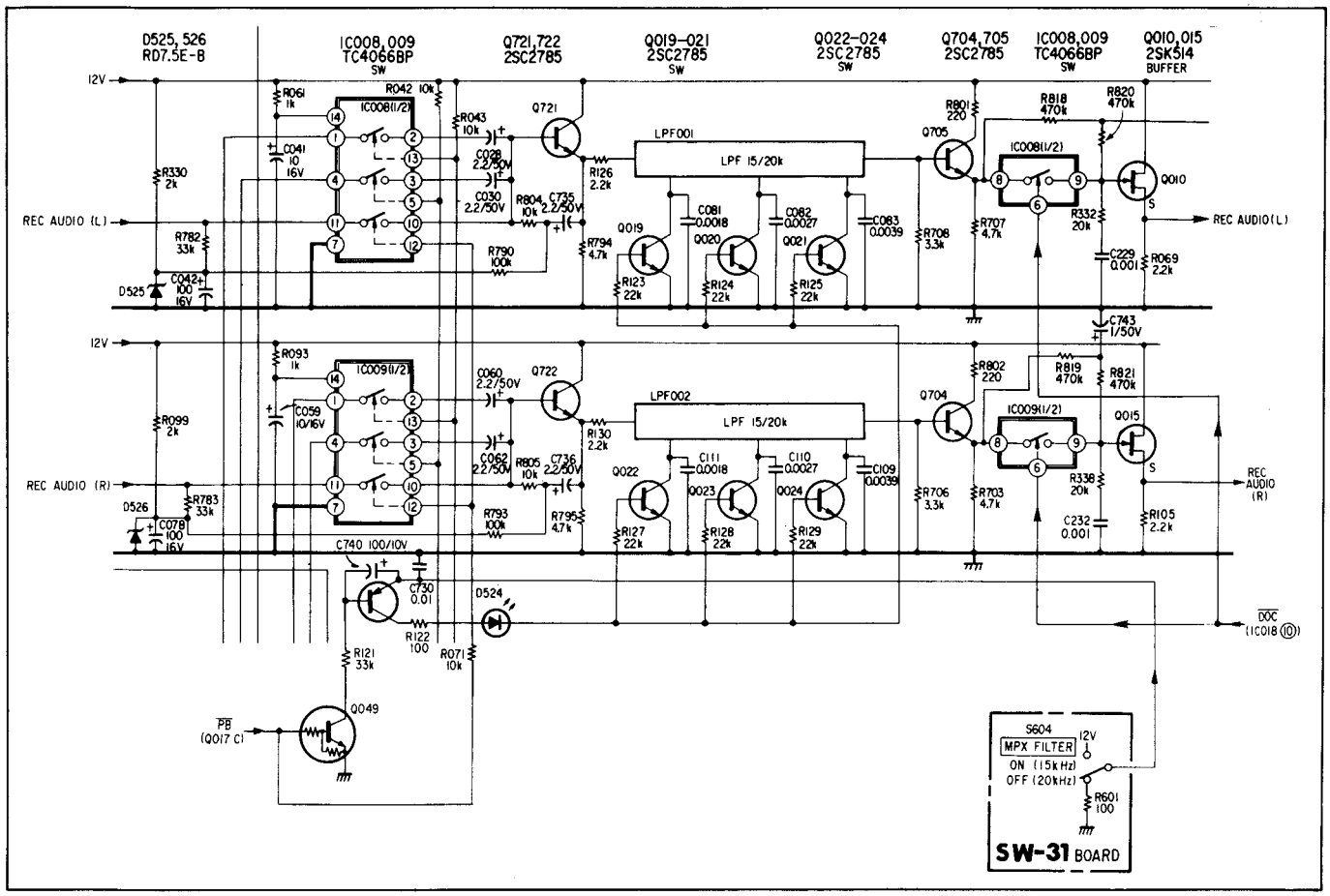

Fig. 4-12 REC/PB Select and LPF Circuit Diagram

The signal input to the dynamic emphasis circuit IC012 through pin ㊵ is encoded and output from pin ㊲ . From this IC also, the signal before encoding is output from pin ㉗ for E-E audio output.

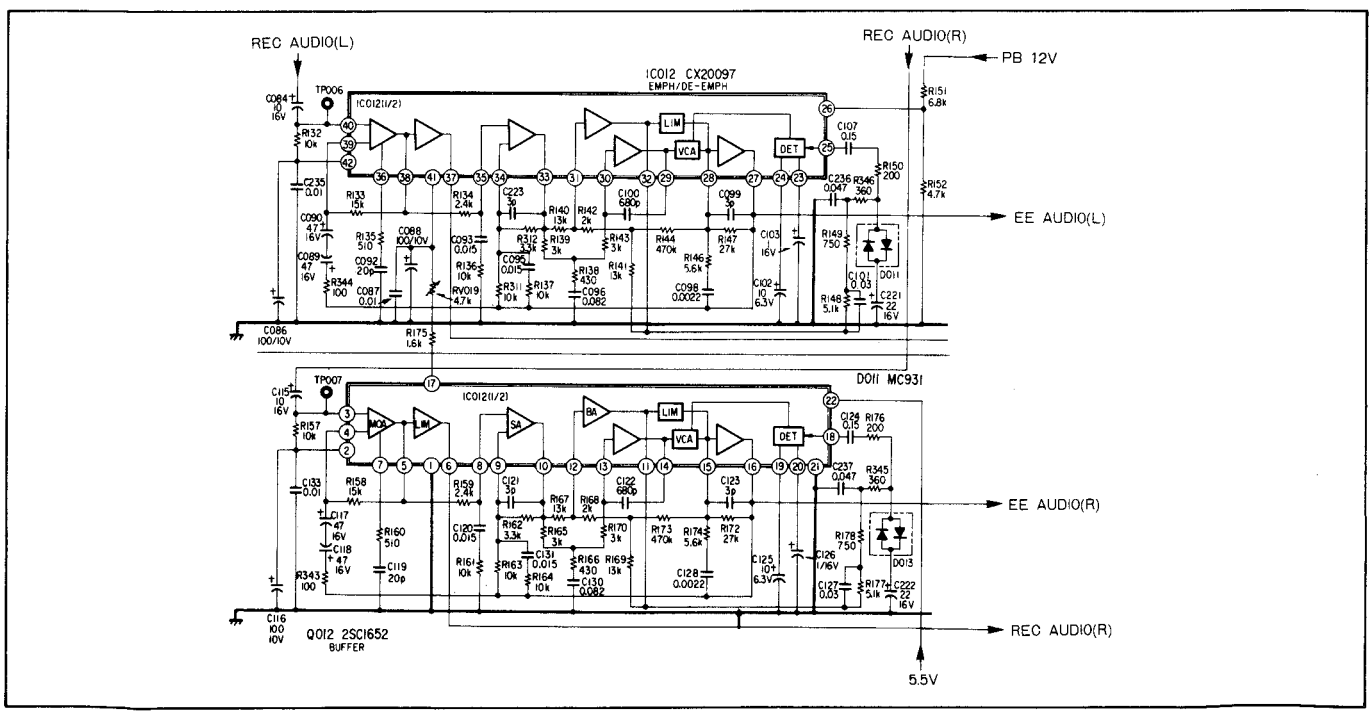

Fig. 4-13 Dinamic Emphasis Circuit Diagram

The signal output from pin (37) of IC012 is input to the OP amp in IC010 through pin (7) via frequency deviation setting RV018, and output from pin (9) . Then, the signal is input to the VCO through pin (13) , and is output from pin (11) in the form of square wave A-FM signal (1.44MHz). The RV016 connected to pin (13) is for setting the carrier frequency. The square wave A-FM signal is then reformed to a sinusoidal wave A-FM signal as it flows through the LPF consisting of L007, L008, C178, C179, and C180, and then, sent to RV017 for recording current level setting via Q037. The L ch A-FM signal (1.44MHz) output from RV017 is mixed with the R ch A-FM signal (f2: 2.10MHz) from Q038 and RV015, and is output via Q036 to the RP-17 board.

The Q724 and Q725 connected to the Q036 base are for muting the REC A-FM signal. When at least one of the three signals, SERVO LOCK, $\overline{\text{AUDIO MUTE}}$, and REC $\overline{\text{PAUSE}}$, becomes L, Q725 and Q724 are turned on to mute the REC A-FM signal. C738 and R815 compose the delay circuit for delaying the clearing of muting.

The flow of E-E audio signal is the same as the PB audio signal after the dynamic emphasis circuit (IC012 pin (27)), and the relevant description should be referred to.

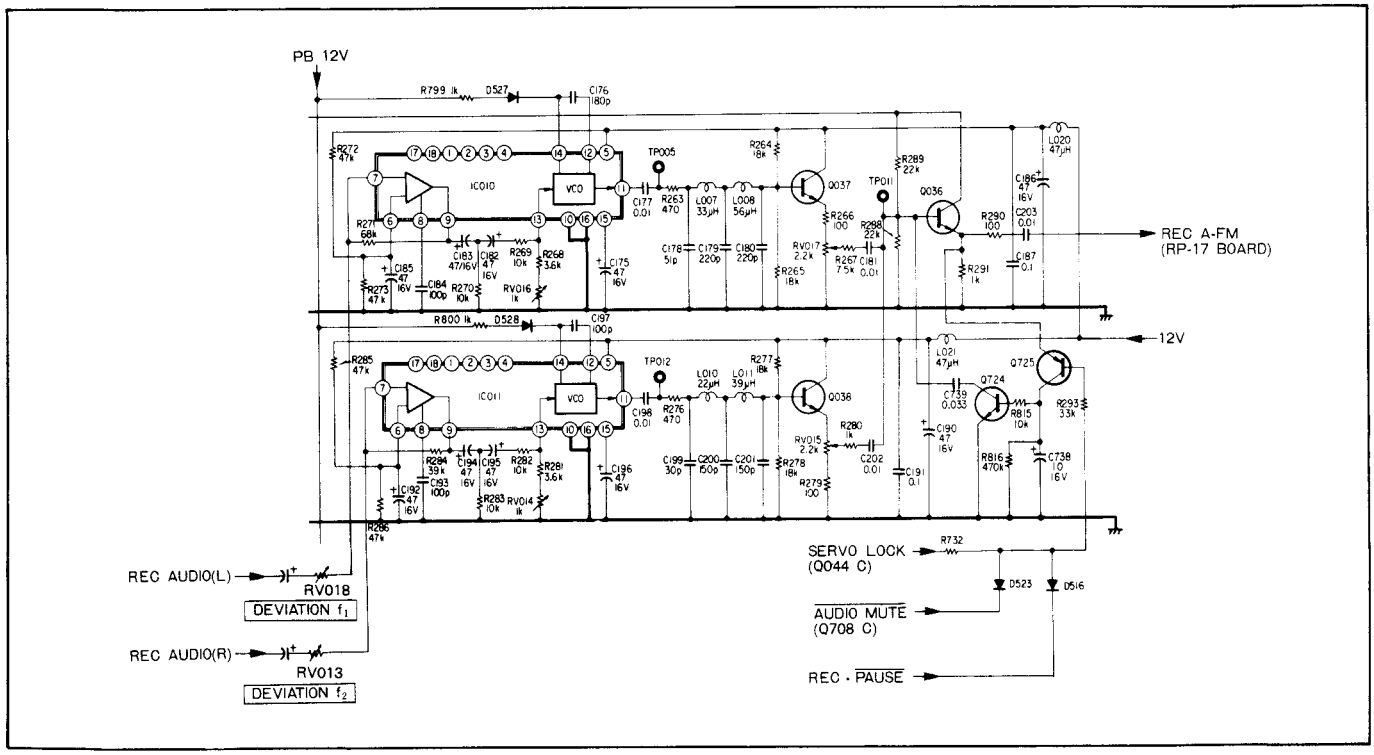

Fig. 4-14 FM Modulation Circuit Diagram

The A-FM signal input to the RP-17 board is input to T101 and T102 via the recording amp consisting of Q111, Q112 and Q113. This recording amp serves to drive T101 and T102 at a constant current by feeding back the current to the Q111 emitter by R135. D106 is for compensating the temperature effect of the Q111 bias voltage.

The A-FM signal flows through T101 and T102 with a voltage ratio of 5.5:5, and then, divided into the a and b channels, each input separately to the respective audio heads via the respective 1:1 rotary transformers. During recording, since Q101, Q103, Q106 and Q110 are off, the PB amp sides of T101 and T102 are open, and no recording current flows through the PB amp side windings.

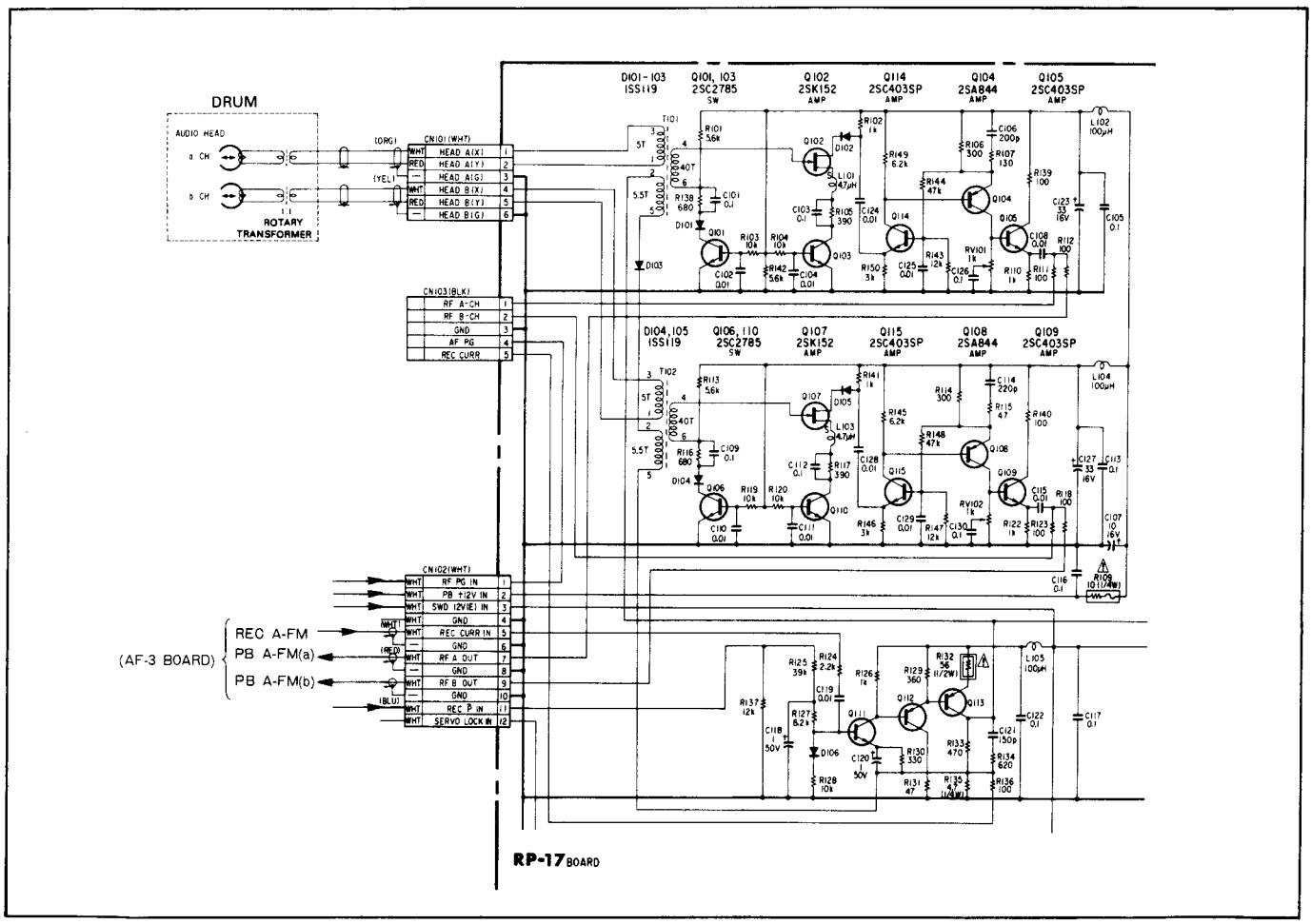

Fig. 4-15 AFM Signal REC/PB Process Circuit Diagram

2. Signal Flow During Playing Back (See Fig. 4-15.)

The A-FM signals reproduced by the a-ch and b-ch audio heads flow through their respective 1:1 rotary transformers, stepped up by the 5:38 transformers T101 and T102, and enter Q102 and Q107. At this time, since D103 connected to the recording amp side of T101 and T102 are free from bias voltage, they are off and the recording amp side of T101 and T102 are open. The a-ch and b-ch A-FM signals amplified by Q102 and Q107 are further amplified respectively by the a-ch amp consisting of Q114, Q104 and Q105 and the b-ch amp consisting of Q115, Q108 and Q109, and output to the AF-3 board.

RV101 is for setting the a-ch PB output level, and RV102 is for setting the b-ch PB output level.

Below, the flow of L-ch A-FM signal (f1) reproduced by the a-ch head will be described.

The A-FM signal reproduced by the A-ch head is input to Q008 and Q013, which is the circuit for the R-ch A-FM signal (f2). The A-FM signal (f1) input to Q008 is amplified by Q008, separated from f2 (2.10MHz) through the 1.44-MHz BPF, and input to the quadrature detector IC001 at pin ① . In this IC, the signal put through the 90° phase shifting circuit consisting of T002, L003, and C710 connected to pins ⑧ , ⑨ and ⑩ and the original phase-shift-free signal are multiplied together to demodulate. The frequency-demodulated output is output from IC001 from pin ⑥ , and input to IC006 through pin ⑥ after passing through a simple low pass filter consisting of C025, C026, R038 and R039. This signal is multiplied in IC006, and output from pin ⑦ . At this time, the A-FM signal modulated to the standard ±66.7kHz deviation is input to the FM demudulator through RV005, and the RV005 is so adjusted that the input at pin ㊵ of the dynamic emphasis circuit IC012 becomes −20dBs. This RV005 also serves to compensate the sensitivity difference between the a and b channels.

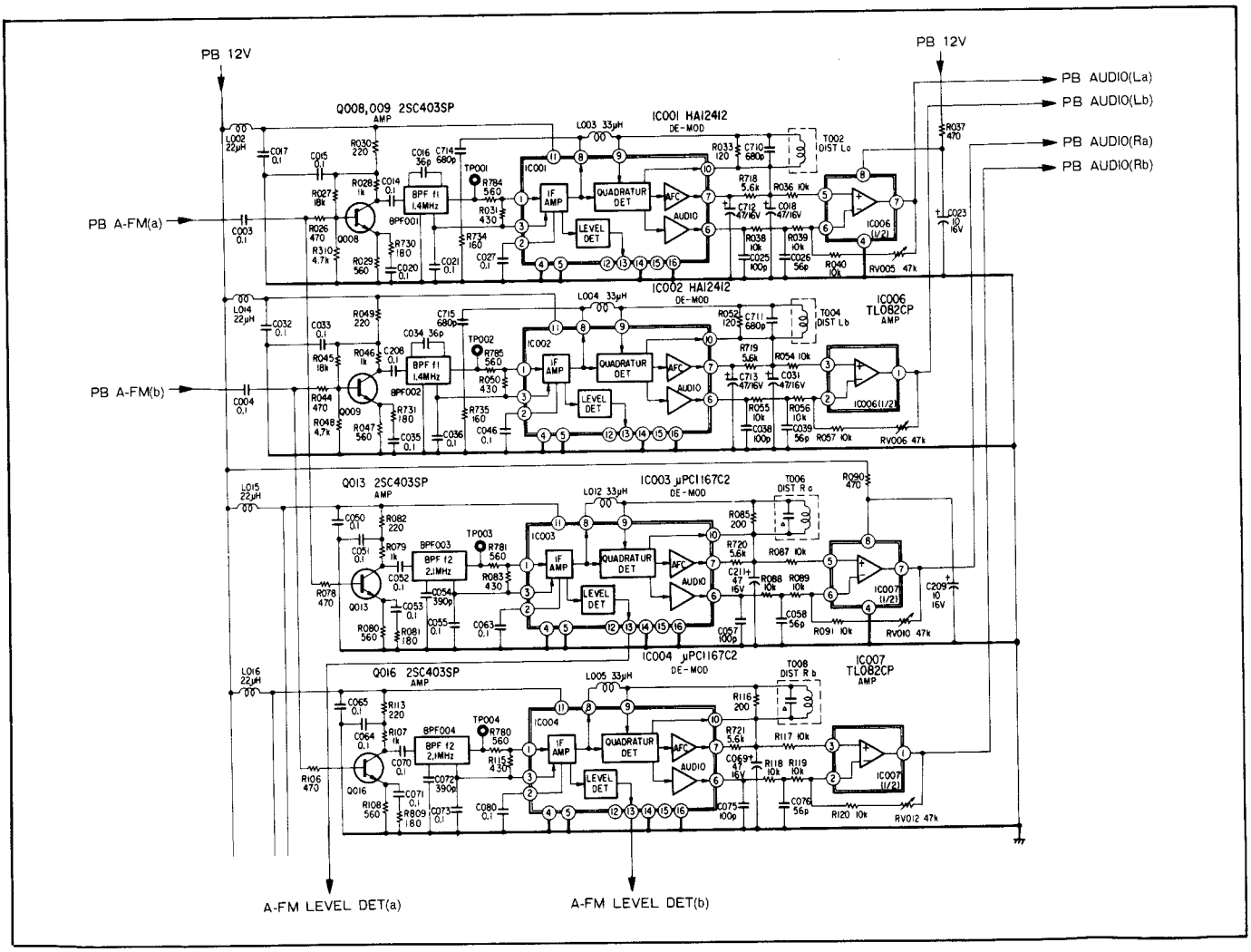

Fig. 4-16 AFM De-Modulation Circuit Diagram

The output signal from pin ⑦ of IC006 is input to LPF001 through pins ① and ② of the switch IC008. The switch IC008 across pins ① and ② is closed by the $\overline{\text{AF PG}}$ signal only during the a-ch period. During the b-ch period in the PB mode, the switch IC008 to which the b-ch L-ch A-FM signal demodulator output (pin ① of IC6) is closed across pins ④ and ③ by the $\overline{\text{AF PG}}$ signal so that the IC pin ⑥ output is input to LPF001 to switch over the a and b channel heads. In this way, the channel heads are switched over after the frequency demodulation, resulting in the head switching noise lower than the corresponding noise in the case of head switching in the stage of the FM signal. In this circuit, also, the $\overline{\text{AF MUTE}}$ signal is used to mute the circuit output during long dropout and during the normal audio period.

The band width of LPF001 for the PB mode is always 20kHz, regardless of the position of the LPF select switch. The signal flowing through LPF001 is input to the dropout compensation circuit consisting of Q705, IC008 pins ⑧ and ⑨ , R322, C229 and Q010. The circuit across pins ⑧ and ⑨ of IC008 is closed by the PB A-FM signal, during the time free from dropouts. When a dropout occurs, and the $\overline{\text{DOC}}$ signal obtained by envelop detecting the A-FM signal (f2) becomes L, the portion across pins ⑧ and ⑨ is opened. As a result, the charge voltage of C229 is applied to Q010 during the dropout period. This type of dropout compensation is the previous value holding type.

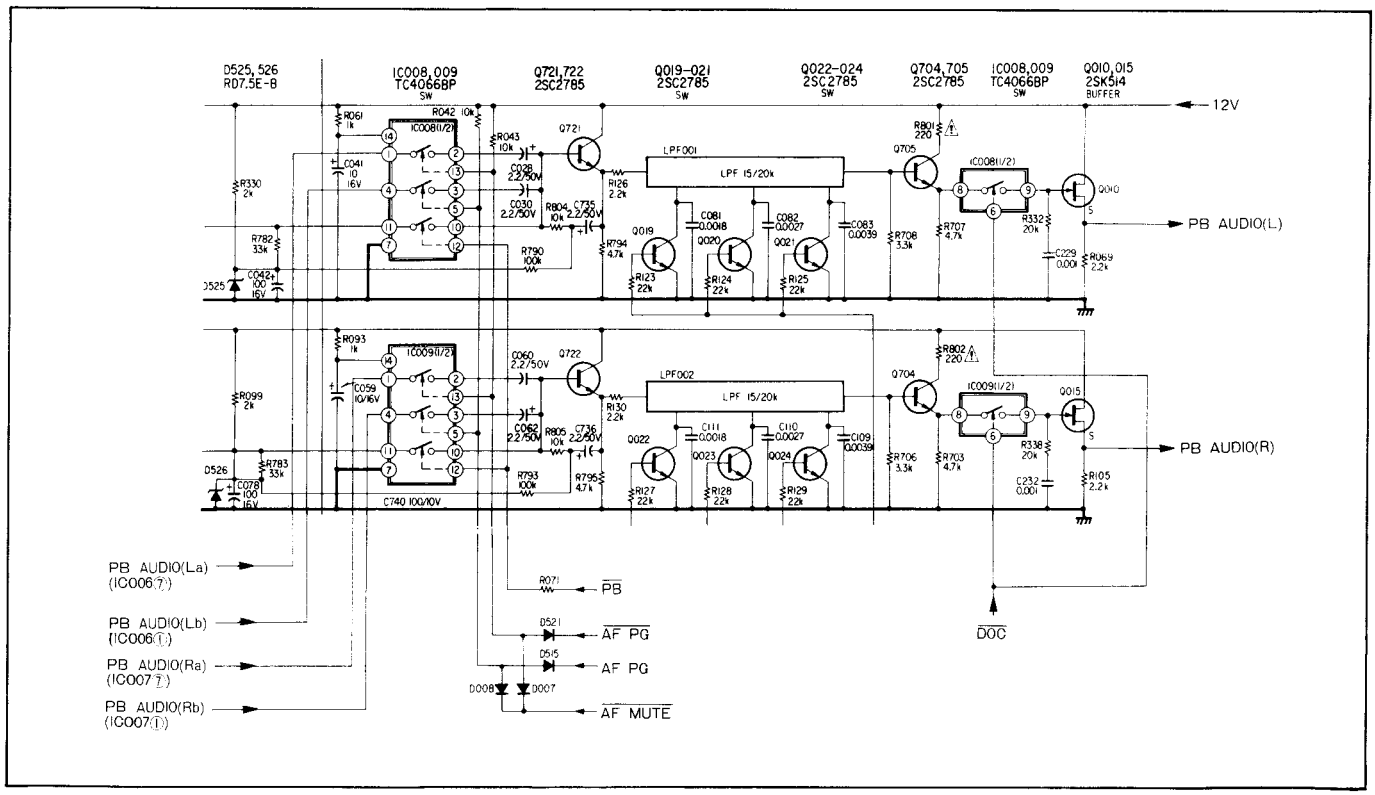

Fig. 4-17 ach, bch Head Select, Muting and Dropout Comp Circuit Diagram

The audio signal output from the dropout compensation circuit is input to the dynamic emphasis circuit IC012 at pin (40) , where it is decoded, and output from pin (27) .

This output is input to IC013 at pin (3) , and is output from pin (1) .

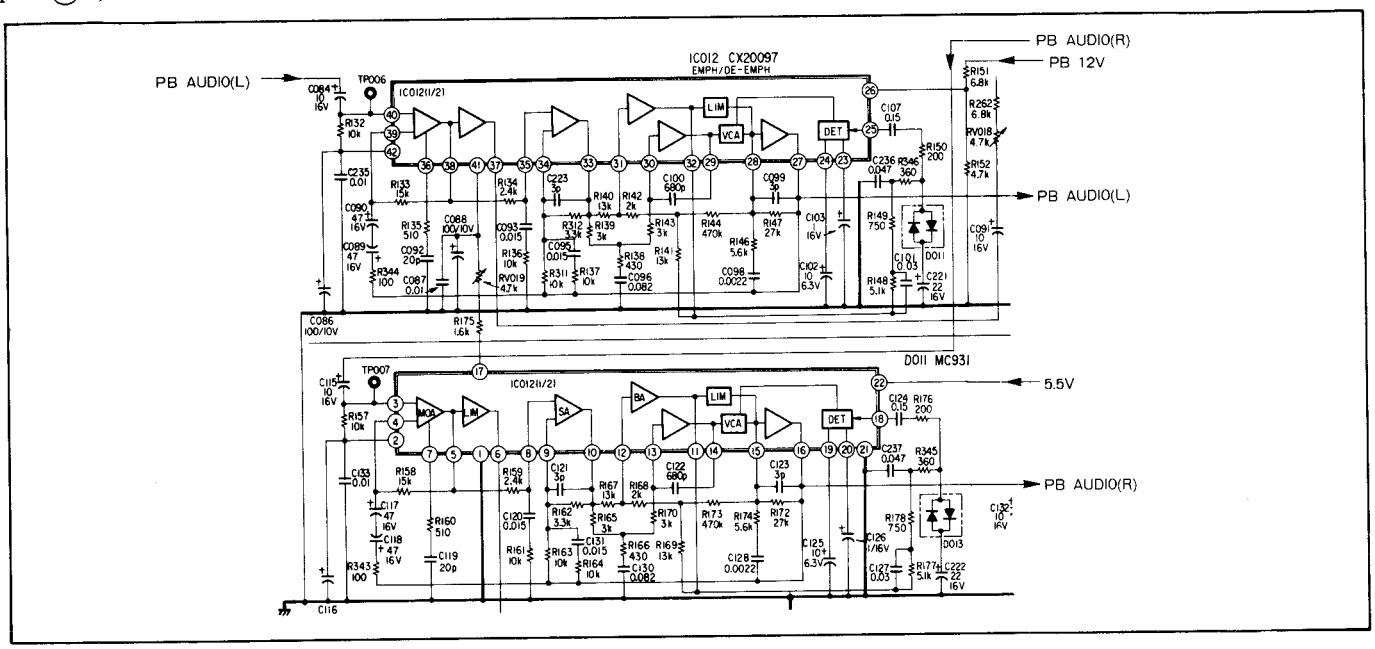

Fig. 4-18 Dinamic Emphasis Circuit Diagram

IC013 amplifies the signal output from pin (27) of IC012 at the standard output level (−26.5dBs) by 16.5dB to bring it to the standard line out output level of −10dBs. The output signal from pin (1) of IC013 is input to IC014 at pins (11) , (12) and (14) , and output from pin (13) . In IC014, the β HiFi mode and the normal audio mode are automatically switched over by the AF DET signal. That is, while a tape other than β HiFi is being played back, the normal audio signal input to pin (15) is output from pin (13) . In the IC014, also muting takes place when a muting signal is input to pin (6) . The audio signal output from pin (13) of IC014 is output to the LINE OUT terminal from pin (3) of CN003, to the headphone output circuit from pin (1) of CN002, and to the level meter from pin (1) of CN001 via the level meter adjusting RV020.

Q701 connected to pin (3) of CN003 also serves to mute noise for more complete muting.

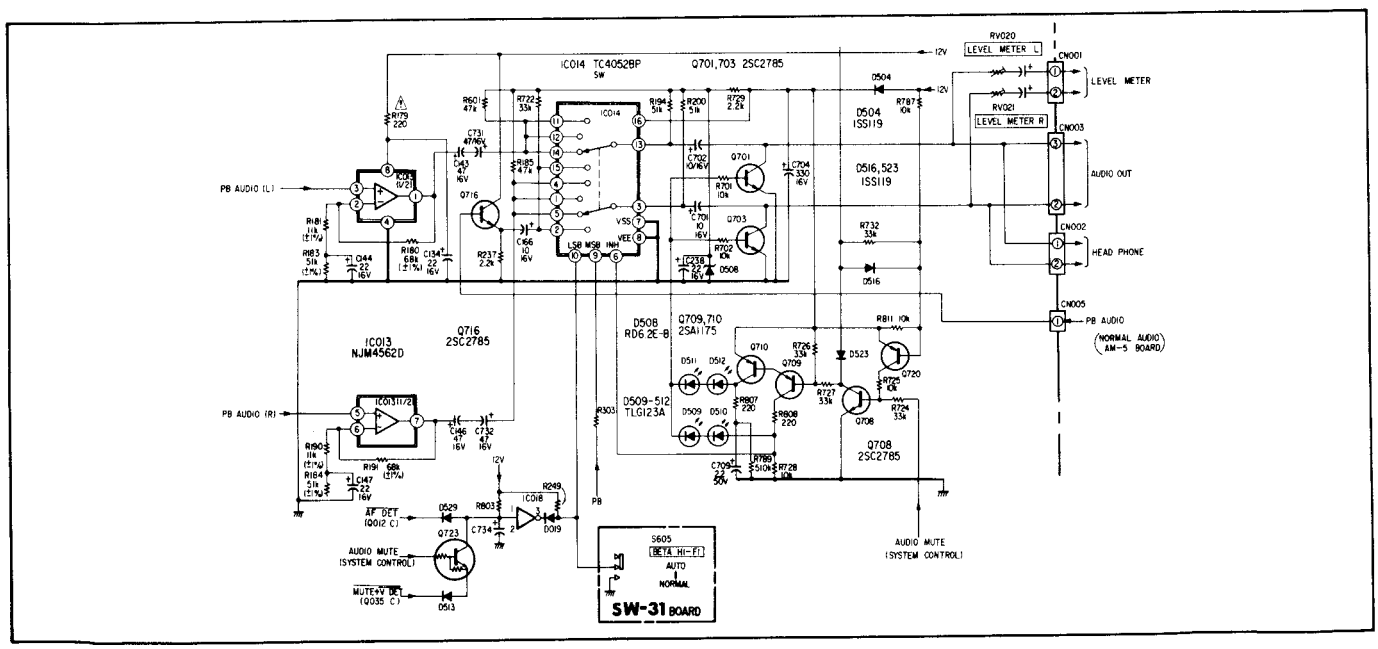

Fig. 4-19 AFM/NORMAL Select and Muting Circuit Diagram

3. Muting Circuit

The audio signal is muted by the AUDIO MUTE signal from the system control, and Q720 mutes noise when the power supply is turned off. At this time, the charge stored in C704 is used as the power for this muting operation.

D509 through D512 serve to block current from flowing from the base to the collector when the collector voltage becomes lower by the audio signal in Q701 or Q702 during muting. In this case, the large forward voltage (approx. 1.8V) of LED is utilized so that even when the large audio signal is applied to the collector of Q701 or Q702, current flow is prevented to avoid distorting the audio signal.

4. Dropout Detection Circuit

To detect dropout, the f2 signal with the higher frequency is used. The f2 signal reproduced by the a-ch head is input to IC003 through pin ① , and output from pin ⑬ after envelope detection. This output is input to the comparator IC5 at the negative input pin ⑥ via the buffer Q714. On the other hand, to the positive input pin ⑤ , the reference voltage is input, so that when a dropout occurs in the f2 signal, and the negative input voltage falls below the reference voltage, the comparator output level at pin ⑦ becomes H. This reference voltage is obtained from the f2 envelope detection output (Q714 emitter) taken out only during the no-signal period while the a-ch head is not in contact with the tape, during which Q712 is turned on by the $\overline{\text{AF PG}}$ signal, and smoothed by C724. By this method of setting the reference voltage, errors in dropout detection by noise fluctuation, etc. in the PB amp can be prevented. The dropout descrimination level of this dropout detection circuit is set at the level −15.3dB below the Y-FM signal level. In this way, as long as the tapes recorded and played back by the same equipment, muting by low Y-FM signal level is avoided, regardless of the tracking control knob position.

The output from pin ⑦ of the comparator IC5 is input to the Q711 base to which also the b-ch head dropout detection output (IC5 pin ①) is input, and these two signals are selected by the $\overline{\text{AFPG}}$ signal and the $\overline{\text{AFPG}}$ signal. The dropout detection output is divided into threeroutes via Q711.

One route goes through Q706 and pins ⑨ and ⑩ of IC018 to the previous value holding type dropout compensation circuit. This circuit is used only for short dropout up to several hundreds μsec. ($\overline{\text{DOC}}$ signal)

The second route goes to the a/b channel head select switch (IC008, IC009) via D505, Q707, and pins ⑧ and ⑩ of IC019, to turn off both a-ch and b-ch sides to mute the β HiFi PB signal. This circuit operates at comparatively long dropouts above several hundreds μsecs. ($\overline{\text{AF MUTE}}$ signal)

The last route goes to Q012 to send the switching signal between the β HiFi mode and the normal mode. This circuit responds to the absence of the Y-FM signal for approximately 2 seconds, and switches the system from the β HiFi mode to the normal mode. ($\overline{\text{AF DET}}$ signal)

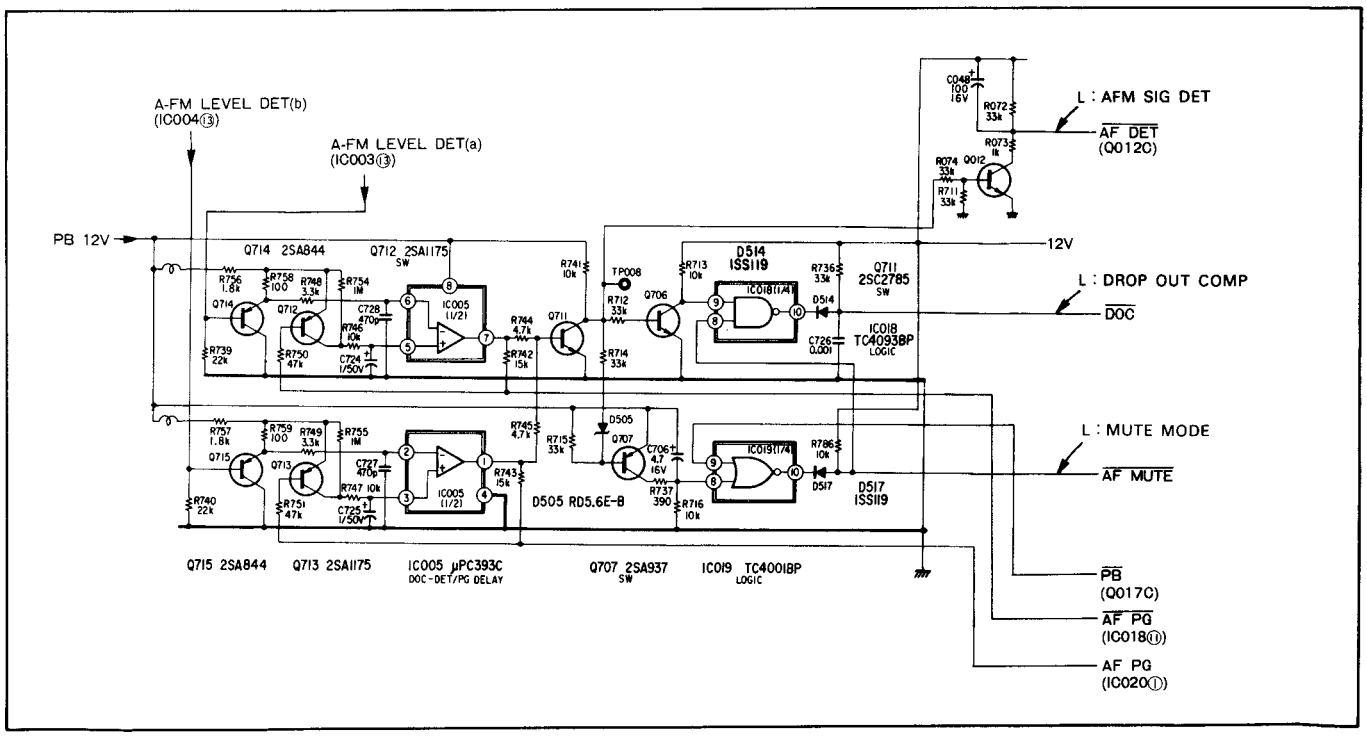

Fig. 4-20 Dropout Det and AFM Signal Det Circuit Diagram

4-2. Normal Audio Circuit

The basic operation of the normal audio circuit is the same with the audio circuit of the SL-C30 Series, with the main exceptions given below.

1. Input Selection

Since the selection of inputs is executed by the β HiFi circuit, the normal audio circuit is not required to do it. The audio input level to the normal audio circuit is −22dBs (pin ② of CN501). (Reference input: −10dBs)

2. E-E Audio Signal

The audio signal (E-E audio signal) from pin ⑩ of IC501 is input to the β HiFi audio circuit via pin ① of CN501 for the E-E and REC modes. However, the E-E audio signal of the β HiFi audio circuit is output from the VTR audio output terminal, and the E-E audio signal of the normal audio circuit is not output.
This means, that the normal audio circuit audio signal is output from the audio output terminal of the VTR only during the normal audio playback mode.
The audio output level of the normal audio circuit is −10dBs (pin ① of CN501). (Reference input: −10dBs)

3. AUDIO Mute 2 Signal

Only the AUDIO MUTE 2 signal is input to the normal audio circuit. Therefore, muting by other muting signals is performed only by the β HiFi audio circuit.
Q512 and Q513 constitute a level shift circuit which shifts up the muting voltage for more accurate muting operation.

5. TIMER CIRCUIT

The basic operation of the timer circuit is the same as the SL-C30 Series except for the following.

5-1. $\overline{IR}$ Signal

The $\overline{IR}$ signal (CN102 pin ②) from the remote commander is input to IC101, and at the same time output to the tuner circuit.
This is for the management of tuner-related commands on the tuner side. As the result, the $\overline{PR\ DOWN}$ signal used with the SL-C30 Series is not any more used by the timer IC (IC101) for tuner control, and has been eliminated.

5-2. AV CONT Signal

The TV/VTR select button (TM-55 board, S201) can control the TV connected to the AV connector.
When the pin ③ of IC101 (AV CONT signal) is set to H by the TV/VTR button, the video signal, audio signal and the control signal are output from the AV connector to the TV. At the same time, Q104 lights D201 to indicate the VTR mode. When the TV/VTR button is pushed again, pin ③ of IC101 becomes L, the AV connector output no signal, D201 goes out and the TV mode is restored. While the VTR is in the PB mode, pin ③ of IC101 is forced to H (VTR mode), and IC101 refuses button signals from the TV/VTR button.

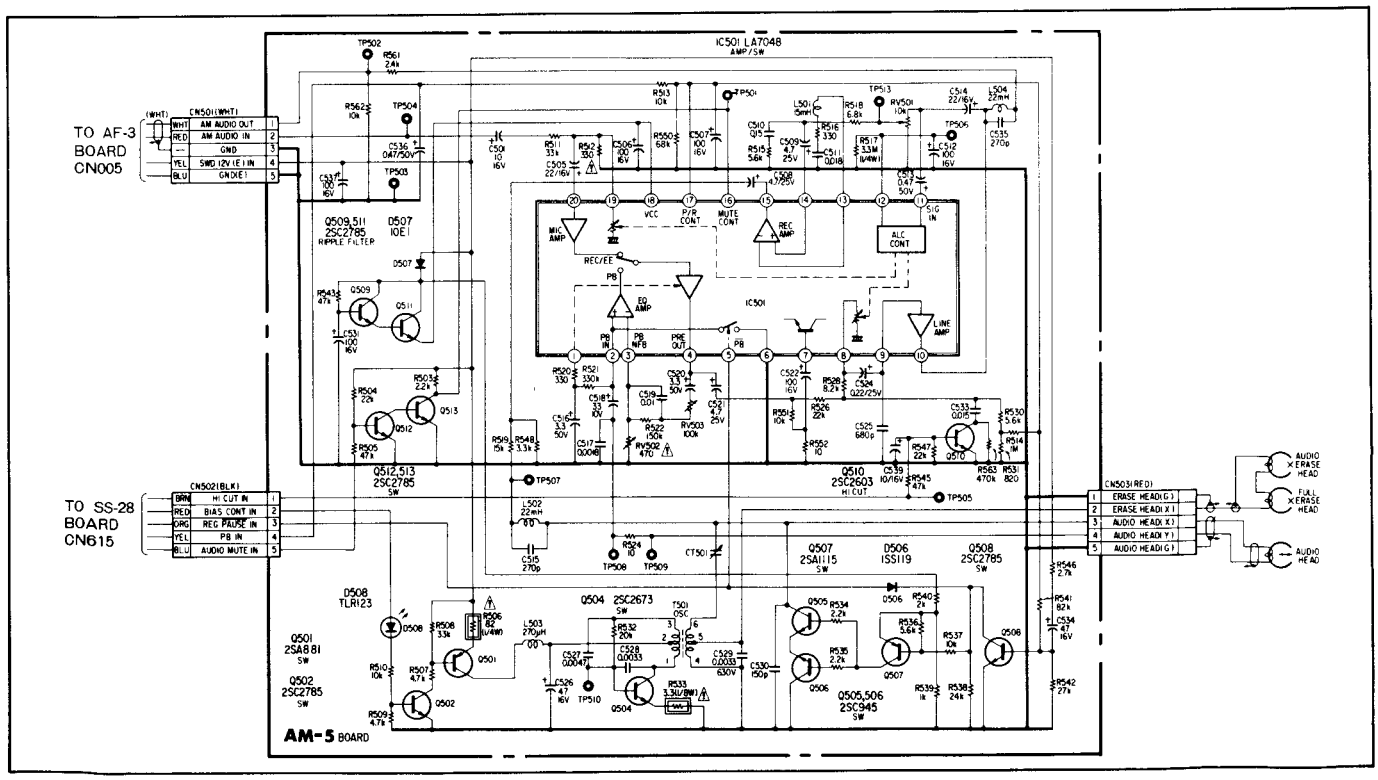

Fig. 4-21 Normal Audio Circuit Diagram

6. TUNER CIRCUIT . . . < >: SL-HF100ES/EC/AS Model

6-1. Signal System

The broadcast signals input from the AERIAL IN terminal are amplified approximately 4dB by the RFU (RF modulator, booster, and mixer) and are input to the RF input terminal of the tuner (sensitivity select switch: DX position).

The broadcast signals are output from the IF output terminal after being tuned, amplified, and frequency converted by the tuner. Each of the signals has three frequency components, namely, 38.9MHz as a picture carrier (f_P), 33.4MHz as a sound carrier (f_{S1}), and 33.158-MHz as other sound carrier (f_{S2} : only when receiving voice multiplex broadcast).

The signals are amplified by a preamplifier comprising Q001, T001 <T002> and T002 <T003> and are spectrum shaped by a surface acoustic wave filter (SAWF) SWF001. Each signal is divided here into two parts. One is a picture signal and is input to pins ① and ⑯ of IC001. <The other is a voice signal and is input to pins ① and ⑱ of IC002.> The signal input to pins ① and ⑯ of IC001 is after amplified by the VIF AMP and is output from pin ⑫ of IC001 as a video signal after being SYNC filtered. The video signal is output to the video circuit through the voice trap CT001 (SL-HF100UB 6.0MHz) (5.5MHz is attenuated approximately 50dB) and buffer Q002.

Pin ③ of IC001 is an input terminal for the voltage to set the RF AGC delay point. The RF AGC voltage is output to the tuner from pin ④. Pins ⑤ and ⑥ are output terminals for AFT signals. Pins ⑤ and ⑥ have inverse characteristics, and this equipment uses pin ⑤ only.

T004 connected to pin ⑧ and ⑨ is a VIF transformer. T005 connected to pins ⑦ and ⑩ is an AFT transformer. <The signal input to pins ① and ⑱ of the other IC, IC002, is amplified, is SYNC filtered, and is output from pin ⑭ as an SIF signal. This SIF signal is composed of a 5.5MHz component obtained by frequency converting f_{S1} and of a 5.742MHz component obtained by frequency converting f_{S2}.

T007 comprising pins ⑨ and ⑩ extracts f_P (picture carrier) from the amplified SWF001 output signal and uses it as a carrier for SYNC filtering. The SIF signal output from pin ⑭ of IC002 is divided into two. The other signal is fed to the 5.5MHz ceramic filter CF001 and is input to pin ⑫ of IC002, to be output from pin ⑥ after being amplified by the SIF AMP and is FM filtered (quadrature filter). This is the main audio signal. The main audio signal is input to pin ① of IC003 through RV002 for stereo balance adjustment and is input to the matrix circuit inside the IC. T006 comprising pins ⑦ and ⑧ of IC002 is a 90° phase shifting circuit for FM filtering.

The other signal is fed to the ceramic filter CF002 at 5.742MHz and is input to pin ㉘ of IC003, becoming a sub audio signal to be input to the matrix circuit, after being amplified by the SIF AMP and FM filtered. Needless to say, this SIF signal at 5.742MHz is not broadcast in normal broadcast programs (broadcasts with only f_{S1} sound carrier).

Pins ㉓ and ㉔ of IC003 is a tuning circuit for FM filtering. The FM filtering output can also be input to the pilot signal filtering circuit. The pilot carrier is extracted by the SYNC circuit T009 at 54.69kHz connected to pins ㉑ and ㉒ , is amplified, and is AM filtered. The filtering output is output from pin ⑲ of IC003. Part of this filtering output is returned to pin ⑱ through the low-pass filter and is used for AGC.

The filtering output (pilot signal) from pin ⑲ is shown in Table 6-1 in accordance with the broadcasting modes.

Broadcasting Mode	Broadcasting Contents		Pilot Signal
	Channel A (MAIN)	Channel B (SUB)	
MONO	MONO 1	MONO 1	0Hz
STEREO	$\frac{L+R}{2}$	R	117.5Hz
BILINGUAL	MONO 1	MONO 2	274.1Hz

Table 6-1

The filtering output (pilot signal) from pin ⑲ is input to pins ② and ⑥ of IC004. Pins ① , ② , and ③ of IC004 comprise a 117.5Hz band pass filter, and pins ⑤ , ⑥ , and ⑦ , a 274.1Hz band pass filter.

The output of the 117.5Hz band pass filter (pin ① of IC004) is input to the level detector Q301. The output of the 274.1Hz band pass filter (pin ⑦ of IC004) is input to the level detectors Q302 and Q303. The Q303 detection output is input to pin ⑰ of IC003. The detection output of Q301 and Q302 is added and is input to pin ⑭ of IC003.

Table 6-2 shows the levels of pins ⑭ and ⑰ in accordance with the broadcast mode.

*1: LED is lit when the level is "L".
*2: Changed by the bilingual switch.

Broadcast Mode		Pilot Signal	Pin ⑭	Pin ⑰	Pin ⑨*1	Pin ⑩*1
Normal Broadcast (one carrier)		None	L	L	H	H
Voice Multiplex Broadcast (two carriers)	MONO	0Hz	L	L	H	H
	STEREO	117.5Hz	H	L	L	L
	BILINGUAL	274.1Hz	H	H	L/H*2	H/L*2

Table 6-2

The pilot signal filtering output input to pins ⑭ and ⑰ of IC003 is input to the control circuit inside the IC. The $\overline{A}$/B signal from pin ⑪ is also input to this control circuit. This signal selects between channel A (MAIN) and channel B (SUB) during bilingual broadcasts.
The control circuit controls the matrix and switch circuits and produces sound signals in accordance with the broadcast mode using the main and sub sound signals.
The sound signals from the matrix and switch circuits are output to the audio circuit from pins ⑦ (L channel) ⑧ (R channel). Q003 and Q004 mute sound signals.
C029, C030, and C031 at pins ② , ③ , and ④ of IC003 are the de-emphasis devices for R/B, A, and L channels. Pins ⑨ and ⑩ of IC003 contain an LED drive circuit and flashes the LED in accordance with the broadcast mode by the control circuit inside the IC. (See Table 6-2.)>

6-2. Tuning System

Tuning operations are controlled bv IC101. Signals input to and output from IC101 are described below.

(1) OSC IN (Pin ②) and OSC OUT (Pin ③)
These pins are for clock oscillation. A 4MHz ceramic oscillating device is connected to them.

(2) C0 (Pin ⑧), C1 (Pin ⑦), C2 (Pin ⑥), C3 (Pin ⑤), and I/O (Pin ④)
C0 through C3 are control signals from IC101 to IC102 (non-volatile memory). The I/O pin is an input/output pin for tuning data. When presetting the tuner, IC102 memorizes data of broadcasting stations being received (program No., receiving band, VC voltage, and AFC on/off) input from the I/O terminal of IC101 by means of the control signal from IC101. During tuning by the PROG +/– button or by the tuning signals from the timer circuit and remote commander, IC102 inputs program No. from the I/O pin of IC101 bv the control signal received from IC101 and outputs the tuning data (receiving band, VC voltage, and AFC on/off) corresponding to the program No.

(3) PR LOCK (Pin ⑨)
The input signal from the timer circuit. This signal disables changes of the program, etc. during recording (namelv, PROG. UP/DN, RESET, AP, AFT +/–, SEARCH UP/DN, and AFT ON).

(4) $\overline{\text{PR RST}}$ (Pin ⑪) and $\overline{\text{PR UP}}$ (Pin ⑩)
The input signals from the timer circuit. During timer recording, IC101 is reset to Program 1 by the $\overline{\text{PR RST}}$ pulse and is set to Program N when an N-1 quantity of $\overline{\text{PR UP}}$ pulses are subsequently input when the timer microcomputer selects Program N.

(5) PWR (Pin ⑫)
The tuner power supply (12V) output by the Q202 emitter is divided by R201 and R202 and is input to this pin.
IC101 decides the voltage to be the tuner ON mode (mode for the tuner to operate) when the level of the voltage is "H", deciding to be the tuner OFF mode (mode for the tuner not to operate) when the level is "L". IC101 stops the program No. display output and key matrix scan operation when in the tuner OFF mode.

(6) P00 (Pin ⑬), P01 (Pin ⑭), P02 (Pin ⑮), P03 (Pin ㊶), P10 (Pin ㊵), and P11 (Pin ㊴)
The output signals to the timer circuit for program No. display. With signals P00 – P03, one digit of program No. display is output in a BCD code. With signals P10 – P11, the place of ten of program No. is output.

(7) SYNC (Pin ⑯)
The input signal from the video circuit. The SYNC signal separated from the video signal in the video circuit is input. In the tuner mode, IC101 decides broadcast signals have been received when this signal is input during search or auto program operation.
In modes other than the tuner mode, IC101 decides whether the mode is the ordinary record mode to record pictures and voice or the sound record mode to record only voice without recording pictures based on this signal.

(8) K0 (Pin ⑳), K1 (Pin ⑲), K2 (Pin ⑱), K3 (Pin ⑰), Sa (Pin ㉔), Sb (Pin ㉕), Sc (Pin ㉖), and Sd (Pin ㉗)
K0 through K3 are input signals for key matrix scan. Sa through Sd are output signals for the key matrix scan. Table 6-3 shows the preset switch matrix table.

	Sa	Sb	Sc	Sd
K0	30 PROG	PROG +	FINE –	
K1	4 BAND	PROG –	FINE +	AFT
K2	1 BAND		SEARCH –	RESET
K3	2 BAND		SEARCH +	AUTOMATIC PROGRAMMING

Table 6-3

The Sa output port is a switch to change the function depending on the destinations.

30 PROG. .Connecting the ports Sa and K0 by a diode, the equipment can receive and display 30 programs. (No applicable models at present)

4 BAND . .Connecting the ports Sa and K1 by a diode, the equipment can receive and display four bands (CATV). The 30-program version can automatically be set up at this time without connecting Port Sa with Port K0 by a diode. (For SL-HF100EC model)

1 BAND. . .A one-band version is set up connecting Port Sa with Port K2 by a diode. (For SL-HF100UB model)

2 BAND. . .A two-band version is set up connecting Port Sa with Port K3 by a diode. (For SL-HF100SA model)

All the other switches have the same functions as those of conventional models. As a new function of this model, presetting of AFT to ON or OFF is possible. Presetting after pressing the FINE button, the mode is memorized as AFT OFF.

(9) $\overline{\text{RST}}$ (Pin ㉓)

Input is made when an INITIAL RESET pulse from Q103 switches on the MAIN POWER SW.

(10) SD (Pin ㉙)

The signal flashes LED D103 to show that the equipment is in operation when the set is in the SEARCH mode. During this mode, the program No. display also flashes at the same time.

(11) AFT ON (Pin ㉚)

D104 is lit during the AFT ON mode.

(12) MUTE ($\overline{\text{V DET}}$) (Pin ㉛)

This is an output signal.

[Tuner ON Mode] PWR (Pin ⑫) . . . "H"

The sound-signal muting signal when changing the program or in other cases. Muting is performed by Q003 and Q004.

[Tuner OFF Mode] PWR (Pin ⑫) . . . "L"

IC101 detects the presence of a video signal by detecting whether or not there is a SYNC signal (Pin ⑯). The level of the MUTE ($\overline{\text{V DET}}$) signal becomes "L" when a SYNC signal is input. The β HiFi audio circuit discriminates the record mode (whether both pictures and voice are recorded, or whether only voice is recorded) of the replay tape by this signal.

(13) B1 (Pin ㉝) and B2 (Pin ㉜)

The signals to change the receiving band. These signals are decoded in IC103 and are input to the tuner. IC103 also lights the band display LEDs (D105 – D107).

SIGNAL / BAND	B1	B2	I	III	U	III'*1
VHF I	H	H	+12V	−12V	0V	−12V
VHF III	L	H	+12V	+12V	0V	−12V
UHF	H	L	0V	−12V	+12V	−12V
CATV *1	L	L	+12V	+12V	0V	+12V

*1 : Used with the EC model only.

Table 6-4

(14) AFT (Pin ㊲) and REF (Pin ㊱)

The AFT pin is input with the AFT detection output of IC001. The REF pin is input with a reference voltage (a voltage obtained by dividing 12V by R207 and R206) to judge the polarity of AFT. When the AFT is ON, IC101 judges whether the received frequency is shifted toward +, or toward −, by these two input signals and controls the VC voltage to cancel the deviation.

The AFT is turned OFF by pressing the FINE button, turning ON by pressing the AFT button.

(15) $\overline{\text{IR}}$ (Pin ㊳)

The input signal from the remote commander.

IC101 accepts only those commands that are related to the tuner.

(16) $\overline{\text{D/A}}$ (Pin ㊷)

The $\overline{\text{D/A}}$ pin outputs the VC voltage with pulse-width modulated by a frequency at approximately 7.8kHz. A VC voltage is obtained by switching a DC voltage of 33V stabilized by IC201 and passing it through a low-pass filter composed of R116 and C106 after applying this signal to the Q101 base. Q102 is an active filter to remove ripple components in the VC voltage.

6-3. Other Circuits

Q201 and Q202 switch on and off the tuner power by the TU EE signal input from the video circuit. The tuner power is output from the Q202 collector only when the input selector is set to the TUNER position (when the level of the TU EE signal is "H") in the RECORD or EE mode.

Q203 mutes the tuner audio signal by turning Q003 <Q004> on when the level of the TU EE signal is "L".

7. POWER SUPPLY CIRCUIT

7-1. Rectifier Circuit

When SW601 is turned on, the supply AC power enters through F601, through the line filter L601, and is rectified by D601 and C609.
L601 is for preventing the switching noise from leaking outside. R601 is for discharging C601 and C606 to prevent electric shocking when touching the AC plug. R602 protects D601 from the rush current into C609 upon switching of SW601 by restricting the rush current.

7-2. Start Circuit

The power supply circuit is started through the repetition (self-oscillation) of the following 1) and 2) states.

1) Q601 is turned on by the base bias current flowing through R603 and R604, and the current flowing from the collector to the emitter of Q601 further flows through T601 from pin ⑬ to pin ⑪ , and enters C610 and C611.
   As a result, positive voltage develops at pins ④ and ⑤ and negative voltage at pins ⑥ and ⑦ on the secondary side of T601. The positive voltage at pins ④ and ⑤ causes current to flow through R623, C625, R624, C626, pins ⑤ and ⑥ of T602, R629, and C631 to the ground. Here, R623, C625, R624 and C626 constitute the feedback circuit for self-oscillation.
   As a result, positive voltage is developed across pins ④ and ③ , and negative voltage across pins ② and ① of the secondary side of T602.
   The positive voltage across pins ④ and ③ causes bias current to flow to the Q601 base via C612 and R607 to maintain Q601 in the on state. This state continues until C612 will be fully charged and the Q601 base current stops.
2) When Q602 is turned on by the base bias current via R605 and R608, the charged voltage of C610 and C611 causes current to flow from pin ⑪ of T601 through pin ⑬ from the collector to the emitter of Q602
   As a result, voltage opposite to the state 1) is generated in the secondary side of T601, and also in the secondary side of T602. As a result, positive voltage is generated across pins ② and ① of T602, causing a bias current to flow through the Q602 base to keep Q602 on until C613 will be fully charged.
   When states 1) and 2) alternate by self-oscillation, square waves are produced at pins ⑥ , ⑦ and ④ , ⑤ of T601, and these square waves are rectified by D621, D622, D641 and C628.
   The rectified voltage is stabilized by Q621 and D624, and is supplied to pin ⑫ as the supply power of IC621. Then, IC621 starts to operate. The incorporated oscillator turns on the incorporated transistors connected to pins ⑪ and ⑧ alternately causing current to flow alternately from pin ⑥ to pin ⑤ and from pins ⑥ to ⑦ of T602.
   As a result, positive pulses are generated across pins ② and ① or across pins ④ and ③ , the secondary side of the T602 to turn Q602 and Q601 alternately on and off. This is how the switching regulator starts operation. The operation up to the start of IC621 is self-oscillation, and the alternate turning on and off of Q601 and Q602 by IC621 are "IC controlled oscillation". The oscillation frequency of IC621 is determined by C632 connected to pin ⑤ and R631 connected to pin ⑥ .
   Q603 discharges C612 of the charge accumulated while Q601 is on, while it is off. The function of Q604 is similar to this. D626 and D627 are inserted to prevent the IC621 protecting C627 and R630 from adversely influencing the self-oscillation. Since the self-oscillation voltage at pins ⑤ and ⑥ of T602 is below 4.3Vp-p, the influence of C627 and R630 is eliminated by D626 and D627.

7-3. Self-Oscillation Stop Circuit

Q622, R627, R628 and R625 form the self-oscillation stop circuit. C628 is charged by the peak voltage of the D621 rectified output (positive pulse) over D622.
The D621 rectified output peak voltage is divided by R627 and R628 and input to the Q622 base.
During the self-oscillation, when the D621 rectified output peak voltage falls below 16V, the Q622 base voltage falls below 10V. The Q622 emitter voltage (output of regulator Q621) becomes higher than the base voltage, and Q622 is turned off. During operation of the IC controlled oscillation, the peak voltage is approximately 50V (when supply is 220V AC). Since approximately 12V is applied to the Q622 emitter through D628, the base voltage is higher, and Q622 is turned on. As a result, the feedback loop consisting of R623, C625, R624, and C626 is broken by Q622, because the voltage level across C625 and R624 is clamped at the Q622 emitter voltage level, self-oscillation stops. At this time, since the emitter voltage (approx. 12V) is higher than the base voltage (approx. 10V) of Q621, it is also turned off.

7-4. Power Supply Control Circuit

This circuit turns on and off the switching power such as SW12V and SW9V under the control of the $\overline{\text{POWER ON}}$ signal input to the Q624 base.
While the VTR is in the STAND-BY mode, the $\overline{\text{POWER ON}}$ signal (CN005 pin ⑤) from the TIMER/REMOTE CONTROL circuit is 5V.
Since the voltage of the Q624 emitter is approximately 3.4V resulting from the 12V (UN 12V) by division by R644 and R645, the base voltage is higher, and Q624 is kept off. No bias current flows to Q623, and it and RY621 are both remain off.
When ON/STAND-BY button is pushed, $\overline{\text{POWER ON}}$ signal becomes 0V, Q624 is turned on, and its collector

becomes approximately 3.4V. Now, charging current flows to C636 through R644, Q624 and Q623, Q623 is turned on, RY621 is turned on, and through it, SW12V is output. When C636 is fully charged, the charging current stops, and Q623 receives bias current by R640 and R641 connected to SW12V, and RY621 is kept on.

7-5. Control Circuit

IC621 controls the output voltages of the main power lines (UN 12V, SW12V), and also detects overcurrent and overvoltage.

1. Control of Output Voltage

To pin ① of IC621, the voltage divided by R635 and the combination of R636 and RV621 from the rectified output voltage of D621 through L621 is input.
To pin ② of IC621, the reference voltage REF5V from pin ⑭ of IC621 is input via R633.
The error amp incorporated in IC621 and connected to pins ① and ② compares these two voltage, and R634 and C633 connected across pins ② and ③ of IC621 set the gain of the error amp. IC621 changes the pulse width of the ON-pulses (for turning on Q601 or Q602) output from pins ⑪ and ⑧ in accordance with the error amp output, to control the D621 rectification output voltage at a constant level.

2. Overcurrent Detection

The error amp incorporated in IC621 and connected to pins ⑮ and ⑯ detects overcurrent. Negative voltage occurs at the T601 side terminal of R622 in accordance with the D621 rectification output current. This negative voltage is input to IC621 through pin ⑮ via R639. Since pin ⑮ is subject to a positive bias voltage through R638, a voltage of pin ⑮ is normally positive.
Since pin ⑯ of IC621 is grounded, normally, the output of this overcurrent detection amp is negative, and the output of the output voltage control error amp connected to pins ① and ② has the priority.
When the output current of the D621 rectifier increases (above 7 A) for some causes, the negative voltage at R622 increases and IC621 pin ⑮ becomes negative. As the result, the overcurrent detection amp outputs positive voltage and the width of the on-pulse output from pins ⑧ and ⑪ of IC621 is made narrow. The D621 rectification output current is reduced and the circuit is protected.

3. Overvoltage Detection

D629 is used to detect overvoltage. Normally, to pin ④ of IC621, 0.26V obtained by voltage division by R637 and R632 from REF 5V is applied.
When the D621 rectification output voltage increases abnormally and the D629 cathode voltage rises above 13V, the voltage of IC621 pin ④ also starts to rise. Here, the maximum pulse width of the on-pulses output from pins ⑧ and ⑪ of IC621 is controlled by the voltage at pin ④ between 0 and 100% as the voltage is adjusted from 5 to 0V.
In this way, as the voltage of pin ④ rises, the maximum pulse width of the on-pulses becomes narrow, and as a result, the D621 rectification output voltage is kept below a specified level.

4. Other Power Supply Output

SW9V is obtained from the 12V power (SW12V) through RY621 by reduction by the regulator Q627 to 9V.
SW5.2V is obtained similarly from the 12V voltage through RY621 by reduction by Q626.
UN6.2V is obtained from the D621 rectification output (UN 12V) through L621 by reduction by Q625 to 6.2V.
UN42V, UN30V and AC3.2V are obtained from the D621 rectification output through L621 by conversion to the respective voltages by the DC-DC converter consisting of IC1 and T1 on the D board.

5. Power Circuit Protection in Power Output Terminal Shorting

When the UN12V output terminal is shorted, large current flows through R622, and as the result, the overcurrent detection circuit is tripped to stop the oscillation of IC621.
When the output terminals of SW12V (E) or SW12V (M) are shorted, the Q623 bias current is lost, and RY621 is turned off.
When SW9V or SW5.2V output terminal is shorted, the Q632 bias current is cut off by D631 or D632 to turn off RY621.
When the output terminal of UN42V or UN30V is shorted, the voltage of the UN42V supply drops to reduce the voltage (reference voltage) at pin ⑭ of IC1 by D3 on the D board to stop the oscillation of IC1.